CITY OF MARICOPA

Design Standards Manual

APPENDIX

2020

TABLE OF CONTENTS

APPENDIX A	STANDARD PLAN NOTES
APPENDIX B	STANDARD PLANS AND ROADWAY DETAILS
APPENDIX C	PLAN SUBMITTAL CHECKLISTS AND GUIDELINES SWPPP
APPENDIX D	GUIDANCE CHECKLIST
APPENDIX E	AMENDMENTS TO THE IFC 2012
APPENDIX F	FIRE DEPARTMENT REQUIREMENTS AND INFORMATION FIRE
APPENDIX G	FLOW REQUIREMENTS
APPENDIX H	FIRE DEPARTMENT DETAILS
APPENDIX I	GLOBAL WATER RESOURCES CODE OF PRACTICE SMALL
APPENDIX J	WIRELESS FACILITY DETAILS
APPENDIX K	MS4 REQUIREMENTS
APPENDIX L	STREET NAME CHANGE POLICY
APPENDIX M	CITY OF PHOENIX TRAFFIC BARRIER MANUAL
APPENDIX N	MCDOT PAVEMENT MARKING MANUAL
APPENDIX O	TYPICAL TRAFFIC SIGNAL EQUIPMENT PLACEMENT
APPENDIX P	LANDSCAPING REQUIREMENTS
APPENDIX Q	ROUNDABOUTS
APPENDIX R	APPROVED PRODUCTS LIST
APPENDIX S	ARIZONA PARKWAY - DESIGN GUIDELINE RECOMMENDATIONS

APPENDIX A
STANDARD PLAN NOTES

General Notes: Construction Inspection and Testing

1. All public improvement construction within the public row and onsite shall be conducted in accordance with, and conformance to, the latest edition of the uniform standard specifications for public works construction and uniform standard details for public works construction, both as published by the Maricopa Association of Governments (MAG).

2. Inspection of work per MAG 105.10: the engineer shall be permitted to inspect all materials, and each part or detail of the work at any time for the purpose of expediting and facilitating the progress of work. The engineer shall be furnished with such information and assistance by the contractor, as is required to make a complete and detailed inspection. The city engineer requires that the actual test result data sheet accompany all compaction test results submitted to the city's inspector. Pass/fail statements are not acceptable without the attached data sheet. Failure to submit the test result data sheets will result in an incomplete submittal and the test will be rejected.

3. In the event of conflict between MAG standard specifications and details and these plans, these plans shall prevail.

4. The office of the city engineer shall be notified at least forty-eight (48) hours prior to the commencement of any work within the city of Maricopa row. 520-316-6926.

5. Contractor is to notify all public utilities at least two (2) working days prior to construction, for field locations of their respective facilities, by contacting the following: blue stake: 1-800-782-5348.

6. Contractor shall coordinate and make arrangements for relocation of any utilities conflicting with the proposed construction of these plans, with the appropriate utility.

7. Removal and replacement of all trees, shrubs, vegetation, miscellaneous structures, debris, rubble and other deleterious materials within the limits of construction shall be at the contractor's expense.

8. All concrete sidewalks, driveways, aprons, valley gutter, curbs and gutters, landscaping and irrigation that may be damaged during the course of construction shall be removed and replaced by the contractor at the contractor's expense.

9. Shoring is to be installed or a trench box is to be used, in all trenches in excess of five (5') feet in depth. A registered civil engineer or soils engineer shall certify shoring installation plans, details and specifications. Shoring must conform to osha 29 cfr, part 1926, and subpart d.

10. Compaction testing is required and must be performed in the presence of a representative of the city engineer.

i. The city engineer requires that the actual test result data sheet accompany all compaction test results submitted to the city's inspector. Pass/fail statements are not acceptable without the attached data sheet. Failure to submit the test result data sheets will result in an incomplete submittal and the test will be rejected.

ii. Backfill: backfill within the PUE and public street row, compacted to 95% of maximum theoretical density per ASTM D698. All materials outside the moisture limit shall be considered unsuitable, and subject to removal. No hydraulic compaction or water jet compaction will be allowed. All compaction must be done by mechanical means. Moisture limit specifications: 2.0 percent below optimum moisture, material shall be uniform.

iii. Sub-grade: sub-grade preparation for all new streets and roadways shall consist of scarifying and loosening sub-grade to a depth of six (6") inches. Sub-grade shall be constructed to achieve uniform moisture content by the addition of water and compacted to 95% of maximum density. Moisture shall be maintained between optimum and 4.0% below optimum moisture and shall be compacted to 95% on maximum theoretical density, as determined by ASTM D698. All materials outside the moisture limit at the time of placement and compaction shall be considered unsuitable and subject to removal. The finished surface of the sub-grade shall not vary from the grades established by the city engineer by more than: 0.04 of a foot above or below specified grade.

11. Grading of aggregate bases and aggregate sub-base shall be as follows: aggregate materials shall have water added to them and shall be mixed and processed to produce a uniform blend of material before placement. After processing, the material shall be placed and spread on the prepared sub-grade and shall be placed in a uniform layer or layers not exceeding six (6") inches in compacted depth, unless otherwise approved in writing by the city engineer. Each layer of aggregate base shall be compacted to a density of not less than 100% of the maximum density. The finished surface of the sub-grade shall not vary from the grades established by the city engineer by more than 0.04 of a foot above or below specified grade.

12. Compaction testing for sub-grade will be done after the sub-grade has been string-lined and is within tolerance and accepted by the city engineer. The city engineer or their representative will direct the number and location of density tests. All sub-grades shall have a blue-top elevation set to finished grade at left and right edges of pavement and centerline of roadway.

13. One (1) sand cone test shall be required for every ten (10) nuclear density tests performed, or when requested by the city engineer or their representative. The city engineer or their representative shall determine the locations of these sand cone tests.

14. All materials, including but not limited to aggregate base course, borrow material and native material, will be accepted in-place only. Testing required for acceptance will include a sieve analysis and plasticity index, (p.i.). Determination of maximum theoretical density will be in accordance with ASTM D698. Only a four-point proctor test will be accepted.

15. The base course shall not be placed on sub-grade until the city engineer has accepted the sub-grade. All materials will be accepted in- place only.

16. Compaction densities: MAG type I backfill material (section 601.4.4) is modified to include areas under the pavement, row, and easements for all trenches including sewer, water, electric, and gas, telephone, and storm drains, moisture spec. 2.0 percent below optimum moisture compact to 95% of maximum theoretical density. All materials outside the moisture spec-limit shall be considered unsuitable, subject to removal and material shall be uniform.

17. The location of all sewer stub-outs shall be stamped on the top of vertical curb, and face of rolled curbs, with four (4") inch high letters (ie: 's').

18. All curb, gutter and sidewalk shall be filled with expansion joint filler, ½" bituminous pre-molded strips. All expansion joint spacing shall not exceed a maximum of (50') feet or as directed by the city engineer. Contraction joint spacing shall be every five (5) feet or as directed by the city engineer. Concrete curing compound material shall be a white pigment membrane used on all concrete structures including curb & gutter, sidewalk, headwall, catch basins and sidewalk ramps.

19. Paving will not commence until aggregate base course compaction and gradation tests are completed and the city engineer accepts the results.

20. USPS cluster mail box locations must be pre-determined and noted on the civil plans for grading and paving. Add cluster boxes to the legend and in construction notes. Cluster box locations should be shown on the "overall sewer/water/hydrant/streetlight plan."

21. Median curb & gutter bull nose shall be painted yellow, with reflective glass beads, per MAG dtl-223, and have yellow pavement reflectors installed after the painting is complete.

Grading Notes:

1. Site area: _____ net acres.
2. Approved final drainage report: BY: _____, DATED: _____, _____. JOB NUMBER: # _____.
3. Approved geo-technical report: BY:_____ _____, DATED: _____, _____. JOB NUMBER: #_____.
4. The contractor is responsible for complying with all necessary regulations and requests by the City and Pinal County regarding dust control.
5. Removal of all cacti and native plants shall be in accordance with the provisions of the "Arizona Native Plant Law" A.R.S. Chapter 7.
6. Contractor must keep public streets clear of soil, mud, and debris at all times.
7. Contractor must prevent damage to drainage during grading construction.
8. Contractor must repair any damage to public or private property that results from work done under the approval of the Grading permit.
9. If site grading totals more than one-tenth (0.1) acre, Contractor must obtain a Pinal County Dust Control Permit. If grading exceeds one (1.0) acre, this activates AZPDES and Contractor must submit a NOI to ADEQ and prepare a Storm Water Management Plan acceptable to ADEQ.
10. All on-site grading must comply with Chapter 70 of the Uniform Building Code.
11. All grading in the public ROW must comply with MAG Specifications and Standard Details; the engineer's approved plans and specifications for the project; and the soils engineer's geotechnical report for the project.
12. Surveyors will set construction stations, stakes, establishing lines and grades for roads, curbs, gutters, sidewalks, structures and centerlines for utilities and necessary appurtenances as they may deem necessary, they will furnish the contractor with all necessary information relating to the grades. These stakes and marks shall constitute the field control, by and in accordance with, which the contractor shall establish other necessary controls to perform the work. The contractor shall be held responsible for the preservation of all stakes and marks, and if the contractor has carelessly or willfully destroyed the construction stakes or marks, the cost for replacing them will be charged against him.
13. No minimum floor elevation shall be lowered unless approved by the City Engineer.
14. Any slope that is steeper than 3:1 shall be rip-rapped or shall be revegetated.
15. ROW grading shall be completed prior to the final walk-through and shall be held two (2) inch below back of walk (B/W) or top of curb (T/C).

16. The contractor shall provide a level bottom (+/- 0.10') in all retention basins, at the elevations shown on the plans. Retention basin side slopes shall not exceed 4:1, unless approved by the City Engineer and noted on the plans.
17. Retention basin percolation tests shall be performed after grading is completed and prior to landscaping. Percolation tests shall be submitted to the City Engineer. Recommendations regarding number of drywells required to meet the requirements of the City Code will be presented to the City Engineer for approval, and the final number of drywells required shall be determined by these tests. After the first drywell installation, a constant head pressure test will be required. The design engineer shall provide the total number of drywells required and submit the calculations to the City Engineer. Drywells require a permit from the Arizona Department of Environmental Quality and Arizona Department of Environmental Quality drywall registration numbers shall be noted on the as-built plans.
18. GRADING PLAN AS-BUILTS: As-Built certification of the on-site grading by the design engineer is required prior to final acceptance of any on-site grading or drainage improvements. As-built drawings of the public improvements by the design engineer are required prior to final acceptance of the public improvements. As-built grading plans shall be prepared by the design engineer after grading is completed. These shall include but not be limited to, as-built elevations for: finished pads, all rear property corners, top of curb at all property lines, retention basin bottoms, swales, berms and perimeter landscape easements, any and all deviations from the approved plans at the time of completion of mass grading. If any drywells have been installed, ADEQ drywell registration numbers must be made part of the as- built plans.

Storm Sewer Notes:

1. Cut-off walls with a minimum dimension of 18 inches in height shall be used at all scuppers, terminations of riprap, concrete storm drainage culverts and concrete spillways behind scuppers 6' minimum.

2. Safety railings shall be placed on all scuppers above spillways. Per mag std. Dtl. 145.

3. Trash racks are required at all inlets and outlets of storm drain head walls for all pipes 12" (inches) in diameter and larger.

4. Reinforced concrete pipe (RCP) shall be placed per manufacturer's specifications and in accordance with mag std. Spec. 601, 716, and 735.

5. All riprap within city row shall be grouted. All riprap on private property shall be grouted at the discretion of the city engineer.

6. "U-type" headwalls with wing walls per mag std. Dtl. 501-3 or 501-4 are required for all exposed storm pipe.

7. Manhole concrete collar shall be one (1) foot deep and one (1) foot wide outside of rim casting. Class aa per mag specification 725 and 505. Concrete collar shall be used in unpaved as well as paved areas. Reinforced collard with #4 steel rebar hoop centered horizontally and vertically.

8. Retention basins should be constructed with a two (2) foot bench at top of side slopes.

9. All CMP and RCP pipe joints shall be joined with an "o" ring or gasket type watertight seal.

10. Any storm drains crossing under paved city streets require ABC bedding four (4) inches below the pipe and one (1) foot above the top of the pipe. The bedding is to be per mag std. Spec. 702; modified compaction to 95% typical.

11. All storm pipes within city row shall be RGRCP.

12. Reinforced concrete box culverts shall be constructed per ADOT standards and specifications, typical.

13. Construction of manhole foundations for all storm drain bases shall be per mag std spec 505 and 725.

14. Storm plan as-builts: as-built storm drain plans prepared by the design engineer shall include, but not be limited to, the following: top of curb (toc) elevations at of each end of scupper, gutter elevations at center or flow-line of each scupper; inlet and outlet inverts; headwall top elevations and inverts; valley gutter flow line elevations; storm manhole rim and invert elevations; drywell rim elevations; pipe dimensions and lengths, and any and all deviations from approved drawings.

Paving Notes:

1. All paving notes shall comply with the recommendations set forth in the Soils (Geo-Technical) Report for this project and the referenced required specifications and details. Soils Report and pavement design were prepared: BY:_____, JOB NO. _____, DATED: _____, _____.
2. The contractor shall verify the locations, elevations and horizontal controls of all existing utilities at point of tie-in prior to commencing any new construction. Should any location, elevation or control differ from that shown on these plans, the contractor shall contact the owner's agent.
3. The contractor shall give seventy-two (72) hours notice to the City Engineer prior to any construction activity within the ROW.
4. The City Engineer must approve all plan revisions in writing prior to construction of any changes to approved plans.
5. Upon commencement of work, traffic control devices per the approved Traffic Control Plan (TCP) shall be posted and maintained by the contractor until such time as work is completed.
6. Removal and relocation of all mailboxes, fences, signs, gates, posts pipes, etc., within the ROW and construction limits shall be directed by the City Engineer.
7. 25 MPH speed limit signs shall be located at all entrances into a residential subdivision development, 35 MPH signs for collectors shall be located per the plans.
8. Concrete collars, on all utility and survey monument frame adjustments, are to be installed flush with the proposed or existing pavement.
9. Paint for pavement marking and striping shall be thermal traffic paint applied in a single coat at a rate of 100 to 110 sq. feet per gallon. Traffic beads must be included.
10. Street cuts on asphalt pavement: Cut existing pavement one (1) foot from the utility trench cut, per MAG Detail 200 Type (T) top; tack edges (using A19 mm per MAG Section 710 asphaltic concrete hot mix). Asphalt concrete shall be tested for compaction to 95%. The contractor, at their expense, will have a private lab core take samples and run a Marshall to compaction for acceptance of all street cuts. All replacement pavements shall match existing, unless authorized in writing by the City Engineer.
11. All construction and test methods shall be in conformance with the City of Maricopa and Maricopa Association of Governments (MAG) Uniform Standards Specifications and Details for Public Works Construction, latest edition.
12. Asphaltic concrete shall conform to MAG USSD Section 710 mix specifications.
13. All concrete shall comply with MAG Section 725, Class-A 3000-psi compressive strength at 28 days, unless otherwise specified. Contractor shall supply mix design to the City

Engineer for approval prior to placement. Contractor shall supply a copy of each batch ticket to the City Engineer or his representative.

14. A copy of the City approved plans must be kept on-site at all times, during the course of construction.
15. All newly constructed pavements shall receive an application of sealant (SS1H), approved in advance by the City Engineer and prior to acceptance into a warranty period. Hydrant reflectors shall be installed after the application of the sealant. Fog seal shall be applied to the road surface 6 months to 1 year after asphalt placement. It shall be applied by a distributor truck equipped with fog nozzles at the approximate rate of 0.10 gallon per square yard. The exact rate shall be as directed by the Engineer. The distributor truck shall be as specified in M.A.G. Section 330.
16. All visible cracks wider than 1/8" shall be sealed around manholes, water valves and survey monuments at the direction of the City Inspector.
17. In the event of any dispute between these plans and MAG standard specifications, these approved plans shall prevail.
18. The contractor/owner is responsible for final adjustment of all manholes, valves, clean-outs, water meter boxes, j-boxes, etc., and restoration of construction site to MAG standards, including ROW grading.
19. Testing of A/C mix prior to placement is required and results are to be delivered to the City Engineer or his representative prior to paving.
20. Rolling patterns required by the geo-technical testing firm shall be supplied to the City Engineer's representative.
21. Core testing of newly constructed asphalt concrete surfaces may be required at the discretion of the City Engineer. Core tests are mandatory, along with supporting Marshall test results, for all existing roadways where street cuts are necessary.
22. Protection of valley gutters, and aprons during paving operations shall be the responsibility of the contractor and all damaged concrete shall be replaced prior to acceptance.
23. Tack seal shall be required between lifts (unless second lift is applied on the same day as first lift) and all vertical concrete surfaces prior to placement of asphalt. This requirement also applies to vertical asphaltic concrete surfaces and at all joints of new lifts.
24. The surveyor shall perform installation and straddling of monuments. Once stamped, datum shall be part of the as-built plans.
25. Street sign bases, poles and signs shall be installed prior to the final walkthrough and acceptance into any warranty period.
26. All warning, regulatory and street name signs must be manufactured of "ASTM D-4956-01a-Type IX Sheeting". All other signs must be manufactured with "ASTM D-4956-01a-Type III Sheeting" which will be attached to the standard sign aluminum plates. Sign

imaging shall be in compliance with the reflective sheeting manufacturer's matched component system. Sign imaging shall consist of an acrylic based electronic film able to be cut 3M 1170 Series or equivalent or silk-screened (depending on the quantity of signage) with standard highway colors. In addition, a graffiti-protective coating, of a premium protective overlay film, 3M 1160 or equivalent, shall be used on all regulatory and warning signs. Graffiti protective coating must be designed to comply with the underlying reflective sheeting match component system.

27. ROW grading shall be completed prior to the final walk-through and shall be held one (1") inch below back of walk (b/w) or top of curb (t/c).
28. Paving as-built plans shall be prepared by the design engineer and shall certify that this project was constructed in substantial conformance with the approved plans prior to request for final inspection, Certificate of Occupancy or release of assurance.
29. Freshly paved finished roadway shall be ¼" above the lip of the concrete gutter. Asphalt paving machines shall be equipped with an activated screed in order to make the first pass (ribbon) 17' or greater.
30. Sub-grade preparation for all sidewalks, curb and gutter shall be scarified and loosened to a depth of 6 inches, and shall be constructed to achieve a uniform moisture by the addition of water. Moisture shall be maintained 2.0 percent above optimum moisture prior to placement of concrete, and compacted to 95 percent of maximum density. All materials outside the moisture limit shall be considered subject to removal.
31. Any pavement adjacent to existing ROW must match the existing pavement design, unless authorized, in writing, by the City Engineer.
32. No diesel, or other cleaning solvents, may be applied to the paving hopper, the screed, or the auger immediately prior to beginning of the paving operation.
33. PAVING PLAN AS-BUILTS: As-built plans shall include, but not be limited to, the following: Horizontal and vertical control, changes to any grade break locations, top of curb (T/C) elevations at each curb return, property corners, gutter/flow line elevations, scupper and catch basin inverts, monumentation, cross-slopes, valley gutter flow line elevations, hydrant reflectors and any, and all, changes to the approved plans.

Signing Notes:

1. The City Engineer may require the contractor to adjust signing as necessary.
2. Sign locations and offsets may require the contactor to adjust them by the City Engineer to improve visibility.
3. All Warning, Regulatory and Arterial Street Name Signs must be manufactured of "ASTM D-4956-04 Proposed Type XI Sheeting" (3M DG3 4090 series or equivalent) all other signs must be manufactured with "ASTM D-4956-04 Type IV Sheeting" (3M3930 Series or equivalent) which will be attached to the standard signage aluminum plates. Sign imaging shall be in compliance with the reflective sheeting manufactures matched component system. Sign imaging shall consist of an acrylic based electronic cuttable film (3M 1170 Series or equivalent) or silk screened (depending on the quantity of signage) with standard highway colors. In addition, if called out on plans, to create a graffiti-protective coating, a premium protective overlay film 3M 1160 or equivalent shall be used which is designated to comply with the underlying reflective sheeting match component system.
4. Warranty documents are required and must be submitted prior to job acceptance.
5. "No Parking" signs shall be R8-3a (12" x 18") modified with a lower arrow plaque. They shall be placed approximately five (5) foot from back-of-curb and 45° to the curb.
6. Speed limit signs (R2-1) are to be installed at four (4) per direction of travel per mile.
7. Stop signs (R2-1) are to be 30-inch x 30 inch minimum size.
8. Street name signs in subdivisions shall conform to the City of Maricopa standard colors, font, and style. Private street name signs must include yellow chevrons two (2) inches at each end of the sign to designate a private street.
9. Advance street name signs are to be installed at a height of four (4) feet to the bottom of the sign and placed so they are not obstructed by vegetation. Signs are to be installed in medians whenever possible.
10. All existing signs temporarily removed by the contractor must be salvaged for reinstallation by the contractor.
11. All existing signs permanently removed by the contractor must be salvaged and returned to Public Works.

Striping Notes:

1. The City Engineer may require the contractor to adjust striping as necessary.
2. All permanent longitudinal pavement striping (centerlines, lane lines, bay lines) must use 60 mil. hot-sprayed or extruded thermoplastic. Reflective glass beads must be applied in accordance with Section 704 of ADOT's Standard Specifications for Road and Bridge Construction.
3. All permanent lateral pavement striping (stop bars, crosswalk lines) must use 90 mil. hot-sprayed or extruded thermoplastic. Reflective glass beads must be applied in accordance with Section 704 of ADOT's Standard Specifications for Road and Bridge Construction.
4. All temporary pavement markings must use reflective traffic paint.
5. All median noses must be painted yellow with reflective glass beads from the tip of the median back ten (10) feet.
6. All raised pavement reflectors must be installed with CRAFCO pavement reflector adhesive, or equivalent.
7. All conflicting pavement markings must be obliterated by means of water blasting by the contractor.
8. A sealant approved by the City Engineer must be applied by the contractor to all areas where pavement markings have been obliterated.

Fire Department Requirements and Information:

1. **GENERAL NOTES TO THE CONTRACTOR**

   a. The acceptable plan size shall be limited to 24" x 36".

   b. All buildings (except Group R, Division 3 [see below] Group S-2 greater than 1,500 s.f. and Group U occupancies) shall be equipped with an approved automatic fire sprinkler system installed in accordance with Fire Code, NFPA 13, and City of Maricopa Fire Code amendments.

   c. One (1) set of stamped and approved drawings shall be kept on-site and made available to City Inspectors on demand.

   d. The Contractor shall provide the City Inspector with a copy of the following items upon successful completion of the system and prior to City acceptance of the system.

      i. The "Contractor's Material and Test Certificate for Aboveground Piping," in accordance with NFPA 13.
      ii. The "Contractor's Material and Test Certificate for Underground Piping," in accordance with NFPA 24.
      iii. The "Certificate of Compliance" for fire alarm systems in accordance with NFPA 72; upon success.

1. **AUTOMATIC SPRINKLERS**

   a. Fire protection systems shall be installed or modified by a contractor licensed to perform such work in the State of Arizona.

   b. Automatic Sprinkler systems shall be supervised by an approved, proprietary, or remote signal station service; or an audible signal shall sound at a constantly attended location when the number of sprinklers heads is 20 or more in Group 1, Division 1 occupancies or 100 or more sprinkler heads in all other occupancies.

2. **FIRE DEPARTMENT ACCESS ROADWAYS (TEMPORARY)**

   a. Fire Department Access Roadways shall be constructed and maintained to support the loads of fire apparatus throughout construction.

   b. Fire Department Access Roadways shall be a minimum of 20 feet clear width with minimum six (6) inches of 95% compacted AB. The road surface shall provide all – weather access to the site.

   c. No trenching across Fire Department Access Roadways is permitted. Required water fire flow shall be provided and maintained throughout construction.

   d. Fire Department Access Roadways shall be designed to remain opened at all times and be constructed in a manner that is satisfactory to the Division of Fire Prevention.

   e. The necessary turning radius for Temporary Fire Department Access Roadways is 26 feet inside radius and 48.5 feet outside radius for clear mobility.

3. FIRE DEPARTMENT CONNECTION (FDC)

a. Fire Department Connections (FDC's) for Fire Code, Building Code, and NFPA 13 Fire Sprinkler Systems shall be two, 2- ½ inch, national standard thread, female swivels. FDC's for NFPA 13D and 13R sprinkler systems shall be single 1- ½ inch, national standard thread female swivels with approved non-locking metal caps.

b. FDC's shall be red in color with 2-inch high white letters and numbers. FDC's serving multiple buildings shall be signed with the premise address on a sign. The sign shall be 10 inches by 8 inches, red in color with white 2-inch letters or numbers. See F.D. Details. The signs shall include address (1234-46) of the premise(s) served by the FDC and shall be 0.08 gage aluminum. The sign shall be securely attached to the FDC check valve with "U" type bolts or other means as to secure and not bend the sign.

c. FDC's for Multi-Family (R-1) shall be 1-1/2 inch female swivel connections located on the building under the audio/visual (horn/strobe) device for the building. PIV's shall be signed in accordance with F.D. Details on the PIV as either riser or sectional control. All riser control PIV's shall include the address of the premise(s) served. PIV's shall be red in color with 2-inch high white letters and numbers.

d. All Fire Department hose stations and standpipe hose discharges for Fire Department use shall be 2- ½ inch, national standard thread, and female swivels. No hose shall be attached to Fire Department hose stations.

e. The Fire Department Connection (FDC) must be installed remotely and shall be so located that fire apparatus and hose connected to the supply system will not obstruct access to the building for other fire apparatus.

f. The FDC shall be located on the street side of the building, fully visible and recognizable from the street or nearest point of Fire Department vehicle access.

g. The FDC shall be located within 150 feet of a fire hydrant connected to a public water main.

h. The FDC shall be located not less than six (6) feet or not more than 150 feet from an approved Fire access roadway or driveway.

i. A three (3) foot clearance measured from the center of the FDC shall be maintained around the connection. There shall not be any type of landscaping such as bushes, trees, cactus or river rock within three feet of the connection or between the curb and the FDC.

j. The FDC shall not be located within a retention area or behind walls.

k. FDC inlets shall be located 36 inches above the finished grade.

l. The FDC shall be painted brilliant red.

m. The FDC location shall be approved by the Division of Fire Prevention.

SEWER NOTES TO THE CONTRACTOR:

1. Final acceptance of underground facilities by global water shall be in accordance with design standard, acceptance of underground facilities.

2. Prior to acceptance, a video survey of the entire sewer system mainline and services shall be completed. After the plumbing connection has been completed, and prior to obtaining a water meter, a video survey will be required from the clean out connection point to the sewer main. A copy of the video shall be given to global water.

3. Water meters will not be installed to any water service location until all sewer facilities have been inspected and approved by global water, a video survey has been completed, all agencies approvals have been submitted, including easements and as-builts.

4. It shall be the contractor's sole responsibility to verify the presence and location of any and all existing overhead and/or underground utilities that may interfere with this construction, whether or not said utilities are shown on the construction plans for this project. Contractor shall adequately protect and maintain such utilities to avoid any damage.

5. It shall be the contractor's responsibility to uncover all existing sewer lines being connected to, and to verify the location, existing invert, slope and pipe size prior to construction. If size and slope do not match a manhole, the manhole shall be constructed at the connection point.

6. It shall be the contractor's responsibility to coordinate with the engineer of record or surveyor, and provide sufficient time for said engineer of
Record or surveyor, to locate all facilities for as-built purposes. Final acceptance of the sewer facilities will not be issued until as-built drawings have been reviewed and accepted by global water.

7. Any construction performed without the knowledge of the global water
Inspector, or his representative, is considered at risk and liable for removal and replacement at the contractor's expense.

8. Prior to the start of construction, contractor shall schedule a preconstruction meeting at the job site with global water's inspector. Global water's inspector can be reached at 480-560-5702.

9. Copies of all test results shall be given to global water, including concrete batch tickets from delivery trucks, to verify type a 3000 psi concrete.

10. Subgrade under all manhole bases shall be compacted to 95% density, to include an area of 1 foot beyond the manhole diameter.

11. Review of the plans for compliance with global water's requirements shall not prevent any correction of errors found to be in violation of any applicable standards of the utility or any other governmental agency.

GENERAL SEWER NOTES

1. Construction of sewer facilities shall begin within 1 year from global water's approval date on the plans. If construction has not started within 1 year, plans shall be resubmitted to global water for review and approval and shall include a new approval to construct ("ATC") issued by the Arizona department of environmental quality ("ADEQ"), prior to start of construction.

2. All work and materials shall conform to global water's standards, ADEQ standards, current mag specifications, and any requirements of the local governing authority, as applicable. In the event of a conflict, the more stringent requirement shall govern. Failure to meet any of these requirements shall be cause for rejection.

3. Prior to construction, all permits shall be secured as required from the appropriate governing agencies.

4. Sewer line construction shall be sdr35 PVC in accordance with mag specification section 615, ASTM D-3034 and ASTM F-679 or ceramic epoxy ductile iron pipe. All ductile iron pipe shall be polyethylene wrapped for the entire length in accordance with mag section 610.5 VCP. Concrete pipes are not acceptable and curvilinear sewer lines are not allowed.

5. Sewer lines require a minimum of 6 feet of cover from top of pipe to finished grade.

6. Manholes shall be precast concrete in accordance with global water detail 421. Manholes shall not have steps installed. Global water shall be provided with an H-20 load certification from the manufacturer for adjusting rings, cones, etc. Manholes shall be treated with insect treatment as soon as the manhole is raised to grade and prior to final acceptance. Documentation of treatment is to be provided to global water.

7. Manhole covers shall be cast iron in accordance with mag specifications and shall be 24" or 30" ring and cover, Deeter df 1295 or df 1296. Global water shall be provided with h-20 load certification from the
Manufacturer for cast iron ring and covers per CID A-A 60005.

8. All manholes shall be treated with sewer shield 100, raven 405 or an approved equal coating and shall be applied immediately after manhole is raised to grade. Coating shall be installed and tested in their entirety in accordance with manufacturer's recommendations.

9. Water tightness of sewer manholes shall be determined by vacuum test per ASTM C-1244.

10. All sewer lines must be tested using low-pressure air testing in
Accordance with AAC R18-9-E301(d)(2)(j)(i).

11. The total length of sewer line must be tested for uniform slope in accordance with AAC R18-9-E301(d)(2)(k).

12. Deflection testing shall be done on all sewer lines to ensure the installation meets or exceeds the manufacturer's recommendations in accordance with AAC R18-9-E301(d)(2)(i).

13. All work will be subjected to a two (2) year warranty period and does not begin until the bill of sale has been completed. See global water design standard, final acceptance/bill of sale.

WATER NOTES TO THE CONTRACTOR:

1. Final acceptance of underground facilities by global water shall be in accordance with global water design standard, acceptance of
Underground utilities.

2. Water meters will not be installed to any water service location until all facilities have been inspected and approved by global water. All water meters shall be obtained through global water.

3. It shall be the contractor's sole responsibility to verify the presence and location of any and all existing overhead and/or underground utilities that may interfere with this construction, whether or not said utilities are shown on the construction plans for this project. Contractor shall adequately protect and maintain such utilities to avoid any damage.

4. It shall be the contractor's responsibility to coordinate with the engineer of record or surveyor and provide sufficient time for said engineer of record or surveyor to locate all facilities for as-built purposes. All horizontal bends, tees, and vertical realignments must be left exposed until sufficient as-built information has been obtained. Quantities shall be corrected to reflect the actual number of facilities installed. Final acceptance of the water facilities will not be issued until as-built drawings have been reviewed and accepted by global water.

5. Any construction performed without the knowledge of the global water inspector, or his representative, is considered at risk and liable for removal and replacement at the contractor's expense.

6. Prior to the start of construction, contractor shall schedule a preconstruction meeting at the job site with global water's inspector. Global water's inspector can be reached at 480-560-5702.

7. Copies of all test results shall be given to global water.

8. Review of plans for compliance with global water's requirements shall not prevent any correction of errors found to be in violation of any applicable standards of the utility or any other governmental agency.

9. Allowable pipe deflection for ductile iron pipe.

Type	Size	Max. Joint deflection	Max. Offset per joint	Min. Radius
Dip	8” -12”	2.5 degrees	8.3 inches	412.3
Dip	14” -16”	2.0 degree	7.2 inches	515.5
Dip	18” -24”	1.5 degrees	5.3 inches	687.3

The maximum deflection angle shall not exceed ½ of the manufacturer’s recommendations. The maximum offset per joint, in the above-referenced table, is based on an 18-foot lying length of pipe to get the maximum
Offset. If a different laying length is used, the engineer is to calculate the required offset.

10. For commercial sites and areas outside of rights-of-way, all vertical and horizontal bends shall be marked with 3m ball markers or equal. Markers shall be located at an elevation of 1 foot over top of pipe for trenches 5 feet or less. For trenches greater than 5 feet, ball marker locations shall not exceed 4 feet below finished grade line.

11. Connection to existing water stubs will not be allowed until all facilities have been tested. A temporary connection will be required in order to provide water for testing, flushing and general construction. The contractor will be required to secure a meter and backflow device from global water. The number of connection points shall be determined by global water. Any other connections will not be allowed until all on-site facilities have been tested. Upon acceptance of the water facilities, the meter and backflow devices shall be removed, and all temporary connections completed.

GENERAL WATER NOTES

1. All work and materials shall conform to global water's standards, as well as Arizona department of environmental quality ("ADEQ") standards, current mag specifications, and any requirement of the local governing authority, as applicable. In the event of a conflict, the more stringent requirement shall govern.

2. Prior to construction, all permits shall be secured as required from the appropriate governing agencies. Copies of all permits shall be provided to global water's inspector prior to the pre-construction meeting.

3. Mortar-lined ductile iron pipe shall be used in accordance with mag section 750. Potable waterlines shall be blue polyethylene wrapped, raw water transmission waterlines shall be black polyethylene wrapped for the entire length in accordance with mag section 610.5.

4. All waterlines less than 12 inches must have a minimum cover of 36 inches over the top of the pipe to finish grade, pipes 12 inches and larger shall have a minimum cover of 48 inches. All water services shall have a minimum cover of 30 inches

5. All valve boxes shall be adjusted to finished grade immediately after placing of asphalt concrete surface. All valves in pavement or concrete shall have locking lid covers. Any valves located outside of the paving section will be required to have debris caps, infact corp. Mud plugs or an approved equal.

6. All water lines must be disinfected per ADEQ engineering bulletin #8 or AWWA C651-86. Written tests results are to be given to Global Water's inspector.

7. All bends and fittings shall be mechanical joint in accordance with AWWA C111 and mag section 750.4. Joint restraints shall be field Lok 350 gasket joint restraint or EBBA series 2000 PV mechanical joint restraint in accordance with mag 303-1 & 2. Concrete thrust blocks, as a substitute for restrained joints, are not acceptable.

8. All pipes, fittings, valves, coatings, etc. Shall conform to NSF standards 61.

9. Contractor shall install blue locating tape one foot above top of water mains prior to backfill.

10. All valves 8 to 16 inches shall be Clow, Mueller, U.S. pipe or Kennedy resilient seated gate valve in accordance with AWWA c509 and mag 630-3.

Valves larger than 16 inches shall be butterfly type in accordance with AWWA standards C504 located within an operating manhole with a bypass.

11. All fire hydrants shall be Clow medallion or Mueller in specific locations with a minimum 3 foot bury depth, 5-1/4 inch main valve opening, one 4 ½ inch NST pumper connection which faces the curb or sidewalk, and two 2- ½ inch NST hose connections. No substitutions will be allowed. Elevation and location of the hydrant flange shall conform to global water standard detail 360-1 and 360-2.

12. All service saddles shall be Mueller BR2B double strapped for ductile iron pipe or approved equal.

13. Backflow preventers for commercial/irrigation sizes ¾" to 2 ½" shall be reduced pressure assemblies and shall have a certificate of approval issued by USC-FCCCHR in accordance with AAC r18-4-115. All assemblies shall be installed in accordance with global water standard detail 351-1. A certified test must be submitted to global water's compliance department within 24 hours of the meter installation. Acceptance of the water facilities will not be granted prior to backflow prevention approval. All commercial/irrigation backflow preventer sizes ¾" to 2 ½" shall have a tan quality enclosure or equal, and sized accordingly.

14. Backflow preventer for fire lines 3" – 10" shall be double check assemblies and shall have a certificate of approval issued by USC-FCCCHR in accordance with AAC R18-4-115. All assemblies shall be installed in accordance with global water standard detail 350-2. A certified test must be submitted to global water's compliance department within 24 hours of the meter installation. Acceptance of the water facilities will not be granted prior to backflow prevention approval.

15. Air release valves shall be ARI model d-040 or ABCO 140 c for waterlines up to 12 inches in diameter, for lines larger than 12 inches ARI d060 or ABCO 147/148 shall be installed per global water detail 388-1. All air release valves shall have a tan quality enclosure or equal, and sized accordingly.

16. Global water's inspector shall be notified a minimum of 48 hours prior to the start of work and each test event. Weekends and holidays are not considered as part of the notification period.

17. To ensure backfill and concrete placement is completed per global water detail 200 and mag 601 plan specifications, copies of all concrete and compaction test reports shall be submitted to global water upon completion of each testing event.

18. All work will be subjected to a two (2) year warranty period that does not begin until the bill of sale has been completed. See global water design standard, final acceptance/bill of sale.

19. In accordance with AAC r18-9 e301, separation between water (potable, reclaimed or storm drain) and sewer main shall comply with the requirements of 18 AAC 5, article 5 and mag 404-1, 2 and 3. Where a waterline crosses a reclaimed waterline, storm drain, or other non-potable line, they shall be considered sewer.

GENERAL WATER NOTES FROM GLOBAL WATER RESOURCES JANUARY 2017

1. All work and materials shall conform to global water's standards, as well as Arizona department of environmental quality ("ADEQ") standards, current mag specifications, and any requirement of the local governing authority, as applicable. In the event of a conflict, the more stringent requirement shall govern.

2. Prior to construction, all permits shall be secured as required from the appropriate governing agencies. Copies of all permits shall be provided to global water's inspector prior to the pre-construction meeting.

3. Mortar-lined ductile iron pipe shall be used in accordance with mag section 750. Potable waterlines shall be blue polyethylene wrapped, raw water transmission waterlines shall be black polyethylene wrapped for the entire length in accordance with mag section 610.5.

4. All waterlines less than 12 inches must have a minimum cover of 36 inches over the top of the pipe to finish grade, pipes 12 inches and larger shall have a minimum cover of 48 inches. All water services shall have a minimum cover of 30 inches

5. All valve boxes shall be adjusted to finished grade immediately after placing of asphalt concrete surface. All valves in pavement or concrete shall have locking lid covers. Any valves located outside of the paving section will be required to have debris caps, infact corp. Mud plugs or an approved equal.

6. All water lines must be disinfected per ADEQ engineering bulletin #8 or AWWA C651-86. Written tests results are to be given to Global Water's inspector.

7. All bends and fittings shall be mechanical joint in accordance with AWWA C111 and mag section 750.4. Joint restraints shall be field Lok 350 gasket joint restraint or EBBA series 2000 PV mechanical joint restraint in accordance with mag 303-1 & 2. Concrete thrust blocks, as a substitute for restrained joints, are not acceptable.

8. All pipes, fittings, valves, coatings, etc. Shall conform to NSF standards 61.

9. Contractor shall install blue locating tape one foot above top of water mains prior to backfill.

10. All valves 8 to 16 inches shall be Clow, Mueller, U.S. pipe or Kennedy resilient seated gate valve in accordance with AWWA c509 and mag 630-3.

Valves larger than 16 inches shall be butterfly type in accordance with AWWA standards C504 located within an operating manhole with a bypass.

11. All fire hydrants shall be Clow medallion or Mueller in specific locations with a minimum 3 foot bury depth, 5-1/4 inch main valve opening, one 4 ½ inch NST pumper connection which faces the curb or sidewalk, and two 2- ½ inch NST hose connections. No substitutions will be allowed. Elevation and location of the hydrant flange shall conform to global water standard detail 360-1 and 360-2.

12. All service saddles shall be Mueller BR2B double strapped for ductile iron pipe or approved equal.

13. Backflow preventers for commercial/irrigation sizes ¾" to 2 ½" shall be reduced pressure assemblies and shall have a certificate of approval issued by USC-FCCCHR in accordance with AAC r18-4-115. All assemblies shall be installed in accordance with global water standard detail 351-1. A certified test must be submitted to global water's compliance department within 24 hours of the meter installation. Acceptance of the water facilities will not be granted prior to backflow prevention approval. All commercial/irrigation backflow preventer sizes ¾" to 2 ½" shall have a tan quality enclosure or equal and sized accordingly.

14. Backflow preventer for fire lines 3" – 10" shall be double check assemblies and shall have a certificate of approval issued by USC-FCCCHR in accordance with AAC R18-4-115. All assemblies shall be installed in accordance with global water standard detail 350-2. A certified test must be submitted to global water's compliance department within 24 hours of the meter installation. Acceptance of the water facilities will not be granted prior to backflow prevention approval.

15. Air release valves shall be ARI model d-040 or ABCO 140 c for waterlines up to 12 inches in diameter, for lines larger than 12 inches ARI d060 or ABCO 147/148 shall be installed per global water detail 388-1. All air release valves shall have a tan quality enclosure or equal and sized accordingly.

16. Global water's inspector shall be notified a minimum of 48 hours prior to the start of work and each test event. Weekends and holidays are not considered as part of the notification period.

17. To ensure backfill and concrete placement is completed per global water detail 200 and mag 601 plan specifications, copies of all concrete and compaction test reports shall be submitted to global water upon completion of each testing event.

18. All work will be subjected to a two (2) year warranty period that does not begin until the bill of sale has been completed. See global water design standard, final acceptance/bill of sale.

19. In accordance with AAC r18-9 e301, separation between water (potable, reclaimed or storm drain) and sewer main shall comply with the requirements of 18 AAC 5, article 5 and mag 404-1, 2 and 3. Where a waterline crosses a reclaimed waterline, storm drain, or other non-potable line, they shall be considered sewer.

STREET LIGHTING GENERAL NOTES:

The following information is provided to emphasize critical work and is intended to supplement the specifications.

1. The contractor shall comply with state and city statutes and ordinances.
2. Prior to submittal, the street light designer shall examine all general construction drawings and visit the construction site to become familiar with existing conditions under which he will operate, and which will in any way affect the work under the contract.
3. The street light designer should verify dimensions at the site and immediately report differences to the developer's construction manager and not procced with work until the construction manager renders a decision.
4. The electrical contractor shall comply with all licensing requirements set forth by the state registrar of the contractor's office to perform work relating to street light installation in City of Phoenix right-of-way.
5. One dry utility permit for each City of Phoenix street light project shall be obtained by the contractor prior to construction.
6. Light poles shall be installed plumb, be adjusted to provide proper alignment to the roadway being lighted and be properly grounded when the installation is completed.
7. Streetlights are inspected by the City of Phoenix streetlighting inspector. When accepted and energized the contractor will install pole numbers prior to inspection.
8. Luminaires shall be installed level and include a lamp and photocell. The luminaires shall be free of dust, dirt, or anything that would impair the output of the light.
9. Luminaires furnished with multi-tap drivers shall be rewired or reconnected to math the voltage supplied by the electric utility company.
10. Pole shall be set plumb in two directions, ninety (90) degrees apart.
11. Surplus excavation shall be disposed of by the contractor.
12. Wiring shall be installed per serving utility company standards. Conduit shall be installed at the depth specified on their plans.
13. Conduit must be listed and labeled and suitable for underground use.
14. Connections shall be per serving utility company standards. Each pole shall have a 8'x5/8" copper clad ground rod driven beneath pull box. A #6 bare copper lead from the ground rod in pull box to landing lug in street light pole hand hole is required.
15. Excavations for pull boxes and material specifications shall be per serving utility company standards.
16. Trench shall be installed per serving utility company standards. The use of a common electric utility company trench is permitted.
17. It is the contractor's responsibility to contact the utility company for coordination of the trenching and the installation of conduit.
18. It is the contractor's responsibility to restore all property, landscaping, paving, and driveways that are disturbed during street light construction to their original condition in conformance with MAG specification section 107.9.

19. If a fixture should fail, it shall be immediately replaced. The developer shall be responsible for furnishing all personnel and equipment necessary to successfully repair the fixture.
20. The contractor shall guarantee all work for a period of one year from the date of final acceptance by the engineering manager, against imperfect workmanship, failure, malfunction of materials and/or equipment due to faulty or imperfect workmanship.
21. This guarantee is to be in writing to the city at the time of issuing final acceptance. Materials and workmanship found to be defective within the warranty period shall be replaced without cost to the city.

TYPICAL LANDSCAPE NOTES

PLANTING WARRANTY & MAINTENANCE NOTES **Advised:**

1. MAINTAIN ALL AREAS INCLUDED IN THE CONTRACT ON A WEEKLY BASIS DURING THE PROGRESS OF WORK, A 90 DAY MAINTENANCE PERIOD, AND UNTIL THE FINAL ACCEPTANCE OF WORK IS RECEIVED IN WRITING.

2. UPON ACCEPTANCE AFTER THE 90 DAY MAINTENANCE PERIOD, THE CONTRACTOR SHALL FURNISH A WRITTEN WARRANTY ON ALL PLANT MATERIAL AGREEING TO GUARANTEE THE CONTINUED GROWTH OF ACTIVE PLANT MATERIAL FOR THE SPECIFIED GUARANTEED PERIODS. ALL GUARANTEE PERIODS COMMENCE FROM THE TIME OF FINAL ACCEPTANCE AT THE END OF THE MAINTENANCE PERIOD.

3. THE CONTRACTOR SHALL WATER AND MAINTAIN ALL LANDSCAPE MATERIAL DURING THE MAINTENANCE PERIOD. THE OWNER WILL WATER AND MAINTAIN THE LANDSCAPE MATERIAL DURING THE WARRANTY PERIOD. THE CONTRACTOR SHALL INSPECT THE LANDSCAPE MATERIALS PERIODICALLY DURING THE WARRANT PERIOD AND SHALL NOTIFY THE OWNER IN WRITING, IF, IN THE CONTRACTOR'S OPINION, THE LANDSCAPE MATERIALS ARE NOT RECEIVING PROPER CARE.

4. ALL TREES, PLANS, CACTI, ACCENTS, AND TURF SHALL BE GUARANTEED FOR A MINIMUM PERIOD OF ONE (1) YEAR AND ALL SHRUBS, GROUNDCOVERS, AND OTHER NON SPECIFIED PLANT MATERIAL SHALL BE GUARANTEED FOR A PERIOD OF 90 DAYS FROM THE DATE OF FINAL ACCEPTANCE. THE GUARANTEE SHALL BE AGAINST DEFECTS INCLUDING DEATH AND UNSATISFACTORY GROWTH, EXCEPT FOR DEFECTS RESULTING FROM NEGLECT BY OWNER, ABUSE BY OTHERS, OR UNUSUAL PHENOMENA OR INCIDENTS WHICH ARE BEYOND THE LANDSCAPE CONTRACTOR'S CONTROL.

5. ANY PLANT MATERIALS WHICH ARE NOT APPROVED PRIOR TO OCTOBER 1 OF THE CALENDAR YEAR IN WHICH THEY ARE INSTALLED SHALL BE FURTHER GUARANTEED UNTIL MAY 15 OF THE FOLLOWING CALENDAR YEAR.

6. ALL PLANT MATERIALS MUST BE MAINTAINED IN HEALTH AND VIGOR AND BE ALLOWED TO ATTAIN NATURAL SIZE AND SHAPE IN ACCORDANCE WITH THE ORIGINALLY APPROVED LANDSCAPE PLAN.

7. REFER TO BOOK SPECIFICATIONS, IF INCLUDED IN THIS DOCUMENT SET, FOR ADDITION INFORMATION ON THE SPECIFICS OF THE ANTICIPATED WARRANTY.

8. LANDSCAPE CONTRACTOR SHALL PREPARE AND SUBMIT TO THE OWNER TYPEWRITTEN MAINTENANCE GUIDELINES AT FINAL WALK-THRU AND PRIOR TO FINAL ACCEPTANCE OF WORK.

TYPICAL LANDSCAPE NOTES

9. IF TURF IS USED ON THIS PROJECT THE LANDSCAPE CONTRACTOR SHALL REAPPLY SEED OR SOD IN ALL AREAS WHICH HAVE DEVELOPED BARE SPOTS HALFWAY THROUGH TH MAINTENANCE PERIOD. AREAS WHICH CANNOT BE RESEEDED FOR SUMMER GROWTH DUE TO CONTRACTOR'S INABILITY TO RESEED DURING PROPER GROWING SEASON SHALL BE OVERSEEDED OR SODDED WITH GRASS APPROPRIATE FOR THE CURRENT SEASON, CARED FOR THROUGHOUT THE OFF SEASON, AND PROPERLY SEEDED AT THE NEXT APPROPRIATE GROWING SEASON. THESE ARRANGEMENTS MUST BE MADE WITH THE OWNER PRIOR TO CONDITIONAL ACCEPTANCE OF THE WORK AND MAY REQUIRE A MONETARY HOLD-BACK.

10. COST FOR REPLACEMENTS DURING THE WARRANTY PERIOD IS ASSUMED PART OF THE BID QUOTATIONS AND THEREFORE WILL NOT RESULT IN ANY ADDITIONAL COST TO THE OWNER OF LANDSCAPE ARCHITECT.

EXISTING LANDSCAPE NOTES **Advised:**

1. BEFORE WORK BEGINS ON THE PROJECT, THE LANDSCAPE CONTRACTOR SHALL SCHEDULE A PRE-CONSTRUCTION CONFERENCE WITH THE OWNER/AND/OR THE GENERAL CONTRACTOR TO REVIEW THE PROJECT. THE OWNER AND/OR OWNER'S AUTHORIZED REPRESENTATIVE IS TO APPROVE ANY CHANGES PRIOR TO THE START OF ANY WORK.

2. ALL DEMOLITION AREAS SHALL BE FLAGGED FOR APPROVAL PRIOR TO DEMOTION.

3. ALL EXISTING PLANT MATERIAL SHALL REMAIN UNLESS OTHERWISE NOTED. SHOULD ANY CONFLICTS ARISE BETWEEN THE EXISTING PLANT MATERIAL ON-SITE AND PROPOSED IMPROVEMENTS SHOWN ON THE PLANS THE CONTRACTOR SHALL NOTIFY THE LANDSCAPE ARCHITECT IMMEDIATELY.

MAINTENANCE NOTES **Required:**

1. REPLACEMENT OF DEAD TREES ALONG ARTERIAL AND COLLECTOR STREETS SHALL BE BY THE INDIVIDUAL PROPERTY OWNERS OR THE HOMEOWNER'S ASSOCIATION AND SHALL BE COMPLETED WITHIN THREE (3) MONTHS FROM THE DATE THAT THE ASSOCIATION OR PROPERTY OWNER IS NOTIFIED BY THE CITY.

2. INDIVIDUAL PROPERTY OWNERS, AND/OR PROPERTY OWNER'S ASSOCIATION SHALL PROPERLY MAINTAIN ALL LANDSCAPE MATERIALS AND LANDSCAPED AREAS, INCLUDING THAT WITHIN THE PUBLIC RIGHTS-OF-WAY ADJACENT TO THE DEVELOPMENT, IN ACCORDANCE WITH THE APPROVED LANDSCAPE PLAN.

APPENDIX B
STANDARD PLANS AND ROADWAY DETAILS

(TITLE)

LEGAL DESCRIPTION

A PORTION OF SECTION x, TOWNSHIP x SOUTH, RANGE x EAST, GILA
AND SALT RIVER MERIDIAN,
PINAL COUNTY, ARIZONA

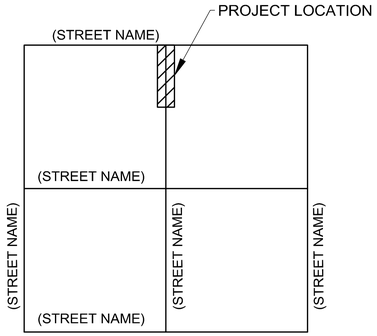

VICINITY MAP
NOT TO SCALE

CITY OF
MARICOPA
PROUD HISTORY • PROSPEROUS FUTURE

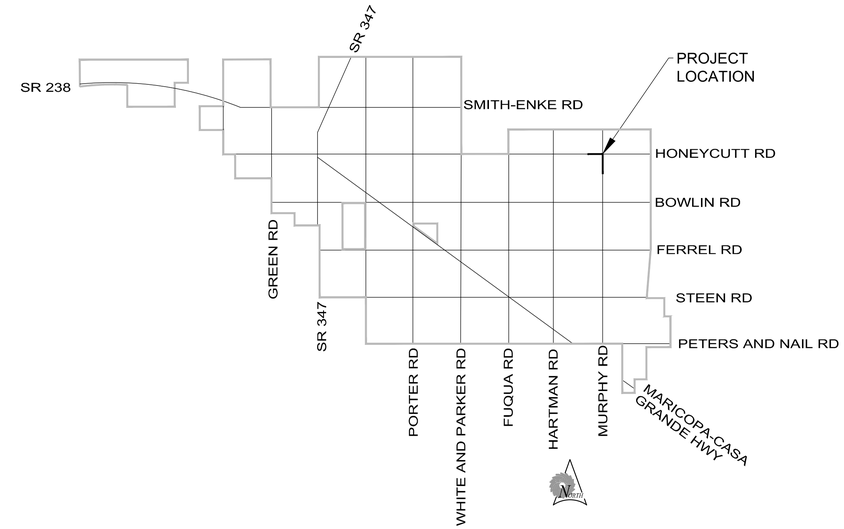

KEY MAP
NOT TO SCALE

OWNER

(OWNER NAME)
(ADDRESS)
(CITY), (STATE) (ZIP CODE)
TELEPHONE: (XXX) XXX–XXXX
FAX: (XXX) XXX–XXXX
CONTACT: (NAME)

ENGINEER

(ENGINEERING FIRM NAME)
(ADDRESS)
(CITY), (STATE) (ZIP CODE)
TELEPHONE: (XXX) XXX–XXXX
FAX: (XXX) XXX–XXXX
CONTACT: (NAME)

SHEET INDEX

DESCRIPTION	TITLE	SHEET #
COVER SHEET	COV	1
GENERAL NOTES	GN1	2
GENERAL NOTES	GN2	3
LEGEND & ABBREVIATIONS	GN3	4
INDEX SHEET	IND	5
SITE PLAN	SPXX–SPXX	X–XX
PLAN AND PROFILES	PPXX–PPXX	XX–XX
DETAILS	DTXX–DTXX	XX–XX

BASIS OF BEARING

(XXXXXXX)

BENCHMARK

(XXXXXXXX)

QUANTITIES

ITEM	QUANTITY
(XXXXXXX)	(XXXX) LF
(XXXXXXX)	(XXXX) EA
(XXXXXXX)	(XXXX) SY
(XXXXXXX)	(XXXX) CY
(XXXXXXX)	(XXXX) LS

APPROVALS

THE AUTHORIZED REPRESENTATIVES OF THE FOLLOWING AGENCIES HEREBY ACKNOWLEDGE OR HAVE ACKNOWLEDGED THAT THEY HAVE REVIEWED AND APPROVED THE DESIGN SHOWN BY THESE DRAWINGS. CONSTRUCTION MAY BEGIN AFTER ALL APPROPRIATE PERMITS HAVE BEEN OBTAINED.

CITY OF MARICOPA ENGINEER — DATE

(ADDITIONAL REPRESENTATIVES OF AGENCIES) — DATE

FEMA

1. THIS PROPERTY IS LOCATED IN ZONE "(X)", ACCORDING TO FLOOD INSURANCE RATE MAP (FIRM) FOR GILA COUNTY, ARIZONA AND INCORPORATED AREAS (COMMUNITY–PANEL NUMBER (XXX) OF (XXXX) WITH THE EFFECTIVE DATE OF DECEMBER (X), 20(XX)). ZONE "(X)" CONSISTS (XXXXXX).

UTILITY LIST

UTILITY COMPANY	REPRESENTITIVE	PHONE	DATE PLANS SUBMITTED
(XXXX)	(XXXXX)	(XXX)–XXX–XXXX	(XXXXX)
(XXXX)	(XXXXX)	(XXX)–XXX–XXXX	(XXXXX)
(XXXX)	(XXXXX)	(XXX)–XXX–XXXX	(XXXXX)
(XXXX)	(XXXXX)	(XXX)–XXX–XXXX	(XXXXX)

RECORD DRAWING CERTIFICATION

I HEREBY CERTIFY THAT ALL "RECORD DRAWING" INFORMATION AS SHOWN HEREON WAS MADE UNDER MY SUPERVISION OR AS NOTED AND IS CORRECT TO THE BEST OF MY KNOWLEDGE AND BELIEF.

REGISTERED PROFESSIONAL ENGINEER

DATE

811 Know what's below. Call before you dig. 1-800-782-5348

REV NO.	COMMENT	DATE

CITY OF MARICOPA

(PROJECT NAME)
(DRAWING PACKAGE 1ST TITLE)
(DRAWING DESCRIPTION)

PROJ. NO.	DESIGNED	DRAWN	CHECKED	SHEET NO.
(XXXXX)	(XXX)	(XXX)	(XXX)	(XX) of (XX)

P:\Maricopa\06143 Design Standards Manual\Dwg\Cover Sheet\WAR-COV.dwg Oct 09, 2018 12:06pm smazumdar

GENERAL NOTES: CONSTRUCTION INSPECTION AND TESTING

1. ALL PUBLIC IMPROVEMENT CONSTRUCTION WITHIN THE PUBLIC ROW AND ONSITE SHALL BE CONDUCTED IN ACCORDANCE WITH, AND CONFORMANCE TO, THE LATEST EDITION OF THE UNIFORM STANDARD SPECIFICATIONS FOR PUBLIC WORKS CONSTRUCTION AND UNIFORM STANDARD DETAILS FOR PUBLIC WORKS CONSTRUCTION, BOTH AS PUBLISHED BY THE MARICOPA ASSOCIATION OF GOVERNMENTS (MAG).

2. INSPECTION OF WORK PER MAG 105.10: THE ENGINEER SHALL BE PERMITTED TO INSPECT ALL MATERIALS, AND EACH PART OR DETAIL OF THE WORK AT ANY TIME FOR THE PURPOSE OF EXPEDITING AND FACILITATING THE PROGRESS OF WORK. THE ENGINEER SHALL BE FURNISHED WITH SUCH INFORMATION AND ASSISTANCE BY THE CONTRACTOR, AS IS REQUIRED TO MAKE A COMPLETE AND DETAILED INSPECTION. THE CITY ENGINEER REQUIRES THAT THE ACTUAL TEST RESULT DATA SHEET ACCOMPANY ALL COMPACTION TEST RESULTS SUBMITTED TO THE CITY'S INSPECTOR. PASS/FAIL STATEMENTS ARE NOT ACCEPTABLE WITHOUT THE ATTACHED DATA SHEET. FAILURE TO SUBMIT THE TEST RESULT DATA SHEETS WILL RESULT IN AN INCOMPLETE SUBMITTAL AND THE TEST WILL BE REJECTED.

3. IN THE EVENT OF CONFLICT BETWEEN MAG STANDARD SPECIFICATIONS AND DETAILS AND THESE PLANS, THESE PLANS SHALL PREVAIL.

4. THE OFFICE OF THE CITY ENGINEER SHALL BE NOTIFIED AT LEAST FORTY-EIGHT (48) HOURS PRIOR TO THE COMMENCEMENT OF ANY WORK WITHIN THE CITY OF MARICOPA ROW. 520-316-6926.

5. CONTRACTOR IS TO NOTIFY ALL PUBLIC UTILITIES AT LEAST TWO (2) WORKING DAYS PRIOR TO CONSTRUCTION, FOR FIELD LOCATIONS OF THEIR RESPECTIVE FACILITIES, BY CONTACTING THE FOLLOWING: BLUE STAKE: 1-800-782-5348.

6. CONTRACTOR SHALL COORDINATE AND MAKE ARRANGEMENTS FOR RELOCATION OF ANY UTILITIES CONFLICTING WITH THE PROPOSED CONSTRUCTION OF THESE PLANS, WITH THE APPROPRIATE UTILITY.

7. REMOVAL AND REPLACEMENT OF ALL TREES, SHRUBS, VEGETATION, MISCELLANEOUS STRUCTURES, DEBRIS, RUBBLE AND OTHER DELETERIOUS MATERIALS WITHIN THE LIMITS OF CONSTRUCTION SHALL BE AT THE CONTRACTOR'S EXPENSE.

8. ALL CONCRETE SIDEWALKS, DRIVEWAYS, APRONS, VALLEY GUTTER, CURBS AND GUTTERS, LANDSCAPING AND IRRIGATION THAT MAY BE DAMAGED DURING THE COURSE OF CONSTRUCTION SHALL BE REMOVED AND REPLACED BY THE CONTRACTOR AT THE CONTRACTOR'S EXPENSE.

9. SHORING IS TO BE INSTALLED OR A TRENCH BOX IS TO BE USED, IN ALL TRENCHES IN EXCESS OF FIVE (5') FEET IN DEPTH. A REGISTERED CIVIL ENGINEER OR SOILS ENGINEER SHALL CERTIFY SHORING INSTALLATION PLANS, DETAILS AND SPECIFICATIONS. SHORING MUST CONFORM TO OSHA 29 CFR, PART 1926, AND SUBPART D.

10. COMPACTION TESTING IS REQUIRED AND MUST BE PERFORMED IN THE PRESENCE OF A REPRESENTATIVE OF THE CITY ENGINEER.

i. THE CITY ENGINEER REQUIRES THAT THE ACTUAL TEST RESULT DATA SHEET ACCOMPANY ALL COMPACTION TEST RESULTS SUBMITTED TO THE CITY'S INSPECTOR. PASS/FAIL STATEMENTS ARE NOT ACCEPTABLE WITHOUT THE ATTACHED DATA SHEET. FAILURE TO SUBMIT THE TEST RESULT DATA SHEETS WILL RESULT IN AN INCOMPLETE SUBMITTAL AND THE TEST WILL BE REJECTED.

ii. BACKFILL: BACKFILL WITHIN THE PUE AND PUBLIC STREET ROW, COMPACTED TO 95% OF MAXIMUM THEORETICAL DENSITY PER ASTM D698. ALL MATERIALS OUTSIDE THE MOISTURE LIMIT SHALL BE CONSIDERED UNSUITABLE, AND SUBJECT TO REMOVAL. NO HYDRAULIC COMPACTION OR WATER JET COMPACTION WILL BE ALLOWED. ALL COMPACTION MUST BE DONE BY MECHANICAL MEANS. MOISTURE LIMIT SPECIFICATIONS: 2.0 PERCENT BELOW OPTIMUM MOISTURE, MATERIAL SHALL BE UNIFORM.

iii. SUB-GRADE: SUB-GRADE PREPARATION FOR ALL NEW STREETS AND ROADWAYS SHALL CONSIST OF SCARIFYING AND LOOSENING SUB-GRADE TO A DEPTH OF SIX (6") INCHES. SUB-GRADE SHALL BE CONSTRUCTED TO ACHIEVE UNIFORM MOISTURE CONTENT BY THE ADDITION OF WATER AND COMPACTED TO 95% OF MAXIMUM DENSITY. MOISTURE SHALL BE MAINTAINED BETWEEN OPTIMUM AND 4.0% BELOW OPTIMUM MOISTURE AND SHALL BE COMPACTED TO 95% ON MAXIMUM THEORETICAL DENSITY, AS DETERMINED BY ASTM D698. ALL MATERIALS OUTSIDE THE MOISTURE LIMIT AT THE TIME OF PLACEMENT AND COMPACTION SHALL BE CONSIDERED UNSUITABLE AND SUBJECT TO REMOVAL. THE FINISHED SURFACE OF THE SUB-GRADE SHALL NOT VARY FROM THE GRADES ESTABLISHED BY THE CITY ENGINEER BY MORE THAN: 0.04 OF A FOOT ABOVE OR BELOW SPECIFIED GRADE.

11. GRADING OF AGGREGATE BASES AND AGGREGATE SUB-BASE SHALL BE AS FOLLOWS: AGGREGATE MATERIALS SHALL HAVE WATER ADDED TO THEM AND SHALL BE MIXED AND PROCESSED TO PRODUCE A UNIFORM BLEND OF MATERIAL BEFORE PLACEMENT. AFTER PROCESSING, THE MATERIAL SHALL BE PLACED AND SPREAD ON THE PREPARED SUB-GRADE AND SHALL BE PLACED IN A UNIFORM LAYER OR LAYERS NOT EXCEEDING SIX (6") INCHES IN COMPACTED DEPTH, UNLESS OTHERWISE APPROVED IN WRITING BY THE CITY ENGINEER. EACH LAYER OF AGGREGATE BASE SHALL BE COMPACTED TO A DENSITY OF NOT LESS THAN 100% OF THE MAXIMUM DENSITY. THE FINISHED SURFACE OF THE SUB-GRADE SHALL NOT VARY FROM THE GRADES ESTABLISHED BY THE CITY ENGINEER BY MORE THAN 0.04 OF A FOOT ABOVE OR BELOW SPECIFIED GRADE.

12. COMPACTION TESTING FOR SUB-GRADE WILL BE DONE AFTER THE SUB-GRADE HAS BEEN STRING-LINED AND IS WITHIN TOLERANCE AND ACCEPTED BY THE CITY ENGINEER. THE CITY ENGINEER OR THEIR REPRESENTATIVE WILL DIRECT THE NUMBER AND LOCATION OF DENSITY TESTS. ALL SUB-GRADES SHALL HAVE A BLUE-TOP ELEVATION SET TO FINISHED GRADE AT LEFT AND RIGHT EDGES OF PAVEMENT AND CENTERLINE OF ROADWAY.

13. ONE (1) SAND CONE TEST SHALL BE REQUIRED FOR EVERY TEN (10) NUCLEAR DENSITY TESTS PERFORMED, OR WHEN REQUESTED BY THE CITY ENGINEER OR THEIR REPRESENTATIVE. THE CITY ENGINEER OR THEIR REPRESENTATIVE SHALL DETERMINE THE LOCATIONS OF THESE SAND CONE TESTS.

14. ALL MATERIALS, INCLUDING BUT NOT LIMITED TO AGGREGATE BASE COURSE, BORROW MATERIAL AND NATIVE MATERIAL, WILL BE ACCEPTED IN-PLACE ONLY. TESTING REQUIRED FOR ACCEPTANCE WILL INCLUDE A SIEVE ANALYSIS AND PLASTICITY INDEX, (P.I.). DETERMINATION OF MAXIMUM THEORETICAL DENSITY WILL BE IN ACCORDANCE WITH ASTM D698. ONLY A FOUR-POINT PROCTOR TEST WILL BE ACCEPTED.

15. THE BASE COURSE SHALL NOT BE PLACED ON SUB-GRADE UNTIL THE CITY ENGINEER HAS ACCEPTED THE SUB-GRADE. ALL MATERIALS WILL BE ACCEPTED IN- PLACE ONLY.

16. COMPACTION DENSITIES: MAG TYPE I BACKFILL MATERIAL (SECTION 601.4.4) IS MODIFIED TO INCLUDE AREAS UNDER THE PAVEMENT, ROW, AND EASEMENTS FOR ALL TRENCHES INCLUDING SEWER, WATER, ELECTRIC, AND GAS, TELEPHONE, AND STORM DRAINS, MOISTURE SPEC. 2.0 PERCENT BELOW OPTIMUM MOISTURE COMPACT TO 95% OF MAXIMUM THEORETICAL DENSITY. ALL MATERIALS OUTSIDE THE MOISTURE SPEC-LIMIT SHALL BE CONSIDERED UNSUITABLE, SUBJECT TO REMOVAL AND MATERIAL SHALL BE UNIFORM.

17. THE LOCATION OF ALL SEWER STUB-OUTS SHALL BE STAMPED ON THE TOP OF VERTICAL CURB, AND FACE OF ROLLED CURBS, WITH FOUR (4") INCH HIGH LETTERS (IE: 'S').

18. ALL CURB, GUTTER AND SIDEWALK SHALL BE FILLED WITH EXPANSION JOINT FILLER, ½" BITUMINOUS PRE-MOLDED STRIPS. ALL EXPANSION JOINT SPACING SHALL NOT EXCEED A MAXIMUM OF (50') FEET OR AS DIRECTED BY THE CITY ENGINEER. CONTRACTION JOINT SPACING SHALL BE EVERY FIVE (5) FEET OR AS DIRECTED BY THE CITY ENGINEER. CONCRETE CURING COMPOUND MATERIAL SHALL BE A WHITE PIGMENT MEMBRANE USED ON ALL CONCRETE STRUCTURES INCLUDING CURB & GUTTER, SIDEWALK, HEADWALL, CATCH BASINS AND SIDEWALK RAMPS.

19. PAVING WILL NOT COMMENCE UNTIL AGGREGATE BASE COURSE COMPACTION AND GRADATION TESTS ARE COMPLETED AND THE CITY ENGINEER ACCEPTS THE RESULTS.

20. USPS CLUSTER MAIL BOX LOCATIONS MUST BE PRE-DETERMINED AND NOTED ON THE CIVIL PLANS FOR GRADING AND PAVING. ADD CLUSTER BOXES TO THE LEGEND AND IN CONSTRUCTION NOTES. CLUSTER BOX LOCATIONS SHOULD BE SHOWN ON THE "OVERALL SEWER/WATER/HYDRANT/STREETLIGHT PLAN."

21. MEDIAN CURB & GUTTER BULL NOSE SHALL BE PAINTED YELLOW, WITH REFLECTIVE GLASS BEADS, PER MAG DTL-223, AND HAVE YELLOW PAVEMENT REFLECTORS INSTALLED AFTER THE PAINTING IS COMPLETE.

GRADING NOTES

1. SITE AREA: _____ NET ACRES.
2. APPROVED FINAL DRAINAGE REPORT: BY: _____, DATED: _____, _____. JOB NUMBER: # _____.
3. APPROVED GEO-TECHNICAL REPORT: BY: _____ _____, DATED: _____, _____. JOB NUMBER: #_____.
4. THE CONTRACTOR IS RESPONSIBLE FOR COMPLYING WITH ALL NECESSARY REGULATIONS AND REQUESTS BY THE CITY AND PINAL COUNTY REGARDING DUST CONTROL.
5. REMOVAL OF ALL CACTI AND NATIVE PLANTS SHALL BE IN ACCORDANCE WITH THE PROVISIONS OF THE "ARIZONA NATIVE PLANT LAW" A.R.S. CHAPTER 7.
6. CONTRACTOR MUST KEEP PUBLIC STREETS CLEAR OF SOIL, MUD, AND DEBRIS AT ALL TIMES.
7. CONTRACTOR MUST PREVENT DAMAGE TO DRAINAGE DURING GRADING CONSTRUCTION.
8. CONTRACTOR MUST REPAIR ANY DAMAGE TO PUBLIC OR PRIVATE PROPERTY THAT RESULTS FROM WORK DONE UNDER THE APPROVAL OF THE GRADING PERMIT.
9. IF SITE GRADING TOTALS MORE THAN ONE-TENTH (0.1) ACRE, CONTRACTOR MUST OBTAIN A PINAL COUNTY DUST CONTROL PERMIT. IF GRADING EXCEEDS ONE (1.0) ACRE, THIS ACTIVATES AZPDES AND CONTRACTOR MUST SUBMIT A NOI TO ADEQ AND PREPARE A STORM WATER MANAGEMENT PLAN ACCEPTABLE TO ADEQ.
10. ALL ON-SITE GRADING MUST COMPLY WITH CHAPTER 70 OF THE UNIFORM BUILDING CODE.
11. ALL GRADING IN THE PUBLIC ROW MUST COMPLY WITH MAG SPECIFICATIONS AND STANDARD DETAILS; THE ENGINEER'S APPROVED PLANS AND SPECIFICATIONS FOR THE PROJECT; AND THE SOILS ENGINEER'S GEOTECHNICAL REPORT FOR THE PROJECT.

(CONTINUATION GRADING NOTES)

12. SURVEYORS WILL SET CONSTRUCTION STATIONS, STAKES, ESTABLISHING LINES AND GRADES FOR ROADS, CURBS, GUTTERS, SIDEWALKS, STRUCTURES AND CENTERLINES FOR UTILITIES AND NECESSARY APPURTENANCES AS THEY MAY DEEM NECESSARY, THEY WILL FURNISH THE CONTRACTOR WITH ALL NECESSARY INFORMATION RELATING TO THE GRADES. THESE STAKES AND MARKS SHALL CONSTITUTE THE FIELD CONTROL, BY AND IN ACCORDANCE WITH, WHICH THE CONTRACTOR SHALL ESTABLISH OTHER NECESSARY CONTROLS TO PERFORM THE WORK. THE CONTRACTOR SHALL BE HELD RESPONSIBLE FOR THE PRESERVATION OF ALL STAKES AND MARKS, AND IF THE CONTRACTOR HAS CARELESSLY OR WILLFULLY DESTROYED THE CONSTRUCTION STAKES OR MARKS, THE COST FOR REPLACING THEM WILL BE CHARGED AGAINST HIM.
13. NO MINIMUM FLOOR ELEVATION SHALL BE LOWERED UNLESS APPROVED BY THE CITY ENGINEER.
14. ANY SLOPE THAT IS STEEPER THAN 3:1 SHALL BE RIP-RAPPED OR SHALL BE REVEGETATED.
15. ROW GRADING SHALL BE COMPLETED PRIOR TO THE FINAL WALK-THROUGH AND SHALL BE HELD TWO (2) INCH BELOW BACK OF WALK (B/W) OR TOP OF CURB (T/C).
16. THE CONTRACTOR SHALL PROVIDE A LEVEL BOTTOM (+/- 0.10') IN ALL RETENTION BASINS, AT THE ELEVATIONS SHOWN ON THE PLANS. RETENTION BASIN SIDE SLOPES SHALL NOT EXCEED 4:1, UNLESS APPROVED BY THE CITY ENGINEER AND NOTED ON THE PLANS.
17. RETENTION BASIN PERCOLATION TESTS SHALL BE PERFORMED AFTER GRADING IS COMPLETED AND PRIOR TO LANDSCAPING. PERCOLATION TESTS SHALL BE SUBMITTED TO THE CITY ENGINEER. RECOMMENDATIONS REGARDING NUMBER OF DRYWELLS REQUIRED TO MEET THE REQUIREMENTS OF THE CITY CODE WILL BE PRESENTED TO THE CITY ENGINEER FOR APPROVAL, AND THE FINAL NUMBER OF DRYWELLS REQUIRED SHALL BE DETERMINED BY THESE TESTS. AFTER THE FIRST DRYWELL INSTALLATION, A CONSTANT HEAD PRESSURE TEST WILL BE REQUIRED. THE DESIGN ENGINEER SHALL PROVIDE THE TOTAL NUMBER OF DRYWELLS REQUIRED AND SUBMIT THE CALCULATIONS TO THE CITY ENGINEER. DRYWELLS REQUIRE A PERMIT FROM THE ARIZONA DEPARTMENT OF ENVIRONMENTAL QUALITY AND ARIZONA DEPARTMENT OF ENVIRONMENTAL QUALITY DRYWALL REGISTRATION NUMBERS SHALL BE NOTED ON THE AS-BUILT PLANS.
18. GRADING PLAN AS-BUILTS: AS-BUILT CERTIFICATION OF THE ON-SITE GRADING BY THE DESIGN ENGINEER IS REQUIRED PRIOR TO FINAL ACCEPTANCE OF ANY ON-SITE GRADING OR DRAINAGE IMPROVEMENTS. AS-BUILT DRAWINGS OF THE PUBLIC IMPROVEMENTS BY THE DESIGN ENGINEER ARE REQUIRED PRIOR TO FINAL ACCEPTANCE OF THE PUBLIC IMPROVEMENTS. AS-BUILT GRADING PLANS SHALL BE PREPARED BY THE DESIGN ENGINEER AFTER GRADING IS COMPLETED. THESE SHALL INCLUDE BUT NOT BE LIMITED TO, AS-BUILT ELEVATIONS FOR: FINISHED PADS, ALL REAR PROPERTY CORNERS, TOP OF CURB AT ALL PROPERTY LINES, RETENTION BASIN BOTTOMS, SWALES, BERMS AND PERIMETER LANDSCAPE EASEMENTS, ANY AND ALL DEVIATIONS FROM THE APPROVED PLANS AT THE TIME OF COMPLETION OF MASS GRADING. IF ANY DRYWELLS HAVE BEEN INSTALLED, ADEQ DRYWELL REGISTRATION NUMBERS MUST BE MADE PART OF THE AS- BUILT PLANS.

STORM SEWER NOTES

1. CUT-OFF WALLS WITH A MINIMUM DIMENSION OF 18 INCHES IN HEIGHT SHALL BE USED AT ALL SCUPPERS, TERMINATIONS OF RIPRAP, CONCRETE STORM DRAINAGE CULVERTS AND CONCRETE SPILLWAYS BEHIND SCUPPERS 6' MINIMUM.
2. SAFETY RAILINGS SHALL BE PLACED ON ALL SCUPPERS ABOVE SPILLWAYS. PER MAG STD. DTL. 145.
3. TRASH RACKS ARE REQUIRED AT ALL INLETS AND OUTLETS OF STORM DRAIN HEAD WALLS FOR ALL PIPES 12" (INCHES) IN DIAMETER AND LARGER.
4. REINFORCED CONCRETE PIPE (RCP) SHALL BE PLACED PER MANUFACTURER'S SPECIFICATIONS AND IN ACCORDANCE WITH MAG STD. SPEC. 601, 716, AND 735.
5. ALL RIPRAP WITHIN CITY ROW SHALL BE GROUTED. ALL RIPRAP ON PRIVATE PROPERTY SHALL BE GROUTED AT THE DISCRETION OF THE CITY ENGINEER.
6. "U-TYPE" HEADWALLS WITH WING WALLS PER MAG STD. DTL. 501-3 OR 501-4 ARE REQUIRED FOR ALL EXPOSED STORM PIPE.
7. MANHOLE CONCRETE COLLAR SHALL BE ONE (1) FOOT DEEP AND ONE (1) FOOT WIDE OUTSIDE OF RIM CASTING. CLASS AA PER MAG SPECIFICATION 725 AND 505. CONCRETE COLLAR SHALL BE USED IN UNPAVED AS WELL AS PAVED AREAS. REINFORCED COLLARD WITH #4 STEEL REBAR HOOP CENTERED HORIZONTALLY AND VERTICALLY.
8. RETENTION BASINS SHOULD BE CONSTRUCTED WITH A TWO (2) FOOT BENCH AT TOP OF SIDE SLOPES.
9. ALL CMP AND RCP PIPE JOINTS SHALL BE JOINED WITH AN "O" RING OR GASKET TYPE WATERTIGHT SEAL.
10. ANY STORM DRAINS CROSSING UNDER PAVED CITY STREETS REQUIRE ABC BEDDING FOUR (4) INCHES BELOW THE PIPE AND ONE (1) FOOT ABOVE THE TOP OF THE PIPE. THE BEDDING IS TO BE PER MAG STD. SPEC. 702; MODIFIED COMPACTION TO 95% TYPICAL.
11. ALL STORM PIPES WITHIN CITY ROW SHALL BE RGRCP.
12. REINFORCED CONCRETE BOX CULVERTS SHALL BE CONSTRUCTED PER ADOT STANDARDS AND SPECIFICATIONS, TYPICAL.
13. CONSTRUCTION OF MANHOLE FOUNDATIONS FOR ALL STORM DRAIN BASES SHALL BE PER MAG STD SPEC 505 AND 725.
14. STORM PLAN AS-BUILTS: AS-BUILT STORM DRAIN PLANS PREPARED BY THE DESIGN ENGINEER SHALL INCLUDE, BUT NOT BE LIMITED TO, THE FOLLOWING: TOP OF CURB (TOC) ELEVATIONS AT OF EACH END OF SCUPPER, GUTTER ELEVATIONS AT CENTER OR FLOW-LINE OF EACH SCUPPER; INLET AND OUTLET INVERTS; HEADWALL TOP ELEVATIONS AND INVERTS; VALLEY GUTTER FLOW LINE ELEVATIONS; STORM MANHOLE RIM AND INVERT ELEVATIONS; DRYWELL RIM ELEVATIONS; PIPE DIMENSIONS AND LENGTHS, AND ANY AND ALL DEVIATIONS FROM APPROVED DRAWINGS.

PAVING NOTES

1. ALL PAVING NOTES SHALL COMPLY WITH THE RECOMMENDATIONS SET FORTH IN THE SOILS (GEO-TECHNICAL) REPORT FOR THIS PROJECT AND THE REFERENCED REQUIRED SPECIFICATIONS AND DETAILS. SOILS REPORT AND PAVEMENT DESIGN WERE PREPARED:
   BY: _____, JOB NO. _____, DATED: _____, _____.
2. THE CONTRACTOR SHALL VERIFY THE LOCATIONS, ELEVATIONS AND HORIZONTAL CONTROLS OF ALL EXISTING UTILITIES AT POINT OF TIE-IN PRIOR TO COMMENCING ANY NEW CONSTRUCTION. SHOULD ANY LOCATION, ELEVATION OR CONTROL DIFFER FROM THAT SHOWN ON THESE PLANS, THE CONTRACTOR SHALL CONTACT THE OWNER'S AGENT.
3. THE CONTRACTOR SHALL GIVE SEVENTY-TWO (72) HOURS NOTICE TO THE CITY ENGINEER PRIOR TO ANY CONSTRUCTION ACTIVITY WITHIN THE ROW.
4. THE CITY ENGINEER MUST APPROVE ALL PLAN REVISIONS IN WRITING PRIOR TO CONSTRUCTION OF ANY CHANGES TO APPROVED PLANS.
5. UPON COMMENCEMENT OF WORK, TRAFFIC CONTROL DEVICES PER THE APPROVED TRAFFIC CONTROL PLAN (TCP) SHALL BE POSTED AND MAINTAINED BY THE CONTRACTOR UNTIL SUCH TIME AS WORK IS COMPLETED.
6. REMOVAL AND RELOCATION OF ALL MAILBOXES, FENCES, SIGNS, GATES, POSTS PIPES, ETC., WITHIN THE ROW AND CONSTRUCTION LIMITS SHALL BE DIRECTED BY THE CITY ENGINEER.
7. 25 MPH SPEED LIMIT SIGNS SHALL BE LOCATED AT ALL ENTRANCES INTO A RESIDENTIAL SUBDIVISION DEVELOPMENT, 35 MPH SIGNS FOR COLLECTORS SHALL BE LOCATED PER THE PLANS.
8. CONCRETE COLLARS, ON ALL UTILITY AND SURVEY MONUMENT FRAME ADJUSTMENTS, ARE TO BE INSTALLED FLUSH WITH THE PROPOSED OR EXISTING PAVEMENT.
9. PAINT FOR PAVEMENT MARKING AND STRIPING SHALL BE THERMAL TRAFFIC PAINT APPLIED IN A SINGLE COAT AT A RATE OF 100 TO 110 SQ. FEET PER GALLON. TRAFFIC BEADS MUST BE INCLUDED.
10. STREET CUTS ON ASPHALT PAVEMENT: CUT EXISTING PAVEMENT ONE (1) FOOT FROM THE UTILITY TRENCH CUT, PER MAG DETAIL 200 TYPE (T) TOP; TACK EDGES (USING A19 MM PER MAG SECTION 710 ASPHALTIC CONCRETE HOT MIX). ASPHALT CONCRETE SHALL BE TESTED FOR COMPACTION TO 95%. THE CONTRACTOR, AT THEIR EXPENSE, WILL HAVE A PRIVATE LAB CORE TAKE SAMPLES AND RUN A MARSHALL TO COMPACTION FOR ACCEPTANCE OF ALL STREET CUTS. ALL REPLACEMENT PAVEMENTS SHALL MATCH EXISTING, UNLESS AUTHORIZED IN WRITING BY THE CITY ENGINEER.
11. ALL CONSTRUCTION AND TEST METHODS SHALL BE IN CONFORMANCE WITH THE CITY OF MARICOPA AND MARICOPA ASSOCIATION OF GOVERNMENTS (MAG) UNIFORM STANDARDS SPECIFICATIONS AND DETAILS FOR PUBLIC WORKS CONSTRUCTION, LATEST EDITION.
12. ASPHALTIC CONCRETE SHALL CONFORM TO MAG USSD SECTION 710 MIX SPECIFICATIONS.
13. ALL CONCRETE SHALL COMPLY WITH MAG SECTION 725, CLASS-A 3000-PSI COMPRESSIVE STRENGTH AT 28 DAYS, UNLESS OTHERWISE SPECIFIED. CONTRACTOR SHALL SUPPLY MIX DESIGN TO THE CITY ENGINEER FOR APPROVAL PRIOR TO PLACEMENT. CONTRACTOR SHALL SUPPLY A COPY OF EACH BATCH TICKET TO THE CITY ENGINEER OR HIS REPRESENTATIVE.
14. A COPY OF THE CITY APPROVED PLANS MUST BE KEPT ON-SITE AT ALL TIMES, DURING THE COURSE OF CONSTRUCTION.
15. ALL NEWLY CONSTRUCTED PAVEMENTS SHALL RECEIVE AN APPLICATION OF SEALANT (SS1H), APPROVED IN ADVANCE BY THE CITY ENGINEER AND PRIOR TO ACCEPTANCE INTO A WARRANTY PERIOD. HYDRANT REFLECTORS SHALL BE INSTALLED AFTER THE APPLICATION OF THE SEALANT. FOG SEAL SHALL BE APPLIED TO THE ROAD SURFACE 6 MONTHS TO 1 YEAR AFTER ASPHALT PLACEMENT. IT SHALL BE APPLIED BY A DISTRIBUTOR TRUCK EQUIPPED WITH FOG NOZZLES AT THE APPROXIMATE RATE OF 0.10 GALLON PER SQUARE YARD. THE EXACT RATE SHALL BE AS DIRECTED BY THE ENGINEER. THE DISTRIBUTOR TRUCK SHALL BE AS SPECIFIED IN M.A.G. SECTION 330.
16. ALL VISIBLE CRACKS WIDER THAN 1/8" SHALL BE SEALED AROUND MANHOLES, WATER VALVES AND SURVEY MONUMENTS AT THE DIRECTION OF THE CITY INSPECTOR.
17. IN THE EVENT OF ANY DISPUTE BETWEEN THESE PLANS AND MAG STANDARD SPECIFICATIONS, THESE APPROVED PLANS SHALL PREVAIL.
18. THE CONTRACTOR/OWNER IS RESPONSIBLE FOR FINAL ADJUSTMENT OF ALL MANHOLES, VALVES, CLEAN-OUTS, WATER METER BOXES, J-BOXES, ETC., AND RESTORATION OF CONSTRUCTION SITE TO MAG STANDARDS, INCLUDING ROW GRADING.
19. TESTING OF A/C MIX PRIOR TO PLACEMENT IS REQUIRED AND RESULTS ARE TO BE DELIVERED TO THE CITY ENGINEER OR HIS REPRESENTATIVE PRIOR TO PAVING.
20. ROLLING PATTERNS REQUIRED BY THE GEO-TECHNICAL TESTING FIRM SHALL BE SUPPLIED TO THE CITY ENGINEER'S REPRESENTATIVE.
21. CORE TESTING OF NEWLY CONSTRUCTED ASPHALT CONCRETE SURFACES MAY BE REQUIRED AT THE DISCRETION OF THE CITY ENGINEER. CORE TESTS ARE MANDATORY, ALONG WITH SUPPORTING MARSHALL TEST RESULTS, FOR ALL EXISTING ROADWAYS WHERE STREET CUTS ARE NECESSARY.
22. PROTECTION OF VALLEY GUTTERS, AND APRONS DURING PAVING OPERATIONS SHALL BE THE RESPONSIBILITY OF THE CONTRACTOR AND ALL DAMAGED CONCRETE SHALL BE REPLACED PRIOR TO ACCEPTANCE.
23. TACK SEAL SHALL BE REQUIRED BETWEEN LIFTS (UNLESS SECOND LIFT IS APPLIED ON THE SAME DAY AS FIRST LIFT) AND ALL VERTICAL CONCRETE SURFACES PRIOR TO PLACEMENT OF ASPHALT. THIS REQUIREMENT ALSO APPLIES TO VERTICAL ASPHALTIC CONCRETE SURFACES AND AT ALL JOINTS OF NEW LIFTS.
24. THE SURVEYOR SHALL PERFORM INSTALLATION AND STRADDLING OF MONUMENTS. ONCE STAMPED, DATUM SHALL BE PART OF THE AS-BUILT PLANS.
25. STREET SIGN BASES, POLES AND SIGNS SHALL BE INSTALLED PRIOR TO THE FINAL WALKTHROUGH AND ACCEPTANCE INTO ANY WARRANTY PERIOD.
26. ALL WARNING, REGULATORY AND STREET NAME SIGNS MUST BE MANUFACTURED OF "ASTM D-4956-01A-TYPE IX SHEETING". ALL OTHER SIGNS MUST BE MANUFACTURED WITH "ASTM D-4956-01A-TYPE III SHEETING" WHICH WILL BE ATTACHED TO THE STANDARD SIGN ALUMINUM PLATES. SIGN IMAGING SHALL BE IN COMPLIANCE WITH THE REFLECTIVE SHEETING MANUFACTURER'S MATCHED COMPONENT SYSTEM. SIGN IMAGING SHALL CONSIST OF AN ACRYLIC BASED ELECTRONIC FILM ABLE TO BE CUT 3M 1170 SERIES OR EQUIVALENT OR SILK-SCREENED (DEPENDING ON THE QUANTITY OF SIGNAGE) WITH STANDARD

(CONTINUATION PAVING NOTES)

HIGHWAY COLORS. IN ADDITION, A GRAFFITI-PROTECTIVE COATING, OF A PREMIUM PROTECTIVE OVERLAY FILM, 3M 1160 OR EQUIVALENT, SHALL BE USED ON ALL REGULATORY AND WARNING SIGNS. GRAFFITI PROTECTIVE COATING MUST BE DESIGNED TO COMPLY WITH THE UNDERLYING REFLECTIVE SHEETING MATCH COMPONENT SYSTEM.

27. ROW GRADING SHALL BE COMPLETED PRIOR TO THE FINAL WALK-THROUGH AND SHALL BE HELD ONE (1") INCH BELOW BACK OF WALK (B/W) OR TOP OF CURB (T/C).
28. PAVING AS-BUILT PLANS SHALL BE PREPARED BY THE DESIGN ENGINEER AND SHALL CERTIFY THAT THIS PROJECT WAS CONSTRUCTED IN SUBSTANTIAL CONFORMANCE WITH THE APPROVED PLANS PRIOR TO REQUEST FOR FINAL INSPECTION, CERTIFICATE OF OCCUPANCY OR RELEASE OF ASSURANCE.
29. FRESHLY PAVED FINISHED ROADWAY SHALL BE ¼" ABOVE THE LIP OF THE CONCRETE GUTTER. ASPHALT PAVING MACHINES SHALL BE EQUIPPED WITH AN ACTIVATED SCREED IN ORDER TO MAKE THE FIRST PASS (RIBBON) 17' OR GREATER.
30. SUB-GRADE PREPARATION FOR ALL SIDEWALKS, CURB AND GUTTER SHALL BE SCARIFIED AND LOOSENED TO A DEPTH OF 6 INCHES, AND SHALL BE CONSTRUCTED TO ACHIEVE A UNIFORM MOISTURE BY THE ADDITION OF WATER. MOISTURE SHALL BE MAINTAINED 2.0 PERCENT ABOVE OPTIMUM MOISTURE PRIOR TO PLACEMENT OF CONCRETE, AND COMPACTED TO 95 PERCENT OF MAXIMUM DENSITY. ALL MATERIALS OUTSIDE THE MOISTURE LIMIT SHALL BE CONSIDERED SUBJECT TO REMOVAL.
31. ANY PAVEMENT ADJACENT TO EXISTING ROW MUST MATCH THE EXISTING PAVEMENT DESIGN, UNLESS AUTHORIZED, IN WRITING, BY THE CITY ENGINEER.
32. NO DIESEL, OR OTHER CLEANING SOLVENTS, MAY BE APPLIED TO THE PAVING HOPPER, THE SCREED, OR THE AUGER IMMEDIATELY PRIOR TO BEGINNING OF THE PAVING OPERATION.
33. PAVING PLAN AS-BUILTS: AS-BUILT PLANS SHALL INCLUDE, BUT NOT BE LIMITED TO, THE FOLLOWING: HORIZONTAL AND VERTICAL CONTROL, CHANGES TO ANY GRADE BREAK LOCATIONS, TOP OF CURB (T/C) ELEVATIONS AT EACH CURB RETURN, PROPERTY CORNERS, GUTTER/FLOW LINE ELEVATIONS, SCUPPER AND CATCH BASIN INVERTS, MONUMENTATION, CROSS-SLOPES, VALLEY GUTTER FLOW LINE ELEVATIONS, HYDRANT REFLECTORS AND ANY, AND ALL, CHANGES TO THE APPROVED PLANS.

811 Know what's below. Call before you dig. 1-800-782-5348

REV NO.	COMMENT	DATE

CITY OF MARICOPA

(PROJECT NAME)
(DRAWING PACKAGE 1ST TITLE)
(DRAWING DESCRIPTION)

PROJ. NO.	DESIGNED	DRAWN	CHECKED	SHEET NO.
(XXXXX)	(XXX)	(XXX)	(XXX)	(XX) of (XX)

P:\Maricopa\06143 Design Standards Manual\Dwg\Cover Sheet\MAR-GNT.dwg Oct 09, 2018 12:10pm smazumdar

FIRE DEPARTMENT GENERAL NOTES TO THE CONTRACTOR

1. THE ACCEPTABLE PAPER SIZE SHALL BE LIMITED TO 24" X 36".

2. ALL BUILDINGS (EXCEPT GROUP R, DIVISION 3 [SEE BELOW] GROUP S–2 GREATER THAN 1,500 S.F. AND GROUP U OCCUPANCIES) SHALL BE PROVIDED WITH AN APPROVED AUTOMATIC FIRE SPRINKLER SYSTEM INSTALLED IN ACCORDANCE WITH FIRE CODE, NFPA 13, AND CITY OF MARICOPA FIRE CODE AMENDMENTS.

3. ONE (1) SET OF STAMPED AND APPROVED DRAWINGS SHALL BE KEPT ON–SITE AND MADE AVAILABLE TO CITY INSPECTORS ON DEMAND.

4. THE CONTRACTOR SHALL PROVIDE THE CITY INSPECTOR WITH A COPY OF THE FOLLOWING ITEMS UPON SUCCESSFUL COMPLETION OF THE SYSTEM AND PRIOR TO CITY ACCEPTANCE OF THE SYSTEM:

5. THE "CONTRACTOR'S MATERIAL AND TEST CERTIFICATE FOR ABOVEGROUND PIPING," IN ACCORDANCE WITH NFPA 13.

6. THE "CONTRACTOR'S MATERIAL AND TEST CERTIFICATE FOR UNDERGROUND PIPING," IN ACCORDANCE WITH NFPA 24.

7. THE "CERTIFICATE OF COMPLIANCE" FOR FIRE ALARM SYSTEMS IN ACCORDANCE WITH NFPA 72; UPON SUCCESS.

8. AUTOMATIC SPRINKLERS

a. FIRE PROTECTION SYSTEMS SHALL BE INSTALLED OR MODIFIED BY A CONTRACTOR LICENSED TO PERFORM SUCH WORK BY THE STATE OF ARIZONA.
ii. AUTOMATIC SPRINKLER SYSTEMS SHALL BE SUPERVISED BY AN APPROVED, PROPRIETARY, OR REMOTE SIGNAL STATION SERVICE; OR AN AUDIBLE SIGNAL SHALL SOUND AT A CONSTANTLY ATTENDED LOCATION WHEN THE NUMBER OF SPRINKLERS HEADS IS 20 OR MORE IN GROUP 1, DIVISION 1 OCCUPANCIES OR 100 OR MORE SPRINKLER HEADS IN ALL OTHER OCCUPANCIES.

9. FIRE DEPARTMENT ACCESS ROADWAYS

i. FIRE DEPARTMENT VEHICLE ACCESS ROADWAYS SHALL BE PROVIDED AND MAINTAINED THROUGHOUT CONSTRUCTION.
ii. TEMPORARY FIRE ACCESS ROADS SHALL BE A MINIMUM OF 20 FEET CLEAR WIDTH WITH SIX (6) INCHES OF 95% COMPACT AB OR MILLING ASPHALT.
iii. NO TRENCHING ACROSS FIRE ACCESS ROADS IS PERMITTED. REQUIRED WATER FIRE FLOW SHALL BE PROVIDED AND MAINTAINED THROUGHOUT CONSTRUCTION.
iv. ALL HYDRANTS SHALL BE APPROVED AND FUNCTIONAL PRIOR TO ANY COMBUSTIBLES BEING BROUGHT ONTO THE SITE.
v. FIRE APPARATUS ROADS SHALL BE DESIGNED TO REMAIN OPENED AT ALL TIMES AND MAINTAINED TO SUPPORT THE IMPOSED LOADS OF FIRE APPARATUS AND SHALL BE PROVIDED WITH A SURFACE SO AS TO PROVIDE ALL WEATHER DRIVING CAPABILITIES. THE FIRE APPARATUS ACCESS ROAD SHALL BE CONSTRUCTED IN A MANNER SATISFACTORY TO THE DIVISION OF FIRE PREVENTION.
vi. THE NECESSARY TURNING RADIUS FOR THE FIRE APPARATUS ROADS IS 26 FEET INSIDE AND 48 FEET OUTSIDE.

10. FIRE DEPARTMENT CONNECTIONS (FDC'S)

i. FIRE DEPARTMENT CONNECTIONS (FDC'S) FOR FIRE CODE, BUILDING CODE, AND NFPA 13 FIRE SPRINKLER SYSTEMS SHALL BE TWO, 2 ½ INCH, NATIONAL STANDARD THREAD, FEMALE SWIVELS. FDC'S FOR NFPA 13D AND 13R SPRINKLER SYSTEMS SHALL BE SINGLE 1 ½ INCH, NATIONAL STANDARD THREAD FEMALE SWIVELS WITH APPROVED NON–LOCKING METAL CAPS.
ii. ALL FIRE DEPARTMENT HOSE STATIONS AND STANDPIPE HOSE DISCHARGES FOR FIRE DEPARTMENT USE SHALL BE 2 ½ INCH, NATIONAL STANDARD THREAD, AND FEMALE SWIVELS. NO HOSE SHALL BE ATTACHED TO FIRE DEPARTMENT HOSE STATIONS.
iii. THE FIRE DEPARTMENT CONNECTION (FDC) MAY BE INSTALLED ON THE BUILDING (HOWEVER THIS IS NOT THE PREFERRED LOCATION), BACK FLOW DEVICE OR REMOTELY (PREFERRED LOCATION) AS APPROVED BY THE F.D. AND SHALL BE SO LOCATED THAT FIRE APPARATUS AND HOSE CONNECTED TO THE SUPPLY SYSTEM WILL NOT OBSTRUCT ACCESS TO THE BUILDING FOR OTHER FIRE APPARATUS.
iv. THE FDC SHALL BE LOCATED ON THE STREET SIDE OF THE BUILDING, FULLY VISIBLE AND RECOGNIZABLE FROM THE STREET OR NEAREST POINT OF FIRE DEPARTMENT VEHICLE ACCESS.
v. THE FDC SHALL BE LOCATED WITHIN 150 FEET OF A FIRE HYDRANT CONNECTED TO A PUBLIC WATER MAIN.
vi. THE FDC SHALL BE LOCATED NOT LESS THAN SIX (6) FEET OR NOT MORE THAN 150 FEET FROM AN APPROVED FIRE APPARATUS ROADWAY OR DRIVEWAY.
vii. A THREE (3) FOOT CLEARANCE MEASURED FROM THE CENTER OF THE FDC SHALL BE MAINTAINED AROUND THE CONNECTION. THERE SHALL NOT BE ANY LANDSCAPING, BUSHES, TREES, CACTUS OR RIVER ROCK WITHIN THREE FEET OF THE CONNECTION OR BETWEEN THE CURB AND THE FDC.
viii. THE FDC SHALL NOT BE LOCATED WITHIN A RETENTION AREA OR BEHIND WALLS.
ix. FDC INLETS SHALL BE LOCATED 36" ABOVE THE FINISHED GRADE.
x. THE FDC SHALL BE PAINED BRILLIANT RED.
xi. THE FDC LOCATION SHALL BE APPROVED BY THE DIVISION OF FIRE PREVENTION.

WATER NOTES

1. ALL WORK AND MATERIALS SHALL CONFORM TO GLOBAL WATER' S STANDARDS, AS WELL AS ARIZONA DEPARTMENT OF ENVIRONMENTAL QUALITY (ADEQ) STANDARDS, CURRENT MAG SPECIFICATIONS, AND ANY REQUIREMENT OF THE LOCAL GOVERNING AUTHORITY, AS APPLICABLE. IN THE EVENT OF A CONFLICT, THE MORE STRINGENT REQUIREMENT SHALL GOVERN.

2. PRIOR TO CONSTRUCTION, ALL PERMITS SHALL BE SECURED AS REQUIRED FROM THE APPROPRIATE GOVERNING AGENCIES. COPIES OF ALL PERMITS SHALL BE PROVIDED TO GLOBAL WATER' S INSPECTOR PRIOR TO THE PRE–CONSTRUCTION MEETING.

3. MORTAR–LINED DUCTILE IRON PIPE SHALL BE USED IN ACCORDANCE WITH MAG SECTION 750. POTABLE WATERLINES SHALL BE BLUE POLYETHYLENE WRAPPED, RAW WATER TRANSMISSION WATERLINES SHALL BE BLACK POLYETHYLENE WRAPPED FOR THE ENTIRE LENGTH IN ACCORDANCE WITH MAG SECTION 610.5.

4. ALL WATERLINES LESS THAN 12 INCHES MUST HAVE A MINIMUM COVER OF 36 INCHES OVER THE TOP OF THE PIPE TO FINISH GRADE, PIPES 12 INCHES AND LARGER SHALL HAVE A MINIMUM COVER OF 48 INCHES. ALL WATER SERVICES SHALL HAVE A MINIMUM COVER OF 30 INCHES.

5. ALL VALVE BOXES SHALL BE ADJUSTED TO FINISHED GRADE IMMEDIATELY AFTER PLACING OF ASPHALT CONCRETE SURFACE. ALL VALVES IN PAVEMENT OR CONCRETE SHALL HAVE LOCKING LID COVERS. ANY VALVES LOCATED OUTSIDE OF THE PAVING SECTION WILL BE REQUIRED TO HAVE DEBRIS CAPS, IN FACT CORP. MUD PLUGS OR AN APPROVED EQUAL.

6. ALL WATER LINES MUST BE DISINFECTED PER ADEQ ENGINEERING BULLETIN #8 OR AWWA C651–86. WRITTEN TESTS RESULTS ARE TO BE GIVEN TO GLOBAL WATER' S INSPECTOR.

7. ALL BENDS AND FITTINGS SHALL BE MECHANICAL JOINT IN ACCORDANCE WITH AWWA C111 AND MAG SECTION 750.4. JOINT RESTRAINTS SHALL BE FIELD LOK 350 GASKET JOINT RESTRAINT OR EBBA SERIES 2000 PV MECHANICAL JOINT RESTRAINT IN ACCORDANCE WITH MAG 303–1 & 2. CONCRETE THRUST BLOCKS, AS A SUBSTITUTE FOR RESTRAINED JOINTS, ARE NOT ACCEPTABLE.

8. ALL PIPES, FITTINGS, VALVES, COATINGS, ETC. SHALL CONFORM TO NSF STANDARDS 61.

9. CONTRACTOR SHALL INSTALL BLUE LOCATING TAPE ONE FOOT ABOVE TOP OF WATER MAINS PRIOR TO BACKFILL.

10. ALL VALVES 8 TO 16 INCHES SHALL BE CLOW, MUELLER, U.S. PIPE OR KENNEDY RESILIENT SEATED GATE VALVE IN ACCORDANCE WITH AWWA C509 AND MAG 630–3. VALVES LARGER THAN 16 INCHES SHALL BE BUTTERFLY TYPE IN ACCORDANCE WITH AWWA STANDARDS C504 LOCATED WITHIN AN OPERATING MANHOLE WITH A BYPASS.

11. ALL FIRE HYDRANTS SHALL BE CLOW MEDALLION OR MUELLER IN SPECIFIC LOCATIONS WITH A MINIMUM 3 FOOT BURY DEPTH, 5–1/4 INCH MAIN VALVE OPENING, ONE 4 ½ INCH NST PUMPER CONNECTION WHICH FACES THE CURB OR SIDEWALK, AND TWO 2– ½ INCH NST HOSE CONNECTIONS. NO SUBSTITUTIONS WILL BE ALLOWED. ELEVATION AND LOCATION OF THE HYDRANT FLANGE SHALL CONFORM TO GLOBAL WATER STANDARD DETAIL 360–1 AND 360–2.

12. ALL SERVICE SADDLES SHALL BE MUELLER BR2B DOUBLE STRAPPED FOR DUCTILE IRON PIPE OR APPROVED EQUAL.

13. BACKFLOW PREVENTERS FOR COMMERCIAL/IRRIGATION SIZES ¾" TO 2 ½" SHALL BE REDUCED PRESSURE ASSEMBLIES AND SHALL HAVE A CERTIFICATE OF APPROVAL ISSUED BY USC–FCCCHR IN ACCORDANCE WITH AAC R18–4–115. ALL ASSEMBLIES SHALL BE INSTALLED IN ACCORDANCE WITH GLOBAL WATER STANDARD DETAIL 351–1. A CERTIFIED TEST MUST BE SUBMITTED TO GLOBAL WATER'S COMPLIANCE DEPARTMENT WITHIN 24 HOURS OF THE METER INSTALLATION. ACCEPTANCE OF THE WATER FACILITIES WILL NOT BE GRANTED PRIOR TO BACKFLOW PREVENTION APPROVAL. ALL COMMERCIAL/IRRIGATION BACKFLOW PREVENTER SIZES ¾" TO 2 ½" SHALL HAVE A TAN QUALITY ENCLOSURE OR EQUAL, AND SIZED ACCORDINGLY.

14. BACKFLOW PREVENTER FOR FIRE LINES 3'–10" SHALL BE DOUBLE CHECK ASSEMBLIES AND SHALL HAVE A CERTIFICATE OF APPROVAL ISSUED BY USC -FCCCHR IN ACCORDANCE WITH AAC R18–4–115. ALL ASSEMBLIES SHALL BE INSTALLED IN ACCORDANCE WITH GLOBAL WATER STANDARD DETAIL 350–2. A CERTIFIED TEST MUST BE SUBMITTED TO GLOBAL WATER' S COMPLIANCE DEPARTMENT WITHIN 24 HOURS OF THE METER INSTALLATION. ACCEPTANCE OF THE WATER FACILITIES WILL NOT BE GRANTED PRIOR TO BACKFLOW PREVENTION APPROVAL.

15. AIR RELEASE VALVES SHALL BE ARI MODEL D -040 OR ABCO 140 C FOR WATERLINES UP TO 12 INCHES IN DIAMETER, FOR LINES LARGER THAN 12 INCHES ARI D060 OR ABCO 147/148 SHALL BE INSTALLED PER GLOBAL WATER DETAIL 388–1. ALL AIR RELEASE VALVES SHALL HAVE A TAN QUALITY ENCLOSURE OR EQUAL, AND SIZED ACCORDINGLY.

16. GLOBAL WATER'S INSPECTOR SHALL BE NOTIFIED A MINIMUM OF 48 HOURS PRIOR TO THE START OF WORK AND EACH TEST EVENT. WEEKENDS AND HOLIDAYS ARE NOT CONSIDERED AS PART OF THE NOTIFICATION PERIOD.

(CONTINUATION WATER NOTES)

17. TO ENSURE BACKFILL AND CONCRETE PLACEMENT IS COMPLETED PER GLOBAL WATER DETAIL 200 AND MAG 601 PLAN SPECIFICATIONS, COPIES OF ALL CONCRETE AND COMPACTION TEST REPORTS SHALL BE SUBMITTED TO GLOBAL WATER UPON COMPLETION OF EACH TESTING EVENT.

18. ALL WORK WILL BE SUBJECTED TO A TWO (2) YEAR WARRANTY PERIOD THAT DOES NOT BEGIN UNTIL THE BILL OF SALE HAS BEEN COMPLETED. SEE GLOBAL WATER DESIGN STANDARD, FINAL ACCEPTANCE/BILL OF SALE.

19. IN ACCORDANCE WITH AAC R18–9 E301, SEPARATION BETWEEN WATER (POTABLE, RECLAIMED OR STORM DRAIN) AND SEWER MAIN SHALL COMPLY WITH THE REQUIREMENTS OF 18 AAC 5, ARTICLE 5 AND MAG 404–1, 2 AND 3. WHERE A WATERLINE CROSSES A RECLAIMED WATERLINE, STORM DRAIN, OR OTHER NON–POTABLE LINE, THEY SHALL BE CONSIDERED SEWER.

WATER NOTES TO THE CONTRACTOR

1. FINAL ACCEPTANCE OF UNDERGROUND FACILITIES BY GLOBAL WATER SHALL BE IN ACCORDANCE WITH GLOBAL WATER DESIGN STANDARD, ACCEPTANCE OF UNDERGROUND UTILITIES.

2. WATER METERS WILL NOT BE INSTALLED TO ANY WATER SERVICE LOCATION UNTIL ALL FACILITIES HAVE BEEN INSPECTED AND APPROVED BY GLOBAL WATER. ALL WATER METERS SHALL BE OBTAINED THROUGH GLOBAL WATER.

3. IT SHALL BE THE CONTRACTOR'S SOLE RESPONSIBILITY TO VERIFY THE PRESENCE AND LOCATION OF ANY AND ALL EXISTING OVERHEAD AND/OR UNDERGROUND UTILITIES THAT MAY INTERFERE WITH THIS CONSTRUCTION, WHETHER OR NOT SAID UTILITIES ARE SHOWN ON THE CONSTRUCTION PLANS FOR THIS PROJECT. CONTRACTOR SHALL ADEQUATELY PROTECT AND MAINTAIN SUCH UTILITIES TO AVOID ANY DAMAGE.

4. IT SHALL BE THE CONTRACTOR'S RESPONSIBILITY TO COORDINATE WITH THE ENGINEER OF RECORD OR SURVEYOR, AND PROVIDE SUFFICIENT TIME FOR SAID ENGINEER OF RECORD OR SURVEY OR TO LOCATE ALL FACILITIES FOR AS–BUILT PURPOSES. ALL HORIZONTAL BENDS, TEES, AND VERTICAL REALIGNMENTS MUST BE LEFT EXPOSED UNTIL SUFFICIENT AS]BUILT INFORMATION HAS BEEN OBTAINED. QUANTITIES SHALL BE CORRECTED TO REFLECT THE ACTUAL NUMBER OF FACILITIES INSTALLED. FINAL ACCEPTANCE OF THE WATER FACILITIES WILL NOT BE ISSUED UNTIL AS]BUILT DRAWINGS HAVE BEEN REVIEWED AND ACCEPTED BY GLOBAL WATER.

5. ANY CONSTRUCTION PERFORMED WITHOUT THE KNOWLEDGE OF THE GLOBAL WATER INSPECTOR, OR HIS REPRESENTATIVE, IS CONSIDERED AT RISK AND LIABLE FOR REMOVAL AND RE–PLACEMENT AT THE CONTRACTOR'S EXPENSE.

6. PRIOR TO THE START OF CONSTRUCTION, CONTRACTOR SHALL SCHEDULE A PRE–CONSTRUCTION MEETING AT THE JOB SITE WITH GLOBAL WATER'S INSPECTOR. GLOBAL WATER'S INSPECTOR CAN BE REACHED AT (480) 560]5702.

7. COPIES OF ALL TEST RESULTS SHALL BE GIVEN TO GLOBAL WATER.

8. REVIEW OF PLANS FOR COMPLIANCE WITH GLOBAL WATER'S REQUIREMENTS SHALL NOT PREVENT ANY CORRECTION OF ERRORS FOUND TO BE IN VIOLATION OF ANY APPLICABLE STANDARDS OF THE UTILITY OR ANY OTHER GOVERNMENTAL AGENCY.

9. ALLOWABLE PIPE DEFLECTION FOR DUCTILE IRON PIPE.

TYPE	SIZE	MAX. JOINT DEFLECTION	MAX. OFFSET PER JOINT	MIN. RADIUS
DIP	8"–12"	2.5 DEGREES	8.3 INCHES	412.3
DIP	14"–16"	2.0 DEGREES	7.2 INCHES	515.5
DIP	18"–24"	1.5 DEGREES	5.3 INCHES	687.3

THE MAXIMUM DEFLECTION ANGLE SHALL NOT EXCEED ½ OF THE MANUFACTURER'S RECOMMENDATIONS. THE MAXIMUM OFFSET PER JOINT, IN THE ABOVE REFERENCED TABLE, IS BASED ON AN 18 FOOT LYING LENGTH OF PIPE TO GET THE MAXIMUM OFFSET. IF A DIFFERENT LAYING LENGTH IS USED, THE ENGINEER IS TO CALCULATE THE REQUIRED OFFSET.

10. FOR COMMERCIAL SITES AND AREAS OUTSIDE OF RIGHTS OF WAY, ALL VERTICAL AND HORIZONTAL BENDS SHALL BE MARKED WITH 3M BALL MARKERS OR EQUAL. MARKERS SHALL BE LOCATED AT AN ELEVATION OF 1 FOOT OVER TOP OF PIPE FOR TRENCHES 5 FEET OR LESS. FOR TRENCHES GREATER THAN 5 FEET, BALL MARKER LOCATIONS SHALL NOT EXCEED 4 FEET BELOW FINISHED GRADE LINE.

11. CONNECTION TO EXISTING WATER STUBS WILL NOT BE ALLOWED UNTIL ALL FACILITIES HAVE BEEN TESTED. A TEMPORARY CONNECTION WILL BE REQUIRED IN ORDER TO PROVIDE WATER FOR TESTING, FLUSHING AND GENERAL CONSTRUCTION. THE CONTRACTOR WILL BE REQUIRED TO SECURE A METER AND BACKFLOW DEVICE FROM GLOBAL WATER. THE NUMBER OF CONNECTION POINTS SHALL BE DETERMINED BY GLOBAL WATER. ANY OTHER CONNECTIONS WILL NOT BE ALLOWED UNTIL ALL ON SITE FACILITIES HAVE BEEN TESTED. UPON ACCEPTANCE OF THE WATER FACILITIES, THE METER AND BACKFLOW DEVICES SHALL BE REMOVED AND ALL TEMPORARY CONNECTIONS COMPLETED.

SEWER NOTES

1. CONSTRUCTION OF SEWER FACILITIES SHALL BEGIN WITHIN 1 YEAR FROM GLOBAL WATER'S APPROVAL DATE ON THE PLANS. IF CONSTRUCTION HAS NOT STARTED WITHIN 1 YEAR, PLANS SHALL BE RESUBMITTED TO GLOBAL WATER FOR REVIEW AND APPROVAL, AND SHALL INCLUDE A NEW APPROVAL TO CONSTRUCT ("ATC") ISSUED BY THE ARIZONA DEPARTMENT OF ENVIRONMENTAL QUALITY ("ADEQ"), PRIOR TO START OF CONSTRUCTION.

2. ALL WORK AND MATERIALS SHALL CONFORM TO GLOBAL WATER'S STANDARDS, ADEQ STANDARDS, CURRENT MAG SPECIFICATIONS, AND ANY REQUIREMENTS OF THE LOCAL GOVERNING AUTHORITY, AS APPLICABLE. IN THE EVENT OF A CONFLICT, THE MORE STRINGENT REQUIREMENT SHALL GOVERN. FAILURE TO MEET ANY OF THESE REQUIREMENTS SHALL BE CAUSE FOR REJECTION.

3. PRIOR TO CONSTRUCTION, ALL PERMITS SHALL BE SECURED AS REQUIRED FROM THE APPROPRIATE GOVERNING AGENCIES.

4. SEWER LINE CONSTRUCTION SHALL BE SDR35 PVC IN ACCORDANCE WITH MAG SPECIFICATION SECTION 615, ASTM D–3034 AND ASTM F–679 OR CERAMIC EPOXY DUCTILE IRON PIPE. ALL DUCTILE IRON PIPE SHALL BE POLYETHYLENE WRAPPED FOR THE ENTIRE LENGTH IN ACCORDANCE WITH MAG SECTION 610.5 VCP. CONCRETE PIPES ARE NOT ACCEPTABLE AND CURVILINEAR SEWER LINES ARE NOT ALLOWED.

5. SEWER LINES REQUIRE A MINIMUM OF 6 FEET OF COVER FROM TOP OF PIPE TO FINISHED GRADE.

6. MANHOLES SHALL BE PRECAST CONCRETE IN ACCORDANCE WITH GLOBAL WATER DETAIL 421. MANHOLES SHALL NOT HAVE STEPS INSTALLED. GLOBAL WATER SHALL BE PROVIDED WITH AN H–20 LOAD CERTIFICATION FROM THE MANUFACTURER FOR ADJUSTING RINGS, CONES, ETC. MANHOLES SHALL BE TREATED WITH INSECT TREATMENT AS SOON AS THE MANHOLE IS RAISED TO GRADE AND PRIOR TO FINAL ACCEPTANCE. DOCUMENTATION OF TREATMENT IS TO BE PROVIDED TO GLOBAL WATER.

7. MANHOLE COVERS SHALL BE CAST IRON IN ACCORDANCE WITH MAG SPECIFICATIONS AND SHALL BE 24" OR 30" RING AND COVER, DEETER DF 1295 OR DF 1296. GLOBAL WATER SHALL BE PROVIDED WITH H–20 LOAD CERTIFICATION FROM THE MANUFACTURER FOR CAST IRON RING AND COVERS PER CID A–A 60005.

8. ALL MANHOLES SHALL BE TREATED WITH SEWER SHIELD 100, RAVEN 405 OR AN APPROVED EQUAL COATING AND SHALL BE APPLIED IMMEDIATELY AFTER MANHOLE IS RAISED TO GRADE. COATING SHALL BE INSTALLED AND TESTED IN THEIR ENTIRETY IN ACCORDANCE WITH MANUFACTURER'S RECOMMENDATIONS.

9. WATER TIGHTNESS OF SEWER MANHOLES SHALL BE DETERMINED BY VACUUM TEST PER ASTM C–1244.

10. ALL SEWER LINES MUST BE TESTED USING LOW PRESSURE AIR TESTING IN ACCORDANCE WITH AAC R18–9–E301(D)(2)(j)(i).

11. THE TOTAL LENGTH OF SEWER LINE MUST BE TESTED FOR UNIFORM SLOPE IN ACCORDANCE WITH AAC R18–9–E301(D)(2)(k).

12. DEFLECTION TESTING SHALL BE DONE ON ALL SEWER LINES TO ENSURE THE INSTALLATION MEETS OR EXCEEDS THE MANUFACTURER'S RECOMMENDATIONS IN ACCORDANCE WITH AAC R18–9–E301(D)(2)(i).

13. ALL WORK WILL BE SUBJECTED TO A TWO (2) YEAR WARRANTY PERIOD AND DOES NOT BEGIN UNTIL THE BILL OF SALE HAS BEEN COMPLETED. SEE GLOBAL WATER DESIGN STANDARD, FINAL ACCEPTANCE/BILL OF SALE.

SEWER NOTES TO THE CONTRACTOR

1. FINAL ACCEPTANCE OF UNDERGROUND FACILITIES BY GLOBAL WATER SHALL BE IN ACCORDANCE WITH DESIGN STANDARD, ACCEPTANCE OF UNDERGROUND FACILITIES.

2. PRIOR TO ACCEPTANCE, A VIDEO SURVEY OF THE ENTIRE SEWER SYSTEM MAINLINE AND SERVICES SHALL BE COMPLETED. AFTER THE PLUMBING CONNECTION HAS BEEN COMPLETED, AND PRIOR TO OBTAINING A WATER METER, A VIDEO SURVEY WILL BE REQUIRED FROM THE CLEAN OUT CONNECTION POINT TO THE SEWER MAIN. A COPY OF THE VIDEO SHALL BE GIVEN TO GLOBAL WATER.

3. WATER METERS WILL NOT BE INSTALLED TO ANY WATER SERVICE LOCATION UNTIL ALL SEWER FACILITIES HAVE BEEN INSPECTED AND APPROVED BY GLOBAL WATER, A VIDEO SURVEY HAS BEEN COMPLETED, ALL AGENCIES APPROVALS HAVE BEEN SUBMITTED, INCLUDING EASEMENTS AND AS–BUILTS.

4. IT SHALL BE THE CONTRACTOR'S SOLE RESPONSIBILITY TO VERIFY THE PRESENCE AND LOCATION OF ANY AND ALL EXISTING OVERHEAD AND/OR UNDERGROUND UTILITIES THAT MAY INTERFERE WITH THIS CONSTRUCTION, WHETHER OR NOT SAID UTILITIES ARE SHOWN ON THE CONSTRUCTION PLANS FOR THIS PROJECT. CONTRACTOR SHALL ADEQUATELY PROTECT AND MAINTAIN SUCH UTILITIES TO AVOID ANY DAMAGE.

5. IT SHALL BE THE CONTRACTOR'S RESPONSIBILITY TO UNCOVER ALL EXISTING SEWER LINES BEING CONNECTED TO, AND TO VERIFY THE LOCATION, EXISTING INVERT, SLOPE AND PIPE SIZE PRIOR TO CONSTRUCTION. IF SIZE AND SLOPE DO NOT MATCH A MANHOLE, THE MANHOLE SHALL BE CONSTRUCTED AT THE CONNECTION POINT.

6. IT SHALL BE THE CONTRACTOR'S RESPONSIBILITY TO COORDINATE WITH THE ENGINEER OF RECORD OR SURVEYOR, AND PROVIDE SUFFICIENT TIME FOR SAID ENGINEER OF RECORD OR SURVEYOR, TO LOCATE ALL FACILITIES FOR AS–BUILT PURPOSES. FINAL ACCEPTANCE OF THE SEWER FACILITIES WILL NOT BE ISSUED UNTIL AS–BUILT DRAWINGS HAVE BEEN REVIEWED AND ACCEPTED BY GLOBAL WATER.

7. ANY CONSTRUCTION PERFORMED WITHOUT THE KNOWLEDGE OF THE GLOBAL WATER INSPECTOR, OR HIS REPRESENTATIVE, IS CONSIDERED AT RISK AND LIABLE FOR REMOVAL AND RE–PLACEMENT AT THE CONTRACTOR'S EXPENSE.

8. PRIOR TO THE START OF CONSTRUCTION, CONTRACTOR SHALL SCHEDULE A PRE–CONSTRUCTION MEETING AT THE JOB SITE WITH GLOBAL WATER'S INSPECTOR. GLOBAL WATER'S INSPECTOR CAN BE REACHED AT 480–560–5702.

9. COPIES OF ALL TEST RESULTS SHALL BE GIVEN TO GLOBAL WATER, INCLUDING CONCRETE BATCH TICKETS FROM DELIVERY TRUCKS, TO VERIFY TYPE A 3000 PSI CONCRETE.

10. SUB–GRADE UNDER ALL MANHOLE BASES SHALL BE COMPACTED TO 95% DENSITY, TO INCLUDE AN AREA OF 1 FOOT BEYOND THE MANHOLE DIAMETER.

11. REVIEW OF THE PLANS FOR COMPLIANCE WITH GLOBAL WATER'S REQUIREMENTS SHALL NOT PREVENT ANY CORRECTION OF ERRORS FOUND TO BE IN VIOLATION OF ANY APPLICABLE STANDARDS OF THE UTILITY OR ANY OTHER GOVERNMENTAL AGENCY.

P:\Maricopa\06143 Design Standards Manual\Dwg\Cover Sheet\MAR–GN2.dwg Oct 09, 2018 12:24pm smazumdar

REV NO.	COMMENT	DATE

CITY OF MARICOPA

(PROJECT NAME)
(DRAWING PACKAGE 1ST TITLE)
(DRAWING DESCRIPTION)

PROJ. NO.	DESIGNED	DRAWN	CHECKED	SHEET NO.
(XXXXX)	(XXX)	(XXX)	(XXX)	(XX) of (XX)

811 Know what's below. Call before you dig. 1-800-782-5348

SIGNING NOTES

1. THE CITY ENGINEER MAY REQUIRE THE CONTRACTOR TO ADJUST SIGNING AS NECESSARY.
2. SIGN LOCATIONS AND OFFSETS MAY REQUIRE THE CONTACTOR TO ADJUST THEM BY THE CITY ENGINEER TO IMPROVE VISIBILITY.
3. ALL WARNING, REGULATORY AND ARTERIAL STREET NAME SIGNS MUST BE MANUFACTURED OF "ASTM D-4956-04 PROPOSED TYPE XI SHEETING" (3M DG3 4090 SERIES OR EQUIVALENT) ALL OTHER SIGNS MUST BE MANUFACTURED WITH "ASTM D-4956-04 TYPE IV SHEETING" (3M3930 SERIES OR EQUIVALENT) WHICH WILL BE ATTACHED TO THE STANDARD SIGNAGE ALUMINUM PLATES. SIGN IMAGING SHALL BE IN COMPLIANCE WITH THE REFLECTIVE SHEETING MANUFACTURES MATCHED COMPONENT SYSTEM. SIGN IMAGING SHALL CONSIST OF AN ACRYLIC BASED ELECTRONIC CUTTABLE FILM (3M 1170 SERIES OR EQUIVALENT) OR SILK SCREENED (DEPENDING ON THE QUANTITY OF SIGNAGE) WITH STANDARD HIGHWAY COLORS. IN ADDITION, IF CALLED OUT ON PLANS, TO CREATE A GRAFFITI-PROTECTIVE COATING, A PREMIUM PROTECTIVE OVERLAY FILM 3M 1160 OR EQUIVALENT SHALL BE USED WHICH IS DESIGNATED TO COMPLY WITH THE UNDERLYING REFLECTIVE SHEETING MATCH COMPONENT SYSTEM.
4. WARRANTY DOCUMENTS ARE REQUIRED AND MUST BE SUBMITTED PRIOR TO JOB ACCEPTANCE.
5. "NO PARKING" SIGNS SHALL BE R8-3A (12" X 18") MODIFIED WITH A LOWER ARROW PLAQUE. THEY SHALL BE PLACED APPROXIMATELY FIVE (5) FOOT FROM BACK-OF-CURB AND 45? TO THE CURB.
6. SPEED LIMIT SIGNS (R2-1) ARE TO BE INSTALLED AT FOUR (4) PER DIRECTION OF TRAVEL PER MILE.
7. STOP SIGNS (R2-1) ARE TO BE 30 INCH X 30 INCH MINIMUM SIZE.
8. STREET NAME SIGNS IN SUBDIVISIONS SHALL CONFORM TO THE CITY OF MARICOPA STANDARD COLORS, FONT, AND STYLE. PRIVATE STREET NAME SIGNS MUST INCLUDE YELLOW CHEVRONS TWO (2) INCHES AT EACH END OF THE SIGN TO DESIGNATE A PRIVATE STREET.
9. ADVANCE STREET NAME SIGNS ARE TO BE INSTALLED AT A HEIGHT OF FOUR (4) FEET TO THE BOTTOM OF THE SIGN AND PLACED SO THEY ARE NOT OBSTRUCTED BY VEGETATION. SIGNS ARE TO BE INSTALLED IN MEDIANS WHENEVER POSSIBLE.
10. ALL EXISTING SIGNS TEMPORARILY REMOVED BY THE CONTRACTOR MUST BE SALVAGED FOR REINSTALLATION BY THE CONTRACTOR.
11. ALL EXISTING SIGNS PERMANENTLY REMOVED BY THE CONTRACTOR MUST BE SALVAGED AND RETURNED TO PUBLIC WORKS.

STRIPING NOTES

1. THE CITY ENGINEER MAY REQUIRE THE CONTRACTOR TO ADJUST STRIPING AS NECESSARY.
2. ALL PERMANENT LONGITUDINAL PAVEMENT STRIPING (CENTERLINES, LANE LINES, BAY LINES) MUST USE 60 MIL. HOT-SPRAYED OR EXTRUDED THERMOPLASTIC. REFLECTIVE GLASS BEADS MUST BE APPLIED IN ACCORDANCE WITH SECTION 704 OF ADOT'S STANDARD SPECIFICATIONS FOR ROAD AND BRIDGE CONSTRUCTION.
3. ALL PERMANENT LATERAL PAVEMENT STRIPING (STOP BARS, CROSSWALK LINES) MUST USE 90 MIL. HOT-SPRAYED OR EXTRUDED THERMOPLASTIC. REFLECTIVE GLASS BEADS MUST BE APPLIED IN ACCORDANCE WITH SECTION 704 OF ADOT'S STANDARD SPECIFICATIONS FOR ROAD AND BRIDGE CONSTRUCTION.
4. ALL TEMPORARY PAVEMENT MARKINGS MUST USE REFLECTIVE TRAFFIC PAINT.
5. ALL MEDIAN NOSES MUST BE PAINTED YELLOW WITH REFLECTIVE GLASS BEADS FROM THE TIP OF THE MEDIAN BACK TEN (10) FEET.
6. ALL RAISED PAVEMENT REFLECTORS MUST BE INSTALLED WITH CRAFCO PAVEMENT REFLECTOR ADHESIVE, OR EQUIVALENT.
7. ALL CONFLICTING PAVEMENT MARKINGS MUST BE OBLITERATED BY MEANS OF WATER BLASTING BY THE CONTRACTOR.
8. A SEALANT APPROVED BY THE CITY ENGINEER MUST BE APPLIED BY THE CONTRACTOR TO ALL AREAS WHERE PAVEMENT MARKINGS HAVE BEEN OBLITERATED.

ABBREVIATIONS

ABC	AGGREGATE BASE COURSE
AC	ASPHALT CONCRETE
BC	BACK OF CURB
BCF	BRASS CAP FLUSH
BCHH	BRASS CAP IN HAND HOLE
BCR	BEGIN CURB RETURN
BM	BENCHMARK
BTM	BOTTOM
CB	CATCH BASIN
C/L	CENTERLINE
CMP	CORRUGATED METAL PIPE
CO	CLEAN OUT
CONC	CONCRETE
CONST	CONSTRUCTION
CY	CUBIC YARD
D/W	DRIVEWAY
DWG	DRAWING
DTL	DETAIL
E	EAST
ECR	END CURB RETURN
ELEV	ELEVATION
EP	EDGE OF PAVEMENT
ESMT	EASEMENT
EX, EXIST	EXISTING
FC	FACE OF CURB
FF	FINISHED FLOOR
FG	FINISHED GRADE
FH	FIRE HYDRANT
FL	FLANGE
FND	FOUND
FO	FIBER OPTIC
FPS	FEET PER SECOND
FT	FOOT, FEET
G	GAS, GUTTER, GRADE
GB	GRADE BREAK
GPM	GALLONS PER MINUTE
HDPE	HIGH DENSITY POLYETHYLENE PIPE
HP	HIGH POINT
HW	HIGHWATER
IN.	INCH, INCHES
INV	INVERT
IRRIG	IRRIGATION
L	LENGTH
LF	LINEAR FEET
LT	LEFT
MAG	MARICOPA ASSOCIATION OF GOVERNMENTS
MH	MANHOLE
MJ	MECHANICAL JOINT
MUTE	MULTI-USE TRAIL EASEMENT
N	NORTH
NA	NOT APPLICABLE
NIC	NOT IN CONTRACT
NO.	NUMBER
OHE	OVERHEAD ELECTRIC
OPNG	OPENING
P/L	PROPERTY LINE
PAE	PUBLIC ACCESS EASEMENT
PC	POINT OF CURVATURE
PCC	POINT OF COMPOUND CURVE
PCC	PORTLAND CEMENT CONCRETE
PRC	POINT OF REVERSE CURVE
PT	POINT OF TANGENCY
PUAE	PUBLIC UTILITY & ACCESS EASEMENT
PUE	PUBLIC UTILITY EASEMENT
PVI	POINT OF VERTICAL INTERSECTION
R	RADIUS
R/W	RIGHT-OF-WAY
RGRCP	RUBBER GASKETED REINFORCED CONCRETE PIPE
RJ	RESTRAINED JOINT
RT	RIGHT
S	SEWER, SLOPE, SOUTH
S/M	SAWCUT AND MATCH
SDMH	STORM DRAIN MANHOLE
SF	SQUARE FEET
SSMH	SANITARY SEWER MANHOLE
STA	STATION
STD	STANDARD
SWK	SIDEWALK
SY	SQUARE YARD
TAN	TANGENT
TBC	TOP BACK OF CURB
T, TEL	TELEPHONE
TL	TRUE LENGTH
TYP	TYPICAL
UGE	UNDERGROUND ELECTRIC
VNAE	VEHICLE NON-ACCESS EASEMENT
Vr	VOLUME REQUIRED
Vp	VOLUME PROVIDED
W	WATER, WEST, WITH
XFMR	TRANSFORMER

LEGEND

Know what's **below.**
Call before you dig.
1-800-782-5348

REV NO.	COMMENT	DATE

CITY OF MARICOPA

(PROJECT NAME)
(DRAWING PACKAGE 1ST TITLE)
(DRAWING DESCRIPTION)

PROJ. NO.	DESIGNED	DRAWN	CHECKED	SHEET NO.
(XXXXX)	(XXX)	(XXX)	(XXX)	(XX) of (XX)

P:\Maricopa\06143 Design Standards Manual\Dwg\Cover Sheet\MAR-GN3.dwg Oct 09, 2018 12:14pm smazumdar

Know what's **below.**
Call before you dig.
1-800-782-5348

REV NO.	COMMENT	DATE

CITY OF MARICOPA

(PROJECT NAME)
(DRAWING PACKAGE 1ST TITLE)
(DRAWING DESCRIPTION)

JOB/WO NO.	DESIGNED	DRAWN	CHECKED	SHEET NO.
(XXXXX)	(XXX)	(XXX)	(XXX)	(XX) of (XX)

P:\Maricopa\06143 Design Standards Manual\Dwg\Plan and Profile\MAR-PPXX.dwg Oct 09, 2018 11:58am smazumdar

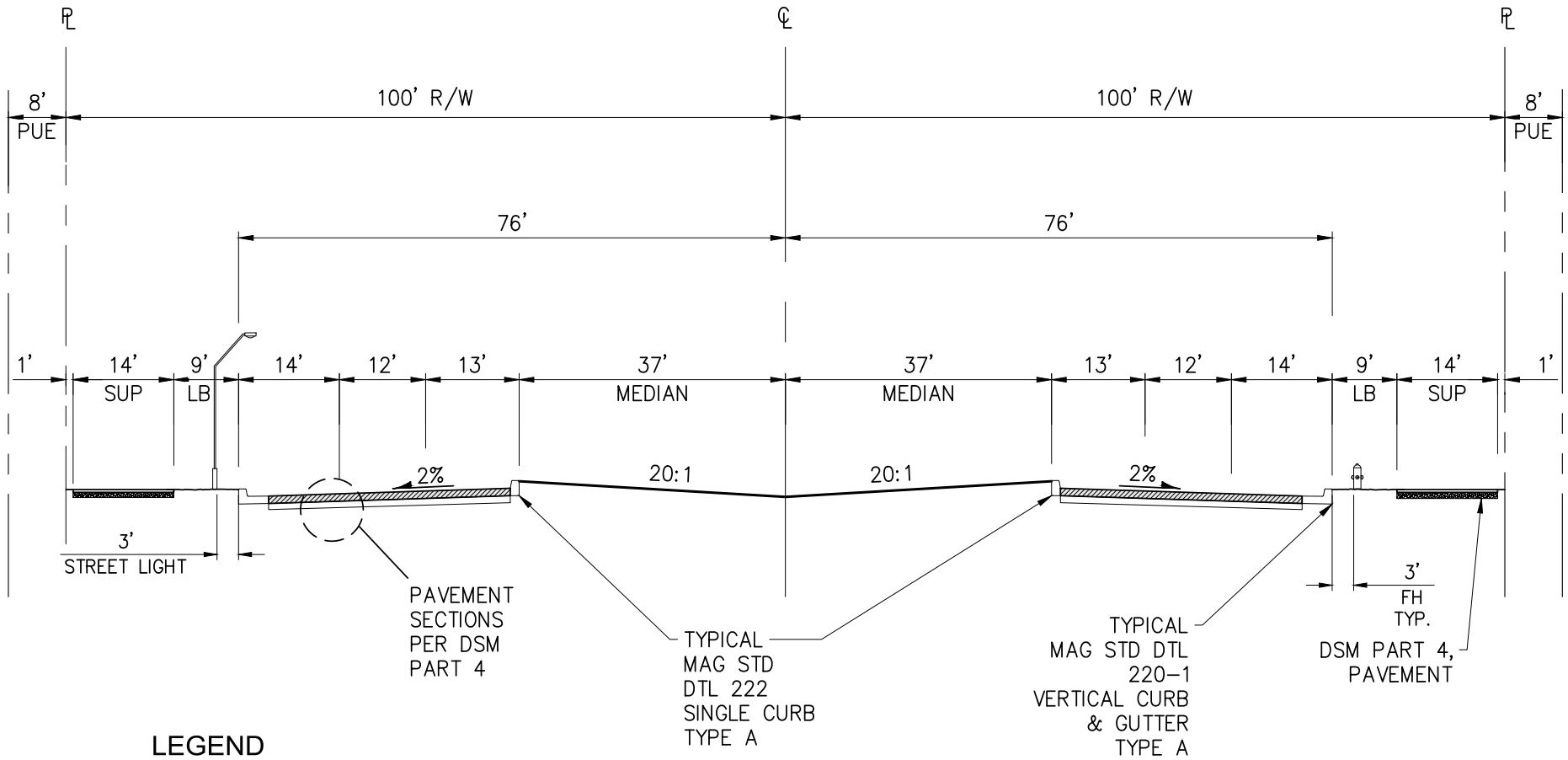

LEGEND

PUE – PUBLIC UTILITY EASEMENT
SUP – SHARED USE PATH
AC – ASPHALT CONCRETE PAVEMENT
ABC – AGGREGATE BASE COURSE

DETAIL NO.			REVISED	DETAIL NO.
MAR-201	CITY OF MARICOPA Proud History · Prosperous Future	ARIZONA PARKWAY SECTION	01-01-2020	MAR-201

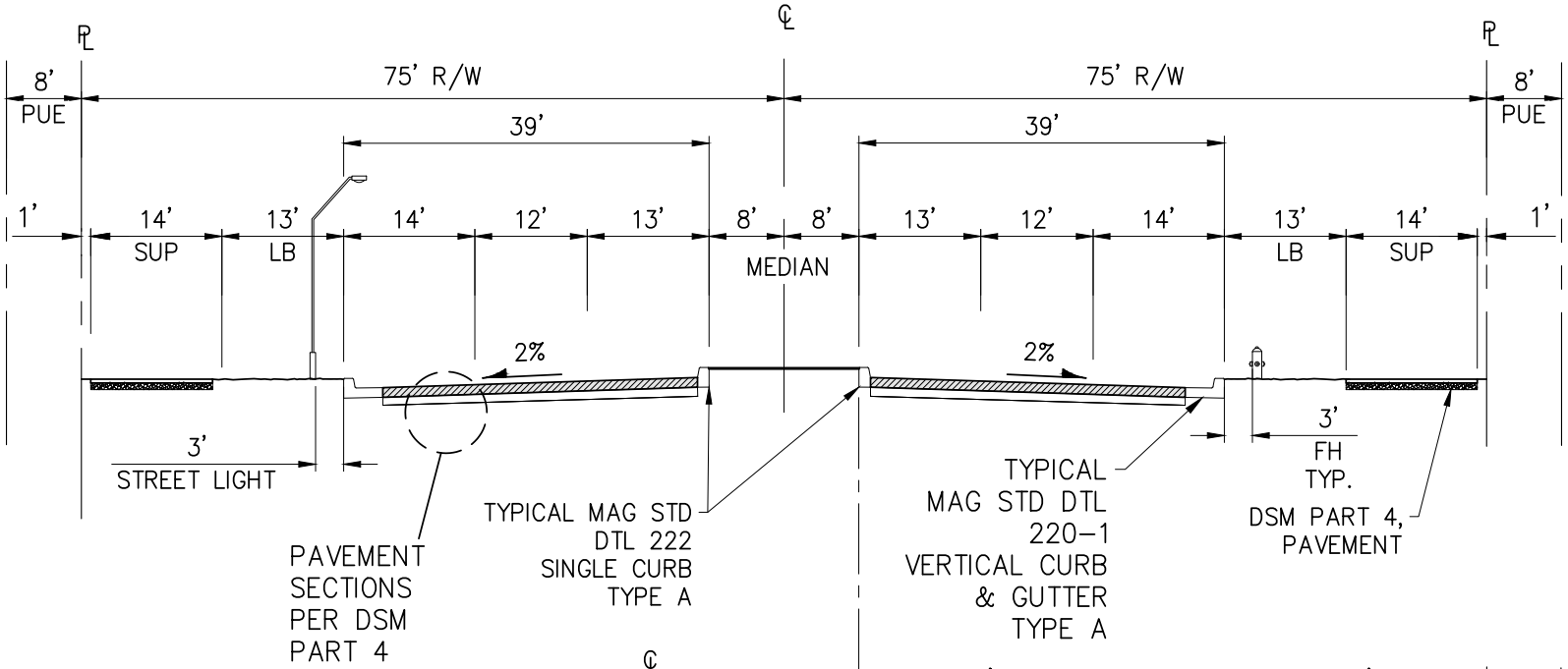

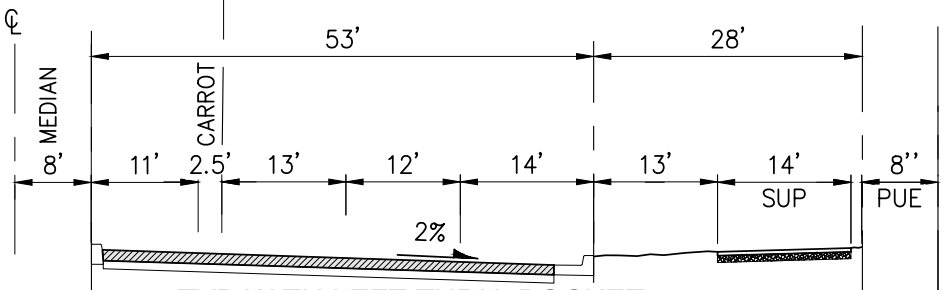

TYP WITH LEFT TURN POCKET

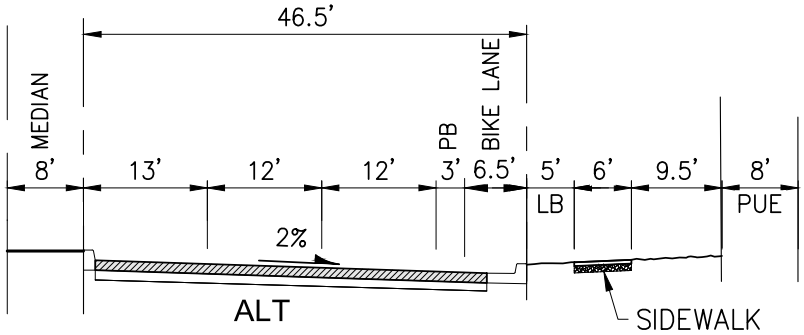

ALT

LEGEND

ALT –	ALTERNATIVE BIKE LANE
LB –	LANDSCAPE BUFFER
PB –	PAINTED BUFFER
PUE –	PUBLIC UTILITY EASEMENT
SUP –	SHARED USE PATH
AC –	ASPHALT CONCRETE PAVEMENT
ABC –	AGGREGATE BASE COURSE

DETAIL NO.			REVISED	DETAIL NO.
MAR-202-I	CITY OF MARICOPA Proud History · Prosperous Future	PRINCIPAL ARTERIAL	01-01-2020	MAR-202-I

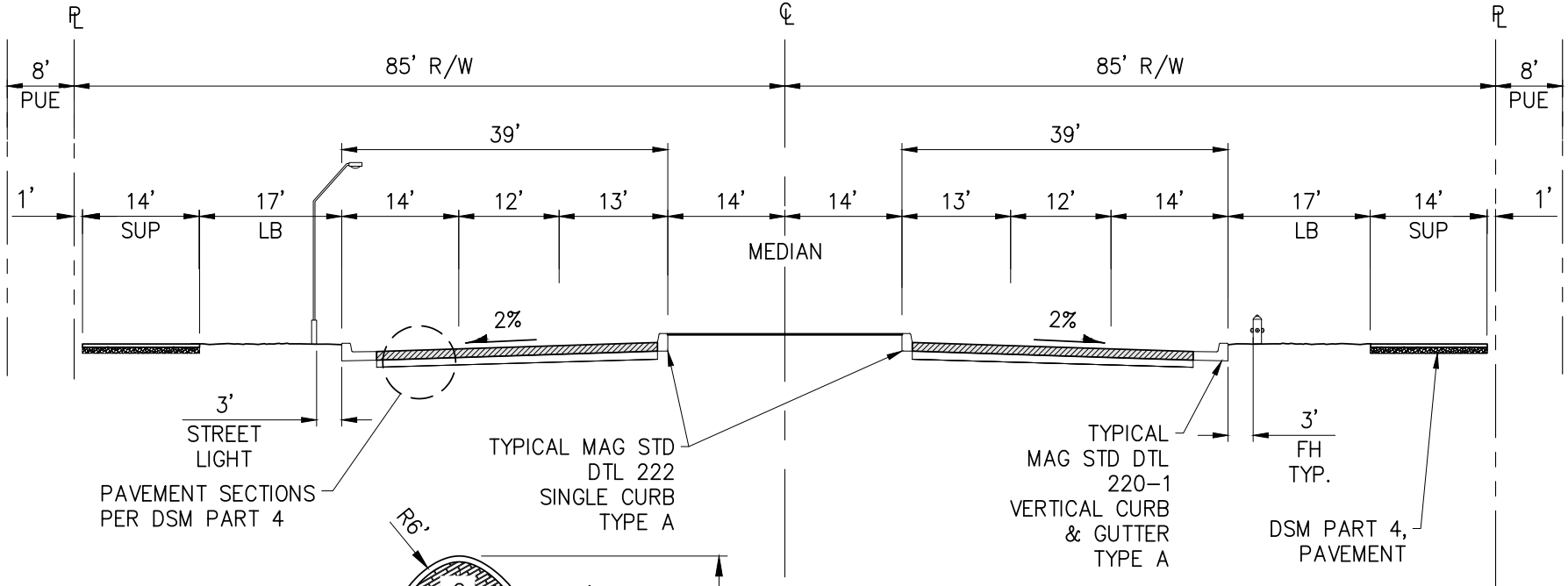

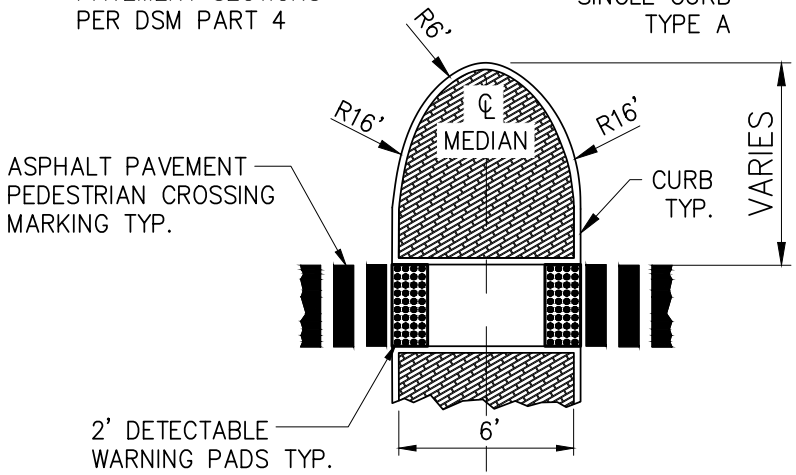

PEDESTRIAN REFUGE
AT INTERSECTION
PLAN VIEW

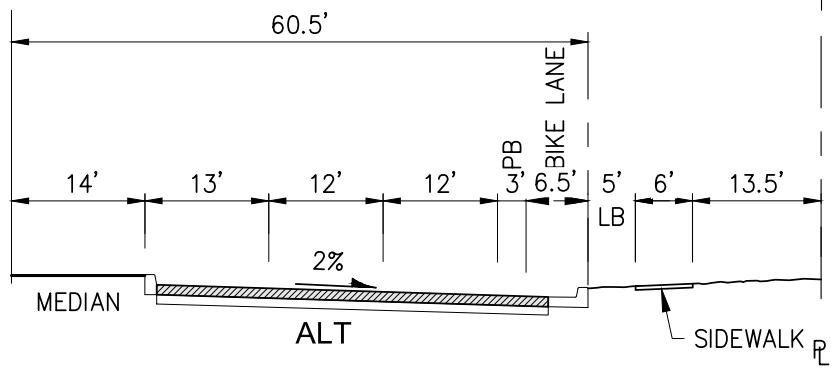

ALT

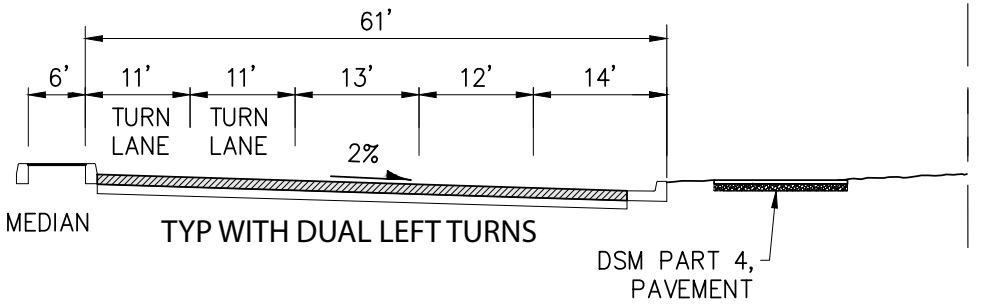

TYP WITH DUAL LEFT TURNS

LEGEND

ALT –	ALTERNATIVE BIKE LANE
LB –	LANDSCAPE BUFFER
PB –	PAINTED BUFFER
PUE –	PUBLIC UTILITY EASEMENT
SUP –	SHARED USE PATH
AC –	ASPHALT CONCRETE PAVEMENT
ABC –	AGGREGATE BASE COURSE

DETAIL NO.			REVISED	DETAIL NO.
MAR-202-II	CITY OF MARICOPA Proud History · Promising Future	PRINCIPAL ARTERIAL II	01-01-2020	MAR-202-II

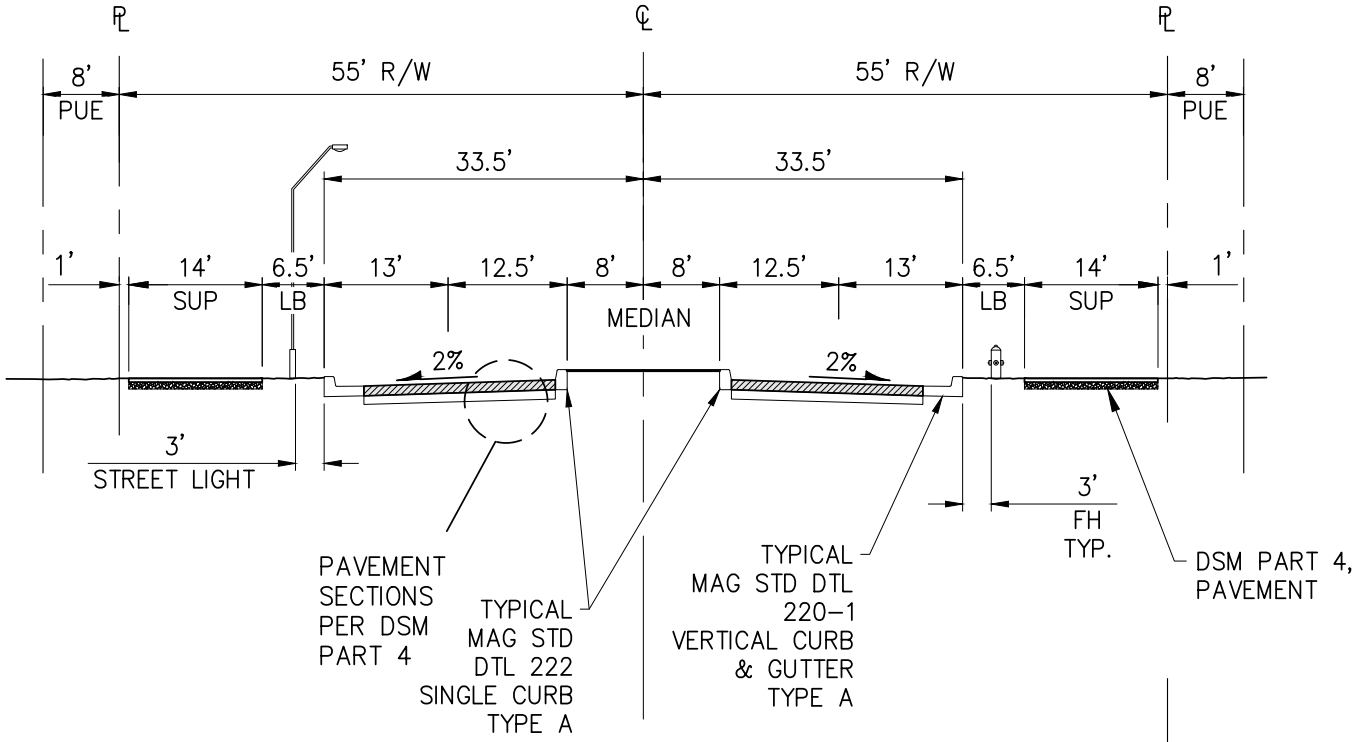

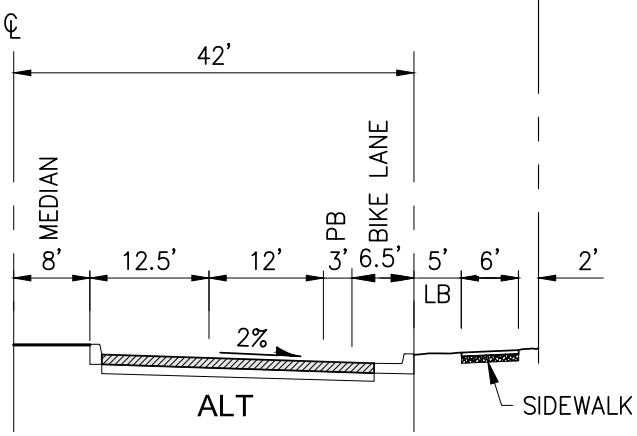

LEGEND

ALT –	ALTERNATIVE BIKE LANE
LB –	LANDSCAPE BUFFER
PB –	PAINTED BUFFER
PUE –	PUBLIC UTILITY EASEMENT
AC –	ASPHALT CONCRETE PAVEMENT
ABC –	AGGREGATE BASE COURSE

DETAIL NO.			REVISED	DETAIL NO.
MAR-203	CITY OF MARICOPA Proud History · Prosperous Future	MINOR ARTERIAL STREET	01-01-2020	MAR-203

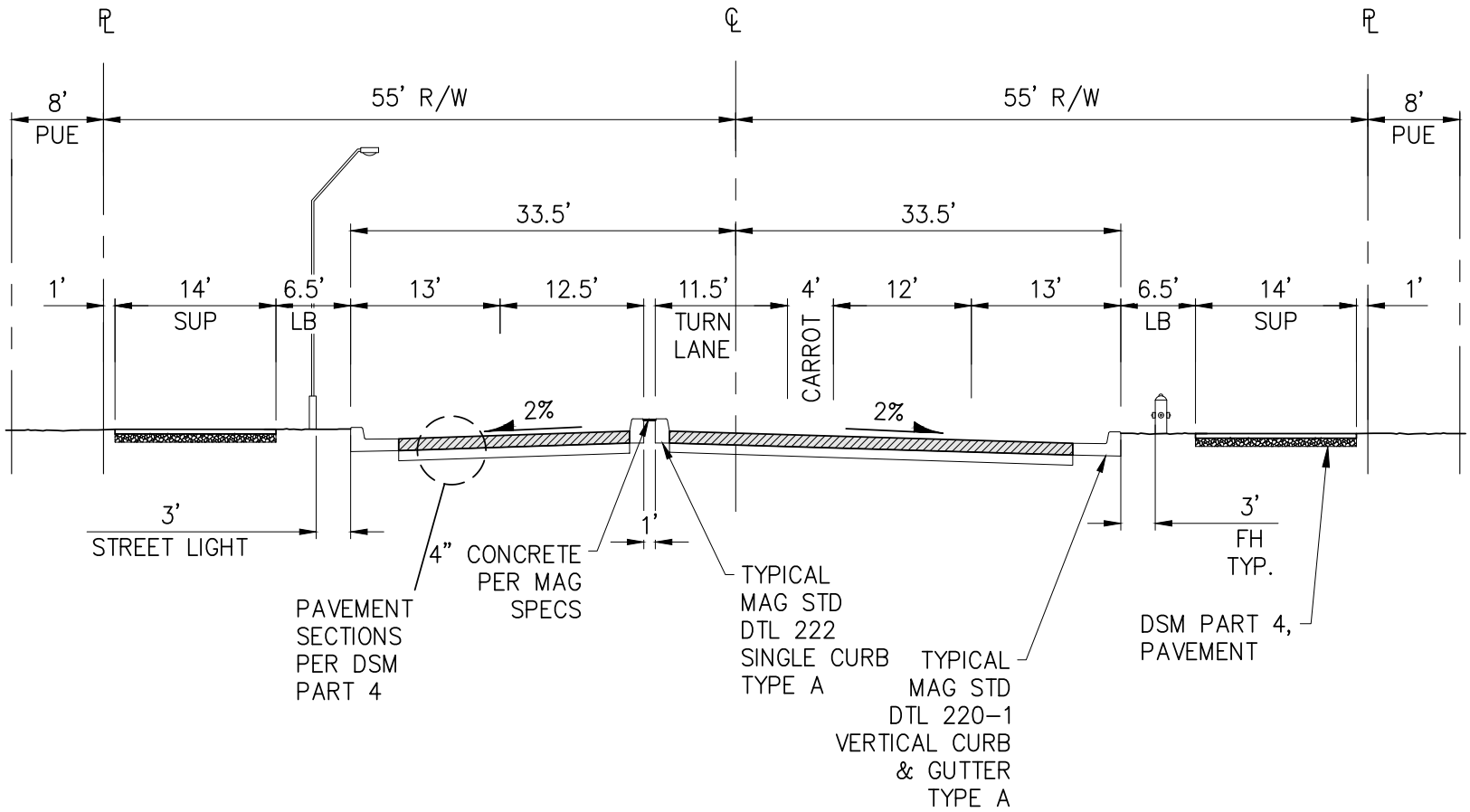

LEGEND

LB –	LANDSCAPE BUFFER
PUE –	PUBLIC UTILITY EASEMENT
SUP –	SHARED USE PATH
AC –	ASPHALT CONCRETE PAVEMENT
ABC –	AGGREGATE BASE COURSE

USE BULLNOSE TREATMENT FOR MEDIAN FOUND ON MAR-215

DETAIL NO.			REVISED	DETAIL NO.
MAR-204	CITY OF MARICOPA Proud History · Prosperous Future	MINOR ARTERIAL STREET WITH MEDIAN AT CONTROLLED INTERSECTION	01-01-2020	MAR-204

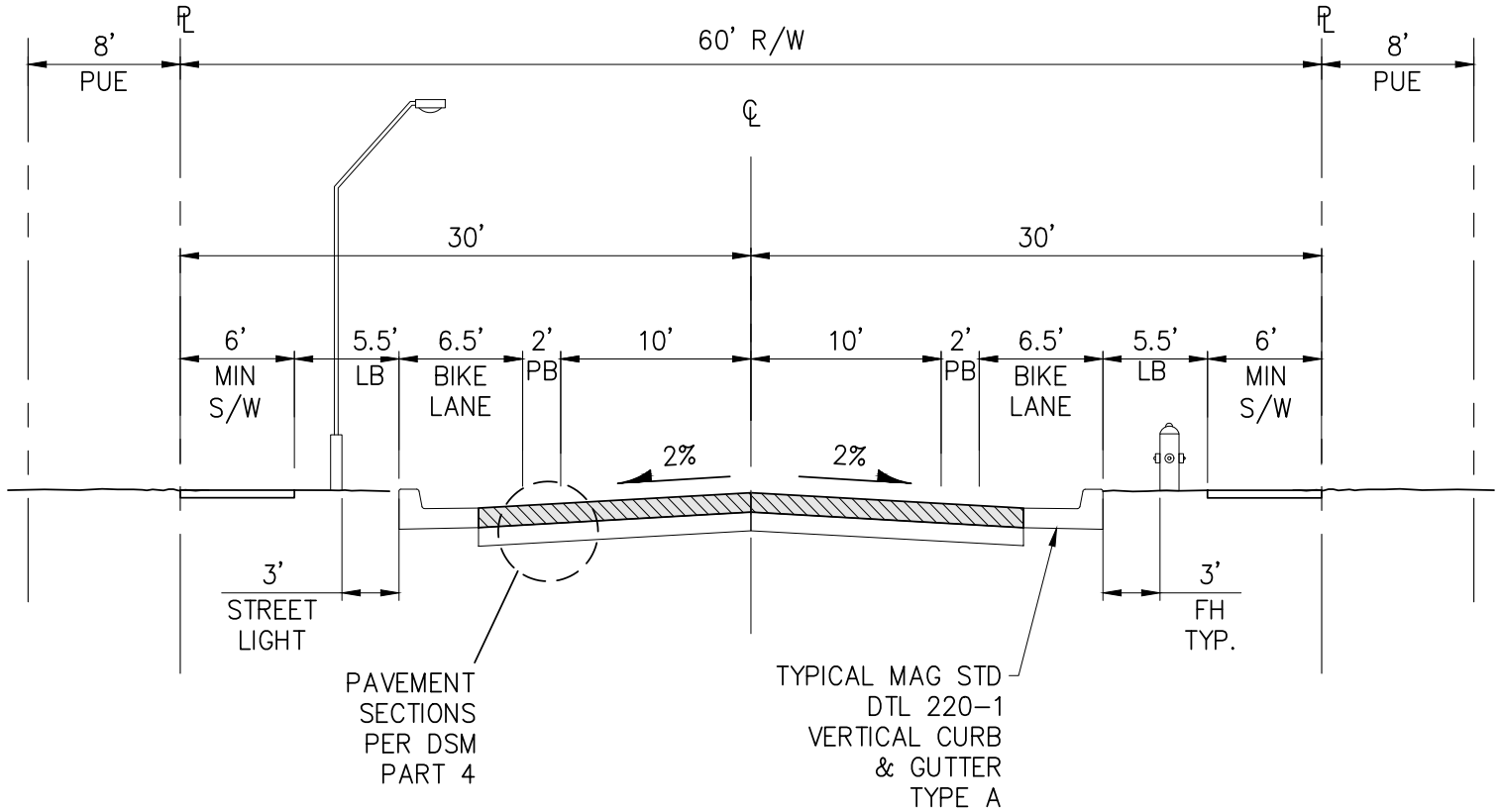

LEGEND

LB – LANDSCAPE BUFFER
PB – PAINTED BUFFER
PUE – PUBLIC UTILITY EASEMENT

DETAIL NO.			REVISED	DETAIL NO.
MAR-205-I	CITY OF MARICOPA PROUD HISTORY · PROSPEROUS FUTURE	COLLECTOR STREET - 60' ROW	01-01-2020	MAR-205-I

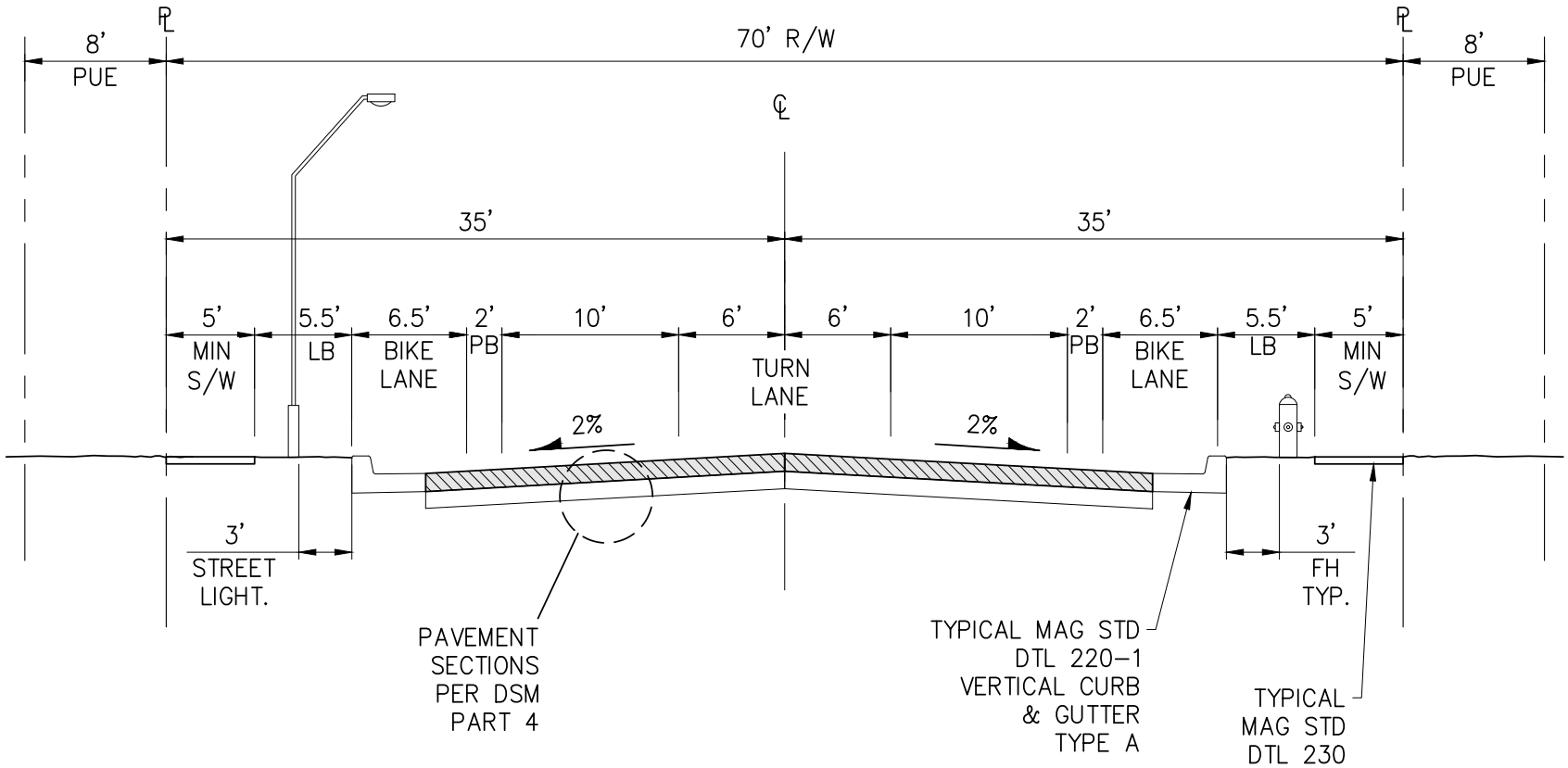

LEGEND

LB – LANDSCAPE BUFFER
PB – PAINTED BUFFER
PUE – PUBLIC UTILITY EASEMENT

DETAIL NO.			REVISED	DETAIL NO.
MAR-205-II	CITY OF MARICOPA Proud History · Promising Future	COLLECTOR STREET - 70' ROW	01-01-2020	MAR-205-II

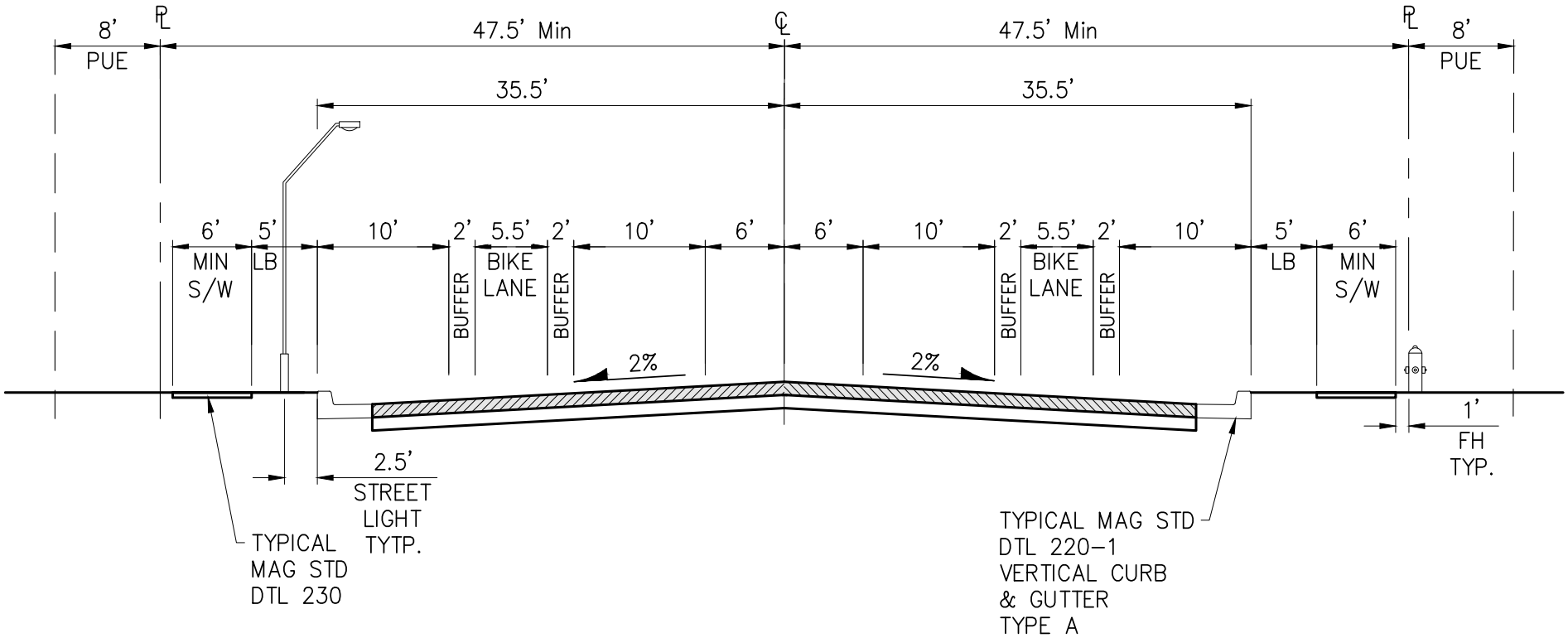

LB = LANDSCAPE BUFFER

DETAIL NO.			REVISED	DETAIL NO.
MAR-206 VC-1	CITY OF MARICOPA Proud History · Promising Future	VILLAGE COLLECTOR - 1	01-01-2020	MAR-206 VC-1

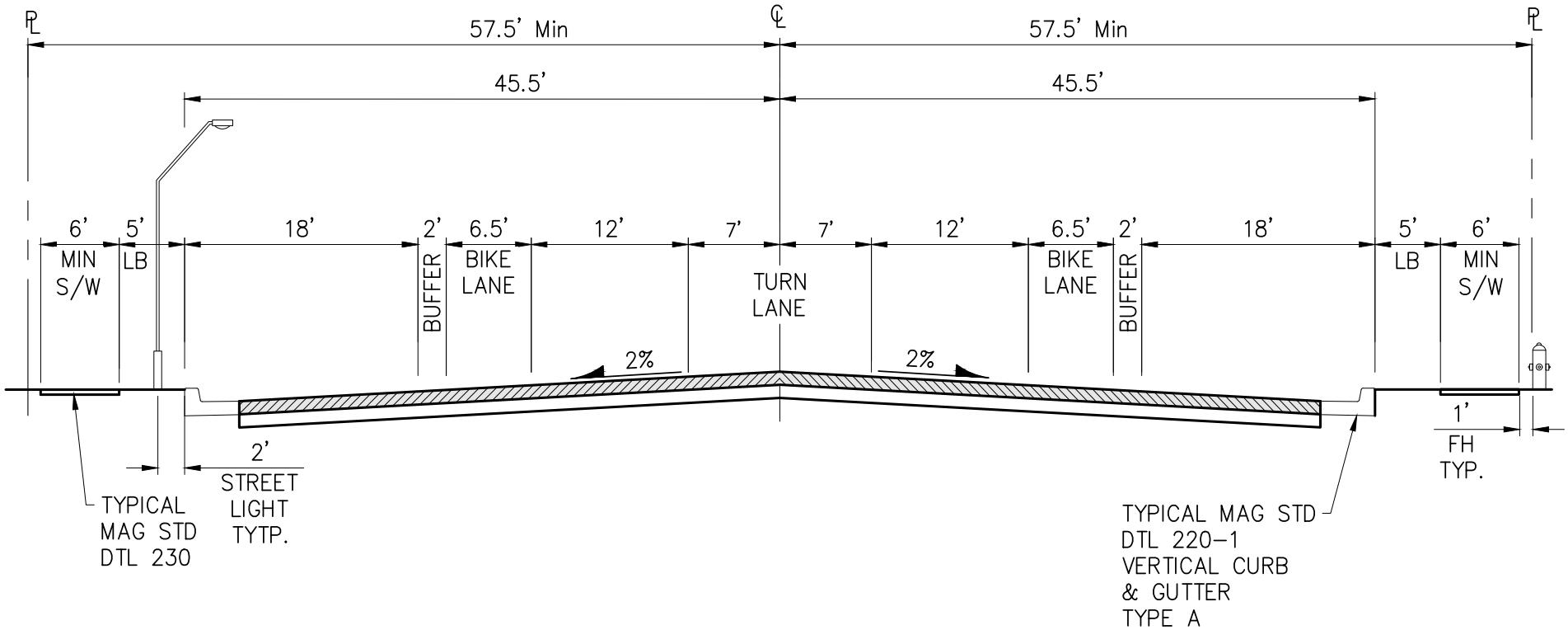

LB = LANDSCAPE BUFFER

DETAIL NO.			REVISED	DETAIL NO.
MAR-206 VC-2	CITY OF MARICOPA Proud History · Prosperous Future	VILLAGE COLLECTOR - 2	01-01-2020	MAR-206 VC-2

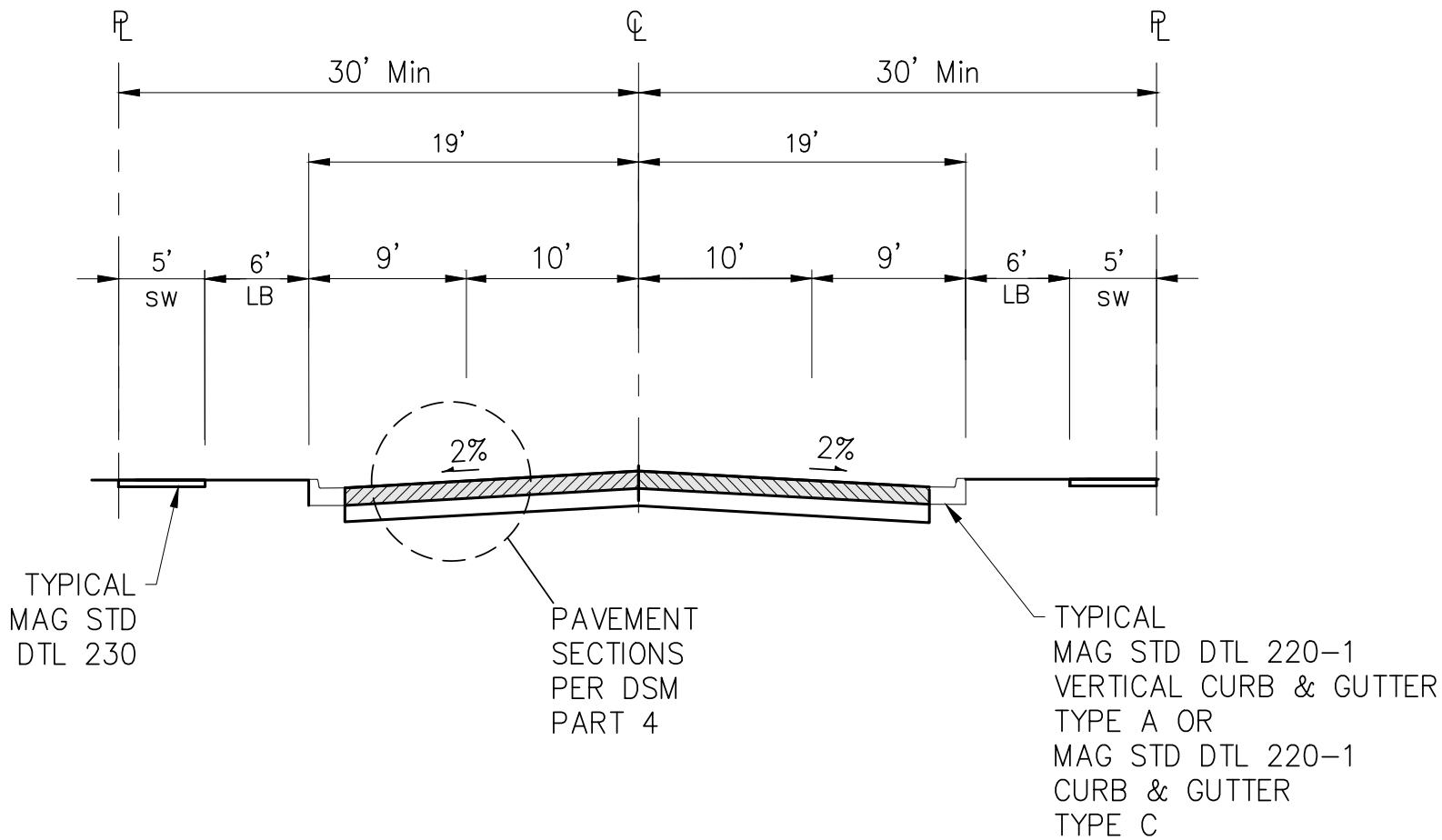

LB = LANDSCAPE BUFFER

DETAIL NO.			REVISED	DETAIL NO.
MAR-207-1	CITY OF MARICOPA Proud History · Prosperous Future	LOCAL STREET - OPTION 1	01-01-2020	MAR-207-1

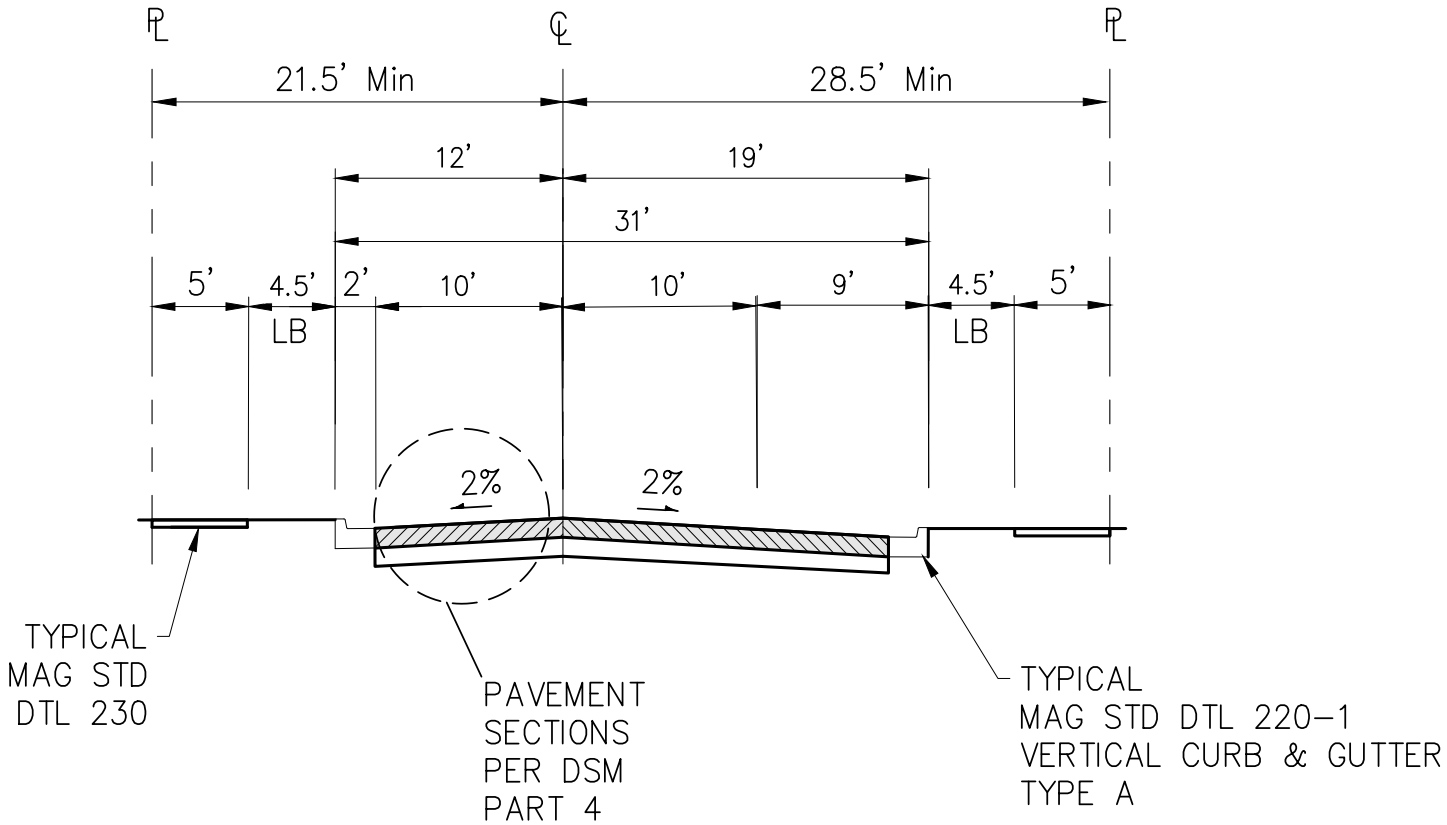

LB = LANDSCAPE BUFFER

DETAIL NO.			REVISED	DETAIL NO.
MAR-207-2	CITY OF MARICOPA Proud History · Promising Future	LOCAL STREET - OPTION - 2	01-01-2020	MAR-207-2

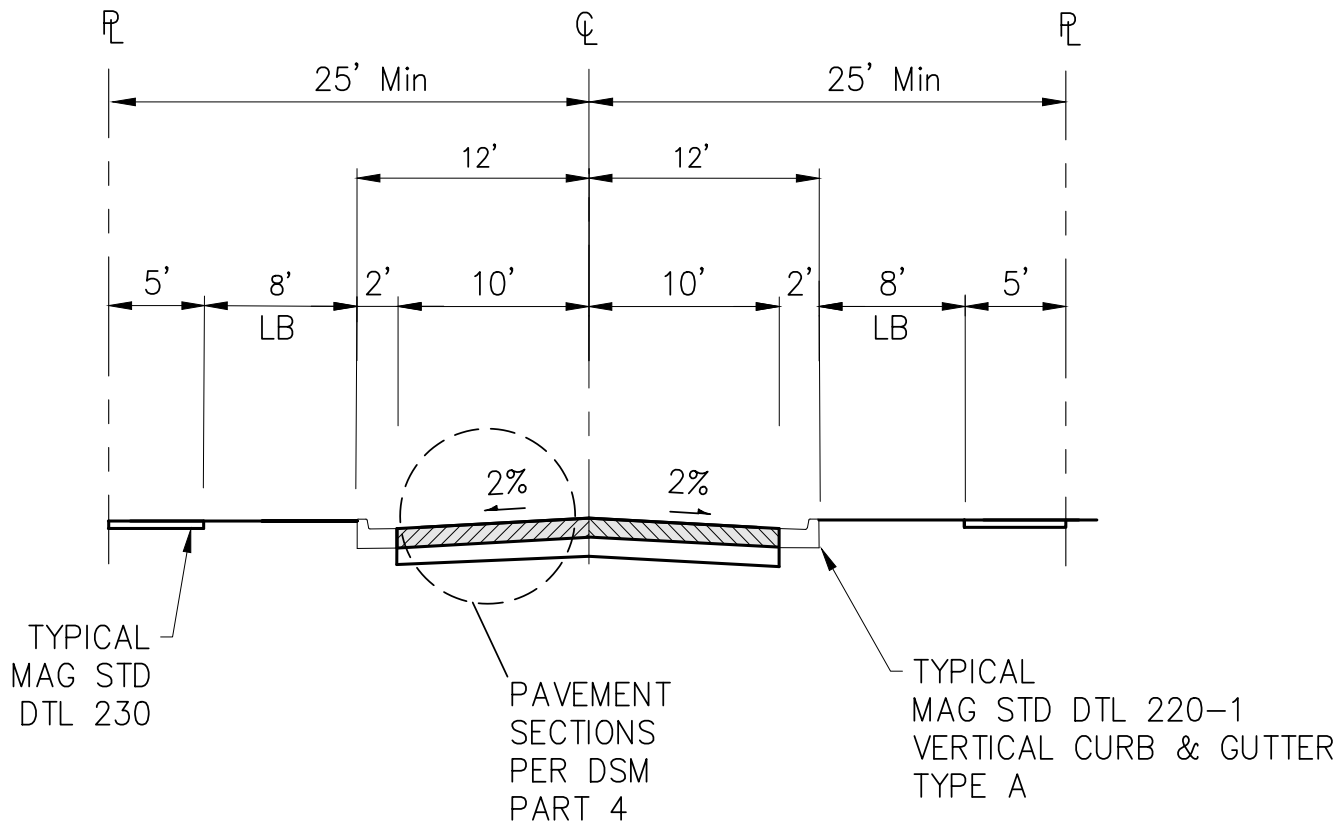

LB = LANDSCAPE BUFFER

DETAIL NO.			REVISED	DETAIL NO.
MAR-207-3	CITY OF MARICOPA Proud History · Promising Future	LOCAL STREET - OPTION - 3	01-01-2020	MAR-207-3

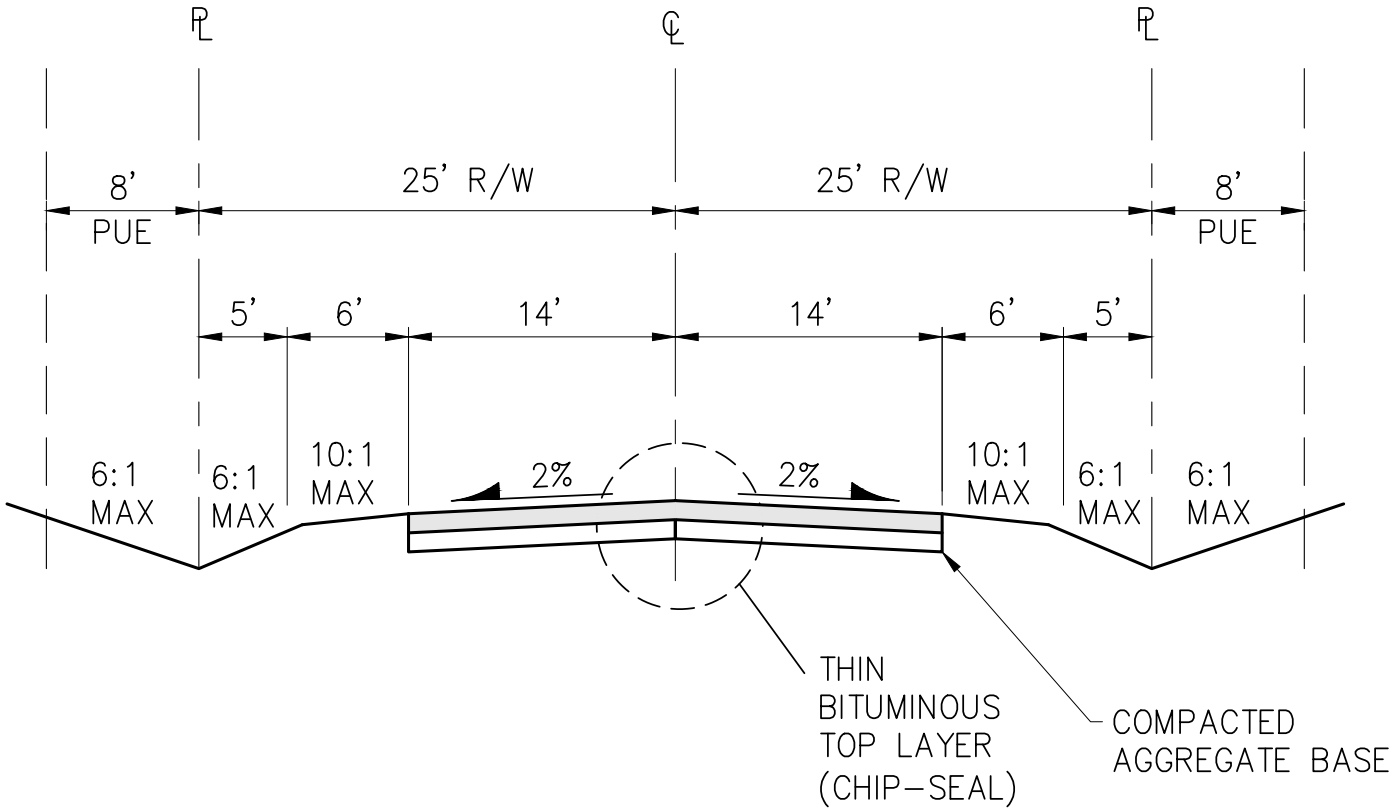

DETAIL NO.			REVISED	DETAIL NO.
MAR-208	CITY OF MARICOPA Proud History · Prosperous Future	ASPHALT ROCK DUST PALLIATIVE ROADWAY	01-01-2020	MAR-208

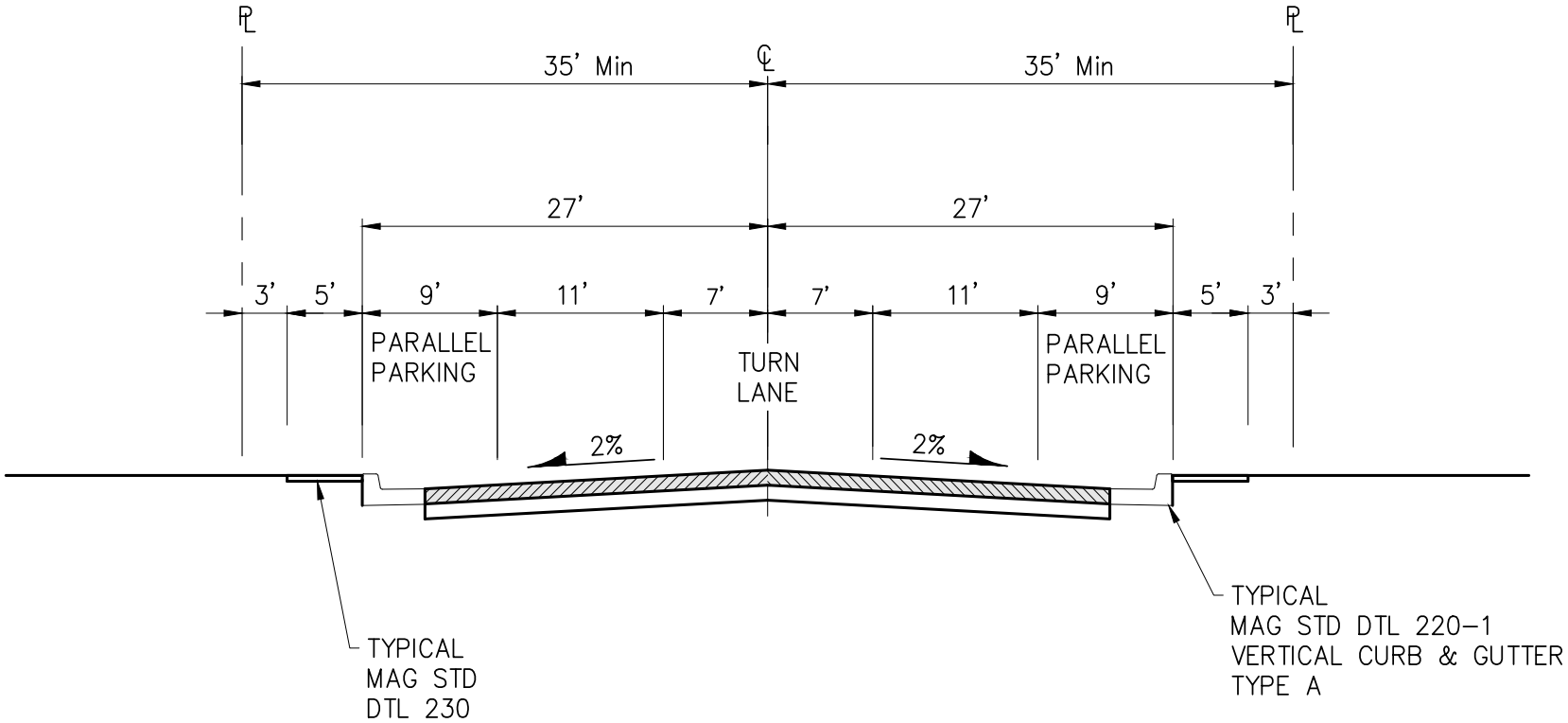

DETAIL NO.			REVISED	DETAIL NO.
MAR-209	CITY OF MARICOPA Proud History · Prosperous Future	INDUSTRIAL - COMMERCIAL LOCAL	01-01-2020	MAR-209

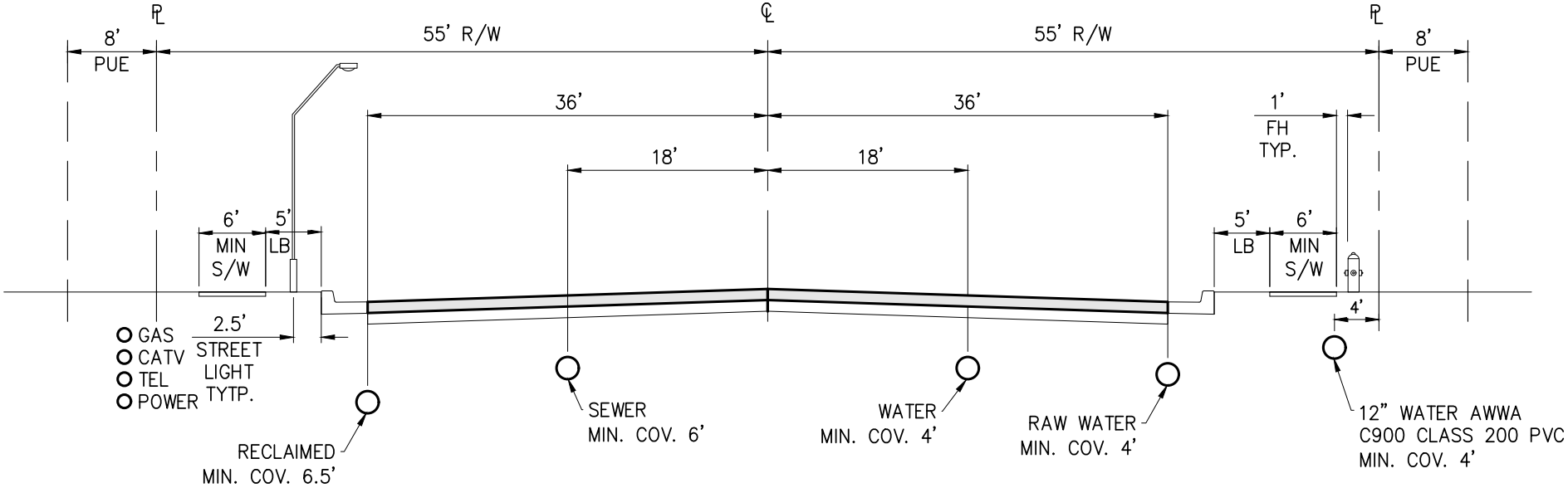

ENGINEER SHALL COORDINATE DESIGN WITH UTILITY PROVIDERS.

DRY UTILITIES SHALL CO-LOCATE IN THE SAME TRENCH.

DRY UTILITIES CAN BE LOCATED ON EITHER SIDE OF THE STREET, IN EITHER PUE BUT NOT BOTH, AND THEY MUST BE SEPARATED FROM WET UTILITIES.

LB = LANDSCAPE BUFFER

DETAIL NO.			REVISED	DETAIL NO.
MAR-210	CITY OF MARICOPA Proud History · Prosperous Future	MINOR ARTERIAL STREET WITH TURN LANE STANDARD UTILITY LOCATIONS	01-01-2020	MAR-210

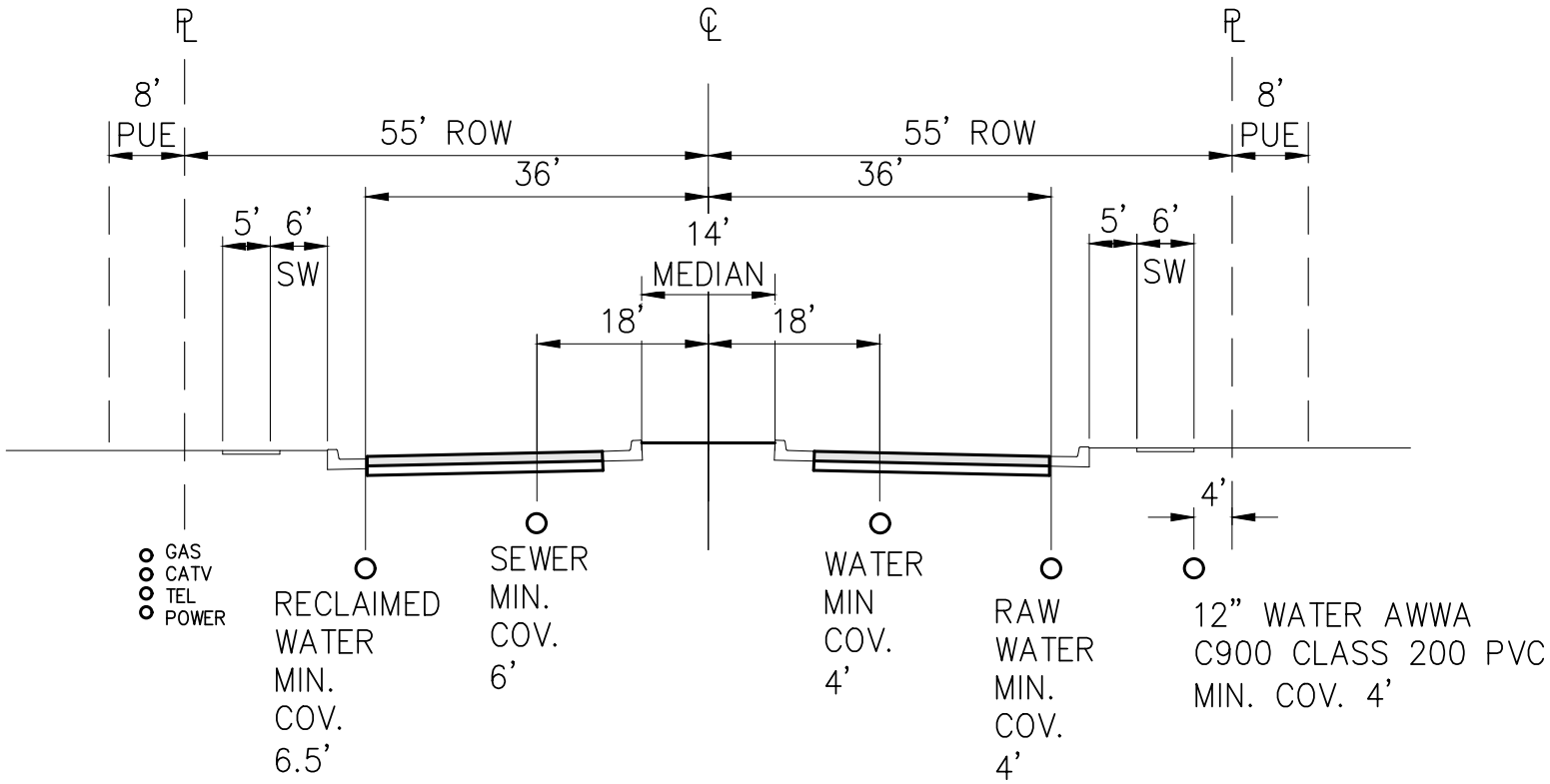

ENGINEER SHALL COORDINATE DESIGN WITH UTILITY PROVIDERS.

DRY UTILITIES SHALL CO-LOCATE IN THE SAME TRENCH.

DRY UTILITIES CAN BE LOCATED ON EITHER SIDE OF THE STREET, IN EITHER PUE BUT NOT BOTH, AND THEY MUST BE SEPARATED FROM WET UTILITIES.

DETAIL NO.			REVISED	DETAIL NO.
MAR-211	CITY OF MARICOPA Proud History · Prosperous Future	MINOR ARTERIAL STREET WITH RAISED MEDIAN	01-01-2020	MAR-211

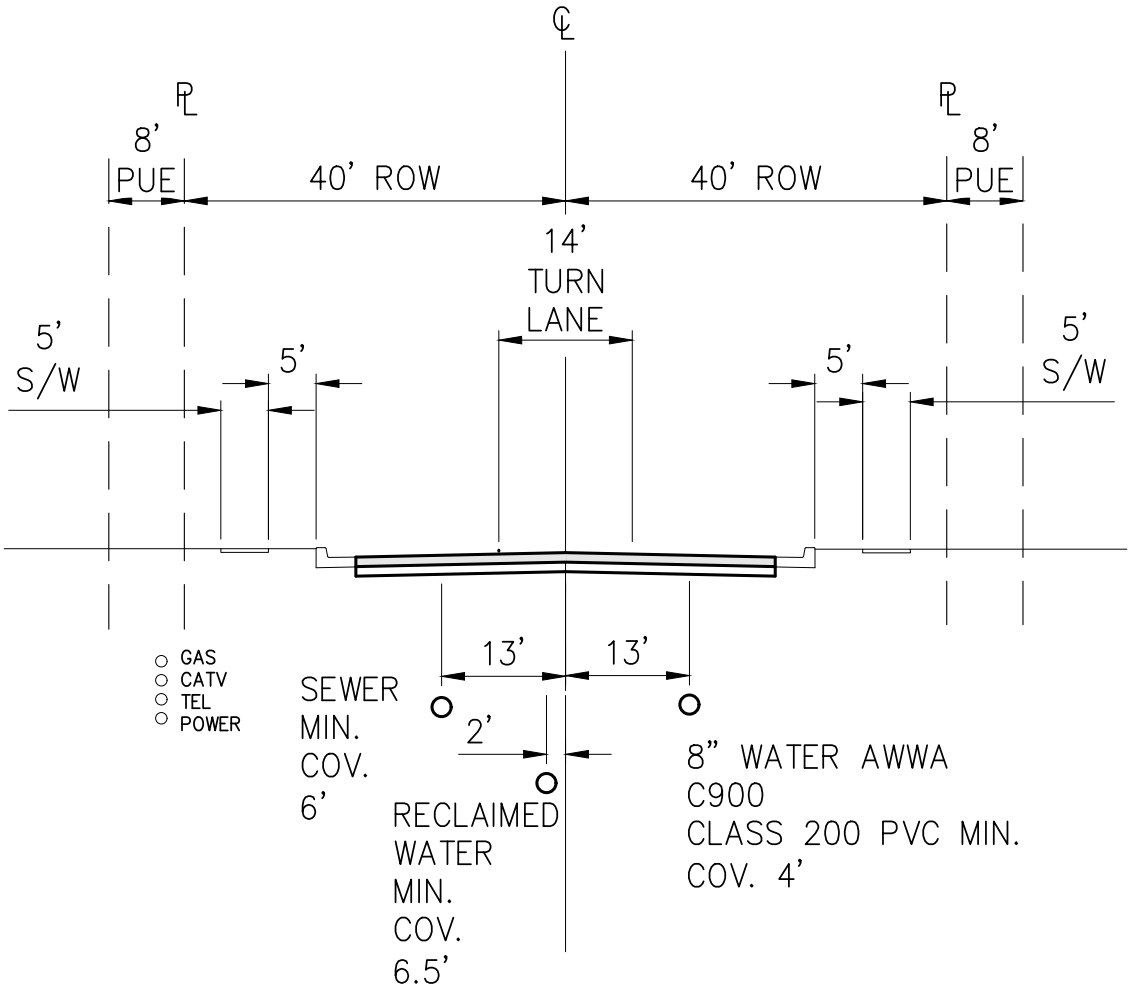

ENGINEER SHALL COORDINATE DESIGN WITH UTILITY PROVIDERS.

DRY UTILITIES SHALL CO-LOCATE IN THE SAME TRENCH.

DRY UTILITIES CAN BE LOCATED ON EITHER SIDE OF THE STREET, IN EITHER PUE BUT NOT BOTH, AND THEY MUST BE SEPARATED FROM WET UTILITIES.

DETAIL NO.			REVISED	DETAIL NO.
MAR-212	CITY OF MARICOPA Proud History · Promising Future	COLLECTOR STREET STANDARD UTILITY LOCATIONS	01-01-2020	MAR-212

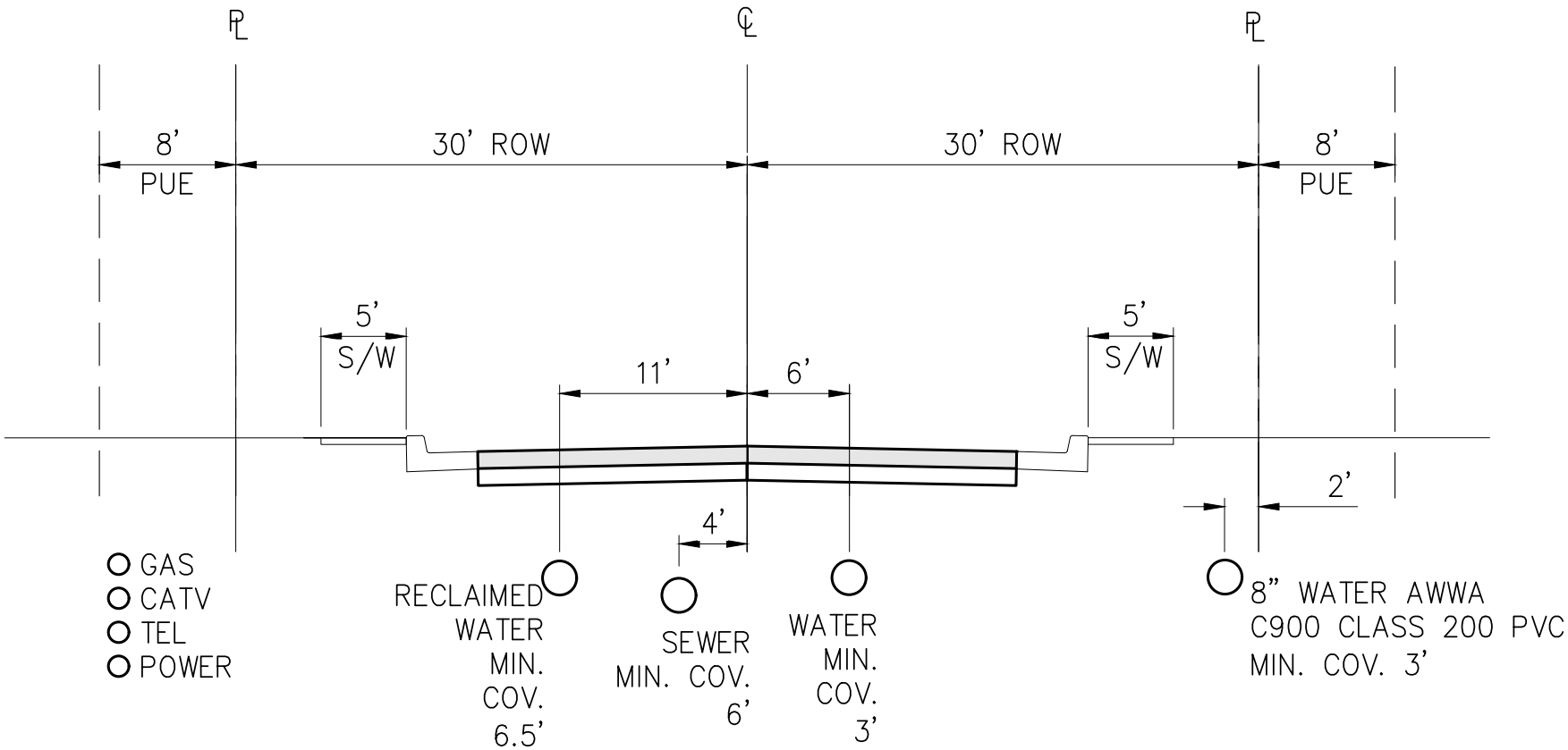

ENGINEER SHALL COORDINATE DESIGN WITH UTILITY PROVIDERS

DRY UTILITIES SHALL CO-LOCATE IN THE SAME TRENCH

DRY UTILITIES CAN BE LOCATED ON EITHER SIDE OF THE STREET, IN EITHER PUE BUT NOT BOTH, AND THEY MUST BE SEPARATED FROM WET UTILITIES

DETAIL NO.			REVISED	DETAIL NO.
MAR-213	CITY OF MARICOPA Proud History · Prosperous Future	SUPER LOCAL STREET STANDARD UTILITY LOCATIONS	01-01-2020	MAR-213

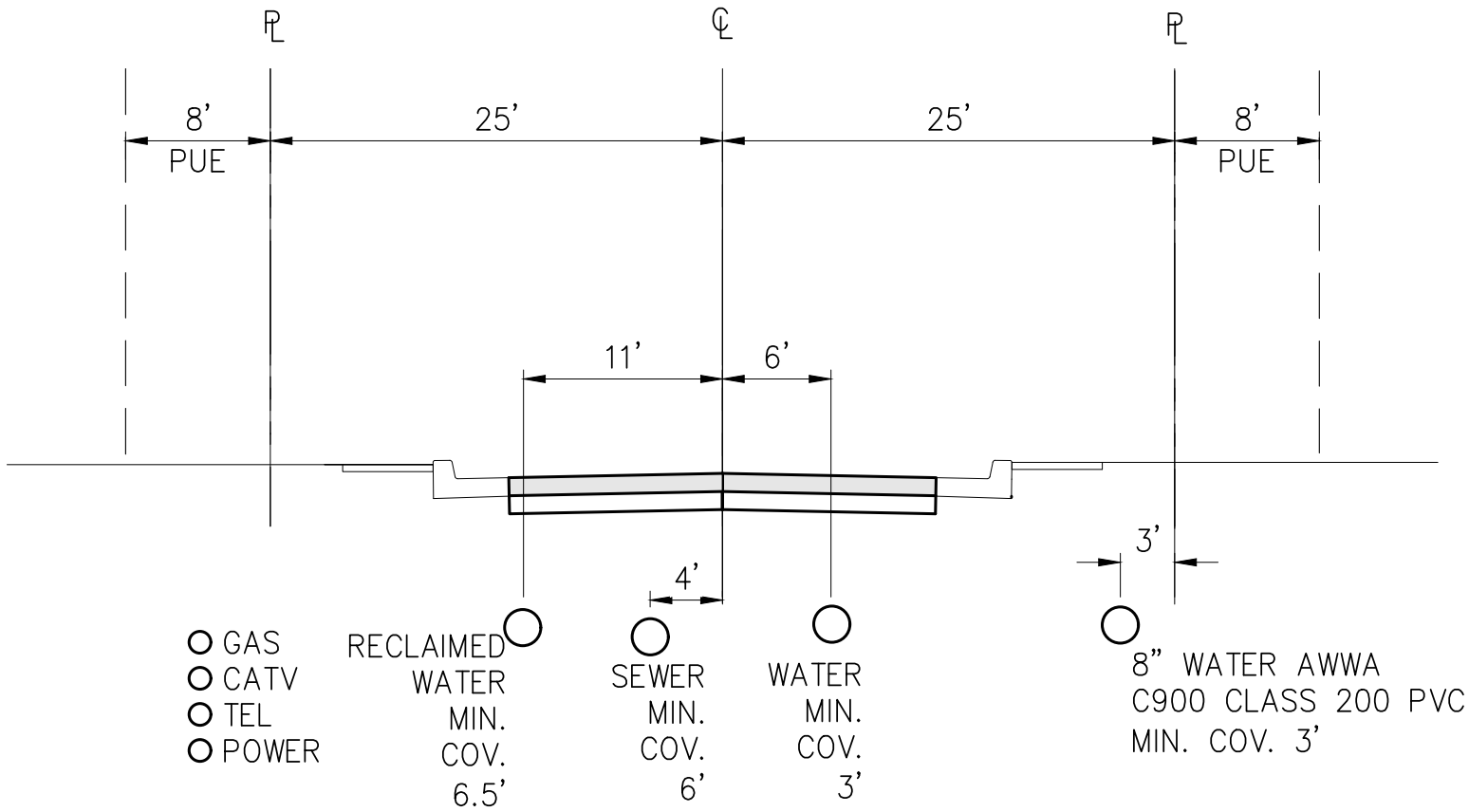

ENGINEER SHALL COORDINATE DESIGN WITH UTILITY PROVIDERS

DRY UTILITIES SHALL CO-LOCATE IN THE SAME TRENCH

DRY UTILITIES CAN BE LOCATED ON EITHER SIDE OF THE STREET, IN EITHER PUE BUT NOT BOTH, AND THEY MUST BE SEPARATED FROM WET UTILITIES

DETAIL NO.			REVISED	DETAIL NO.
MAR-214	CITY OF MARICOPA Proud History · Prosperous Future	LOCAL STREET STANDARD UTILITY LOCATIONS	01-01-2020	MAR-214

CURVE	DELTA	RADIUS	ARC LENGTH
C1	13°14'08"	211.33'	50.48'
C2	13°14'08"	211.33'	50.48'
C3	180°00'00"	1.00'	3.14'

ALL RADII AND DIMENSIONS ARE TO BACK OF CURB

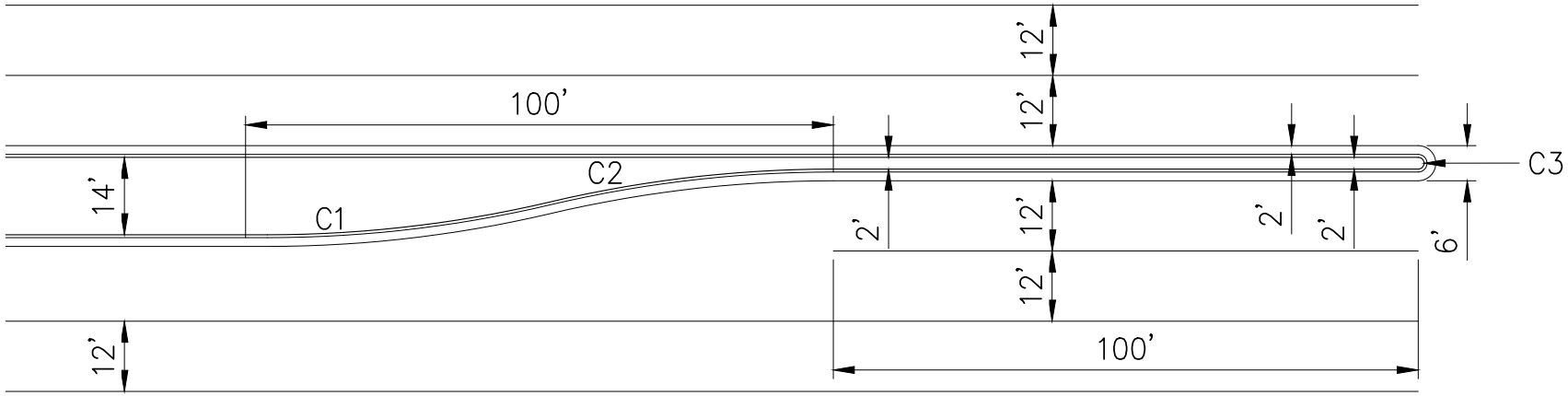

DETAIL NO.			REVISED	DETAIL NO.
MAR-215	CITY OF MARICOPA Proud History · Prosperous Future	STANDARD LEFT TURN LANE	01-01-2020	MAR-215

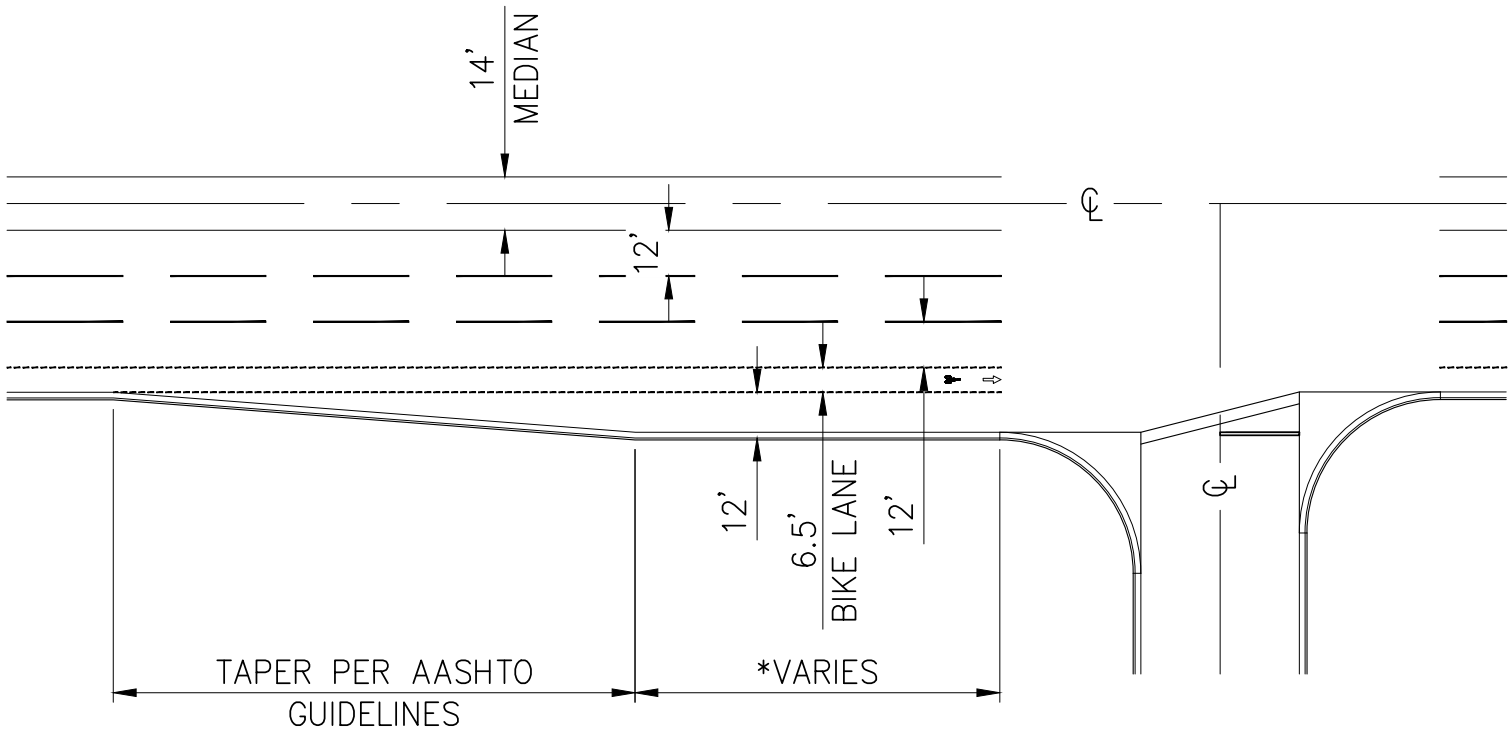

* VARIES PER TRAFFIC IMPACT ANALYSIS

DETAIL NO.			REVISED	DETAIL NO.
MAR-216	CITY OF MARICOPA Proud History · Prosperous Future	STANDARD RIGHT TURN LANE	01-01-2020	MAR-216

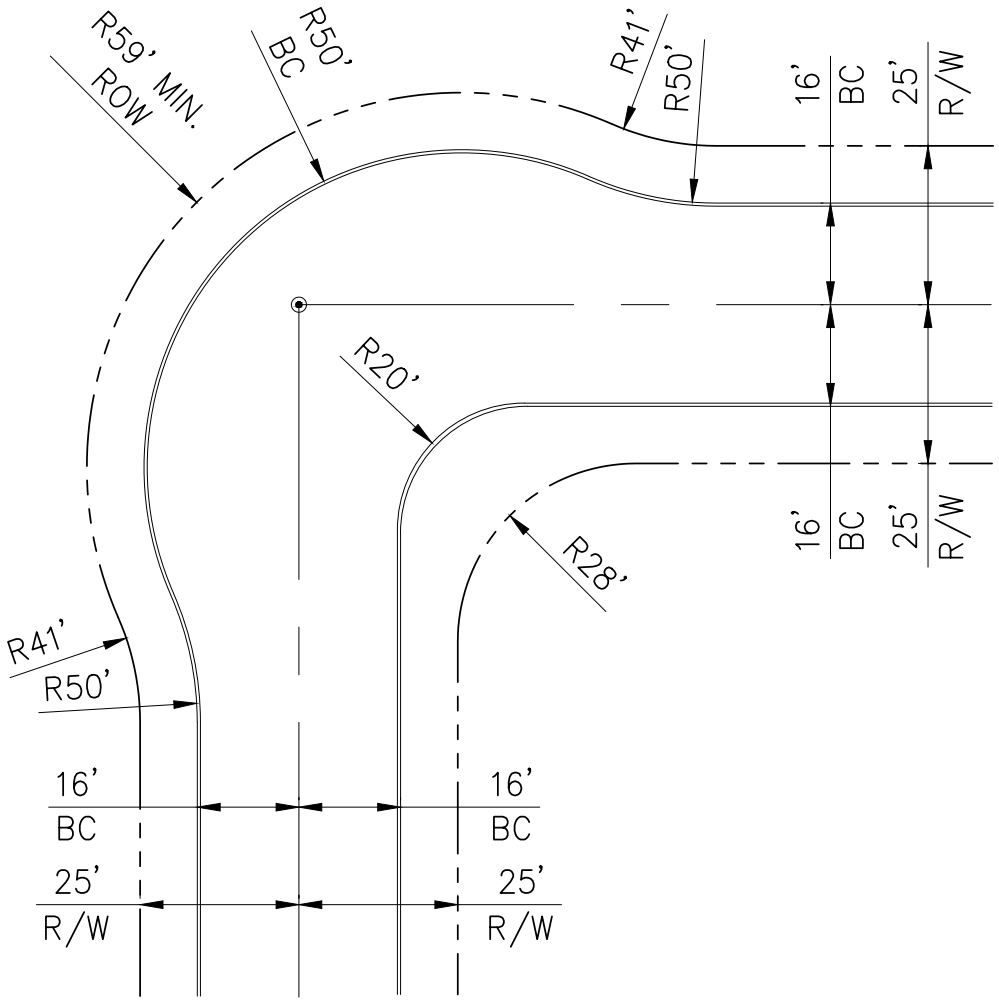

DETAIL NO.			REVISED	DETAIL NO.
MAR-217	CITY OF MARICOPA Proud History · Prosperous Future	STANDARD KNUCKLE	01-01-2020	MAR-217

WHEN TANGENT LINES DEFLECT MORE THAN 10° AND LESS THAN 90° THEY SHALL BE CONNECTED BY A CURVE WITH MINIMUM RADIUS EQUAL TO 200 FEET FOR LOCAL AND COLLECTOR STREETS

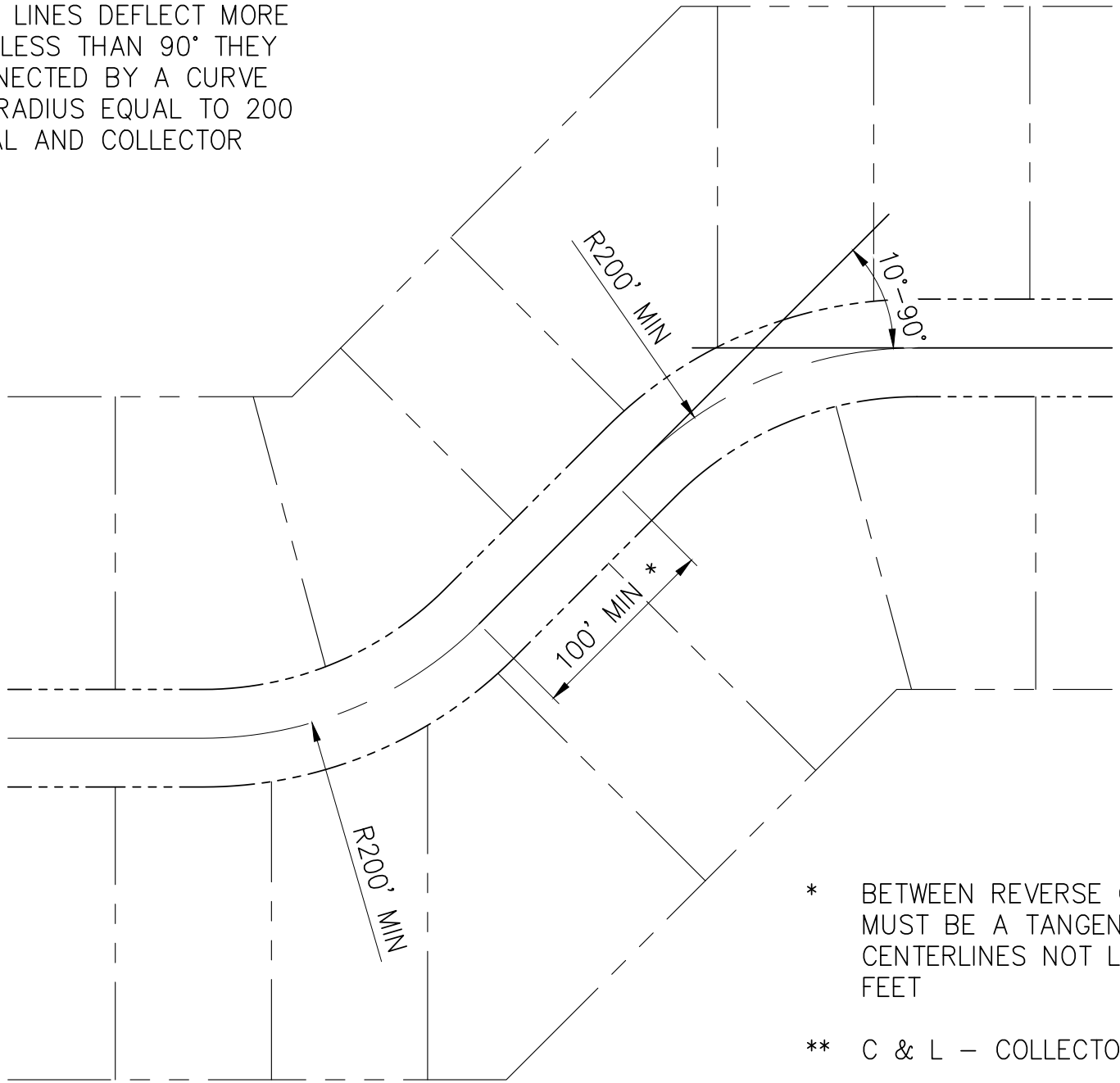

* BETWEEN REVERSE CURVES THERE MUST BE A TANGENT SECTION OF CENTERLINES NOT LESS THAN 100 FEET

** C & L – COLLECTOR & LOCAL

DETAIL NO.			REVISED	DETAIL NO.
MAR-218	CITY OF MARICOPA Proud History · Prosperous Future	CENTERLINE DEFLECTION AND REVERSE CURVES FOR C & L STREETS**	01-01-2020	MAR-218

INTERSECTION OFFSET MUST BE
GREATER THAN OR EQUAL TO 135 FEET

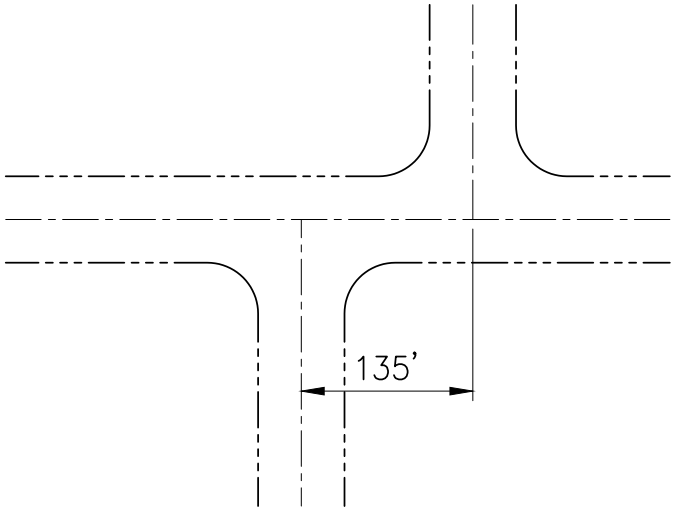

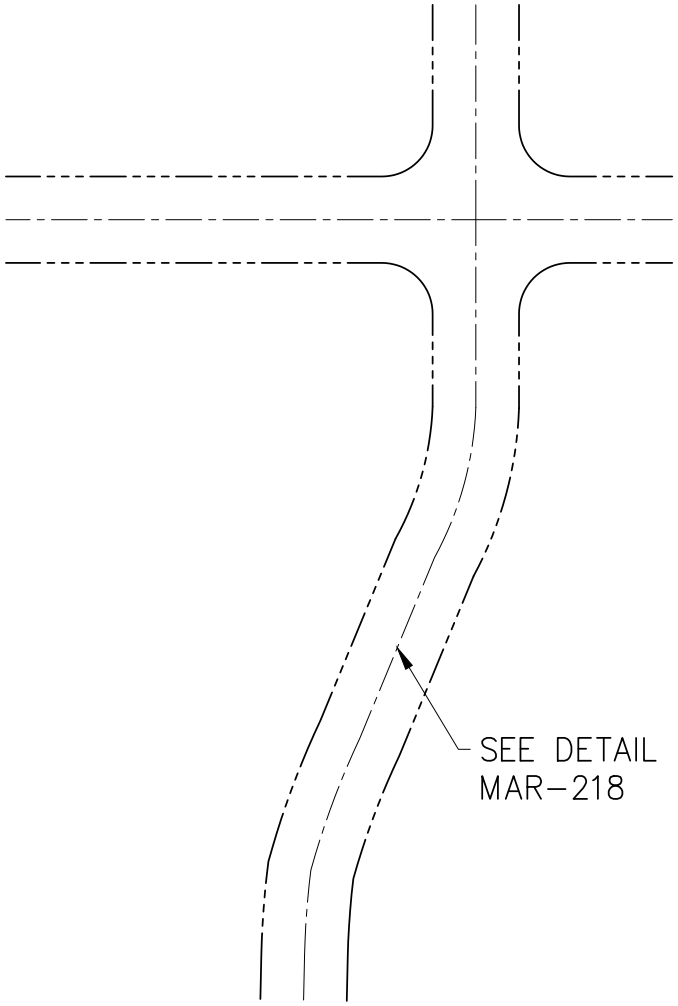

PREFERRED

DETAIL NO.			REVISED	DETAIL NO.
MAR-219	CITY OF MARICOPA PROUD HISTORY · PROSPEROUS FUTURE	STREET JOGS FOR LOCAL STREETS	01-01-2020	MAR-219

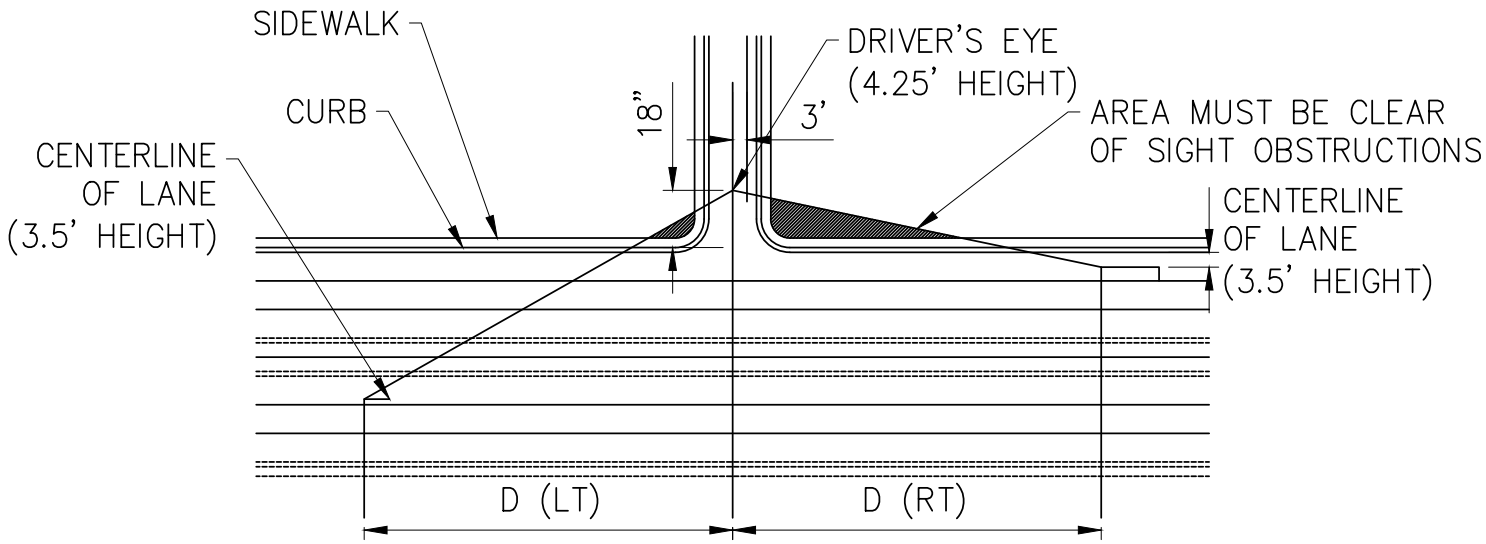

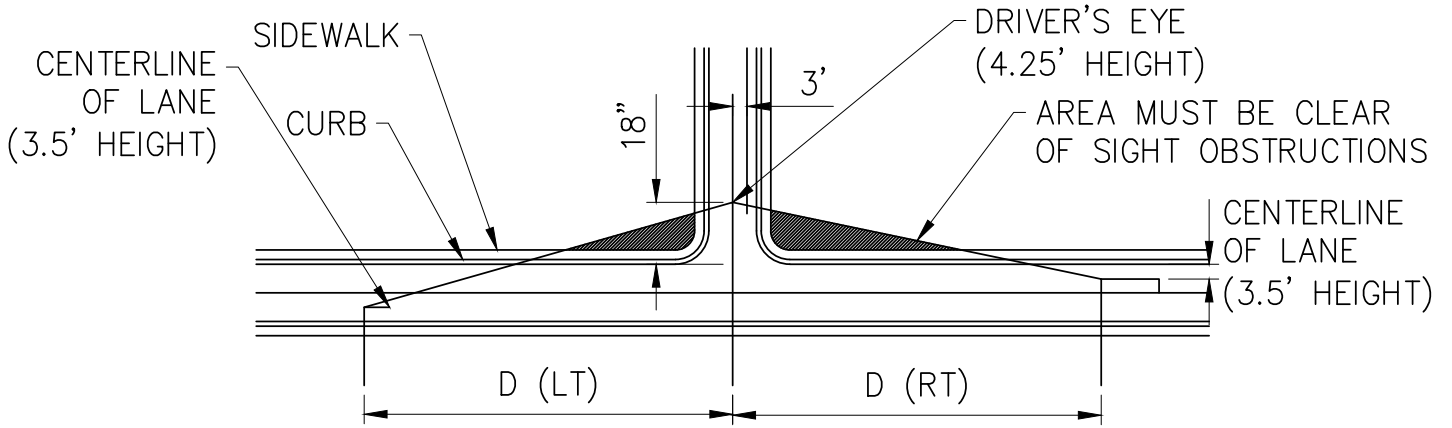

TRAFFIC SPEED (MPH)	20	25	30	35	40	45	50	55	60
D (LT)	225	280	335	390	445	500	555	610	665
D (RT)	195	240	290	335	385	430	480	530	575

PER AASHTO – 2001

DETAIL NO.			REVISED	DETAIL NO.
MAR-220	CITY OF MARICOPA Proud History · Prosperous Future	SIGHT DISTANCE REQUIREMENTS	01-01-2020	MAR-220

	Local 1	Local 2	Local 3
Dimensions	(ft)	(ft)	(ft)
H/S R/W	30 M	21.5 M/28.5 M	25 M
H/S B/C	19	13/20	12
R1	24	24	24
R2	50	50	50
R3	61	59.5	63
R5 (R/W)	19	20.5	17
R6 (B/C)	30	30	30

M = Minimum
H/S = Half Street
R/W = ROW
B/C = Back of Curb

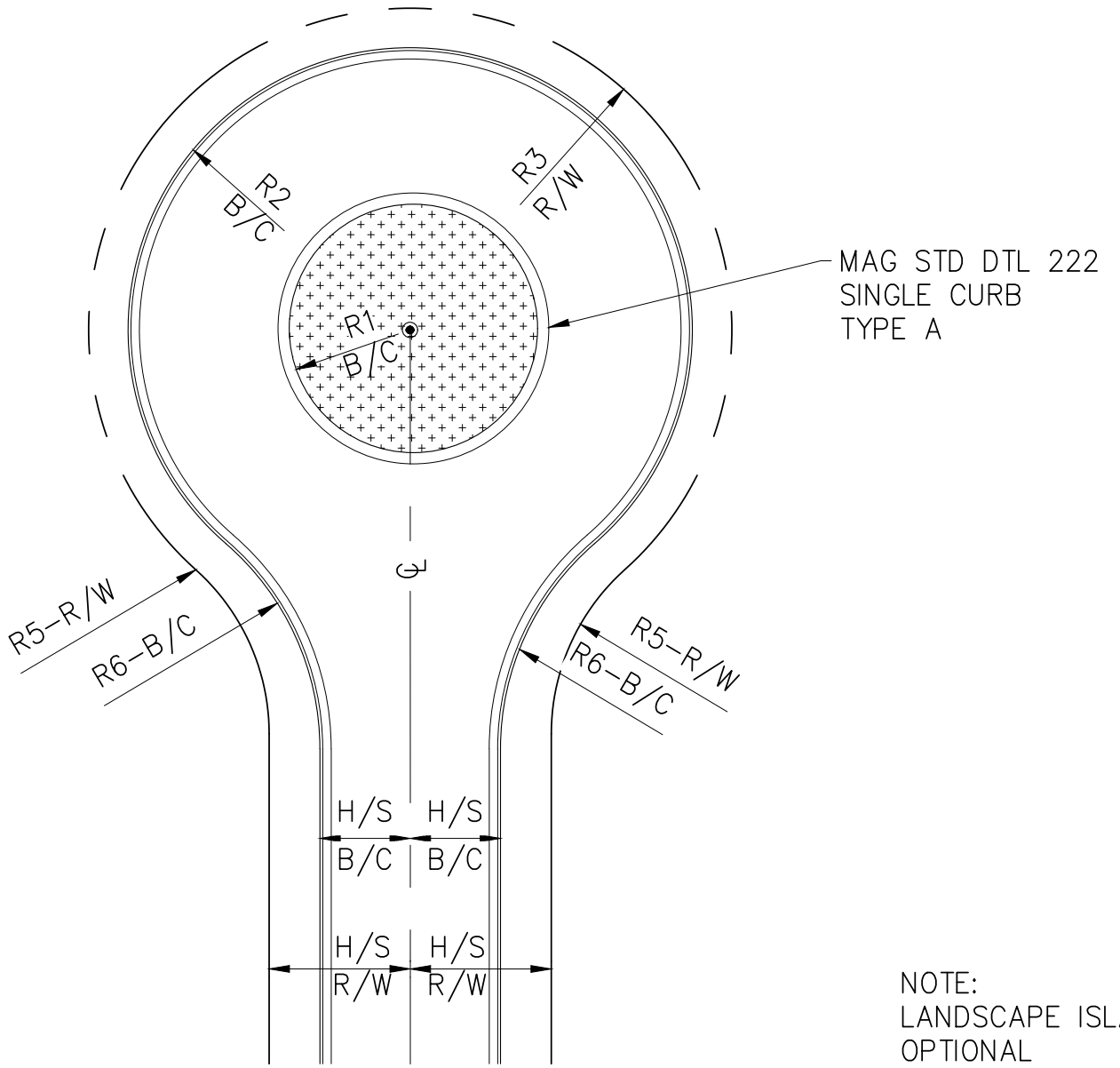

PLANTER

VERTICAL CURB & GUTTER

SINGLE CURB

NOTE:
LANDSCAPE ISLAND IS OPTIONAL

DETAIL NO.			REVISED	DETAIL NO.
MAR-221	CITY OF MARICOPA Proud History · Promising Future	STANDARD CUL-DE-SAC	01–01–2020	MAR-221

	Local 1	Local 2	Local 3
Dimensions	(ft)	(ft)	(ft)
H/S R/W	25	21.5/28.5	25 M
H/S B/C	19	13/20	13
D1	90.51	90.51	90.51
D2	34	34	34
LC	98.89	98.89	98.89
R1	24	24	24
R2	50	50	50
R3	61	59.5	62
R4	131.99	131.99	131.99
R5 (R/W)	39	40.5	38
R6 (B/C)	50	50	50

M = Minimum
H/S = Half Street
R/W = ROW
B/C = Back of Curb
LC=Arc Length

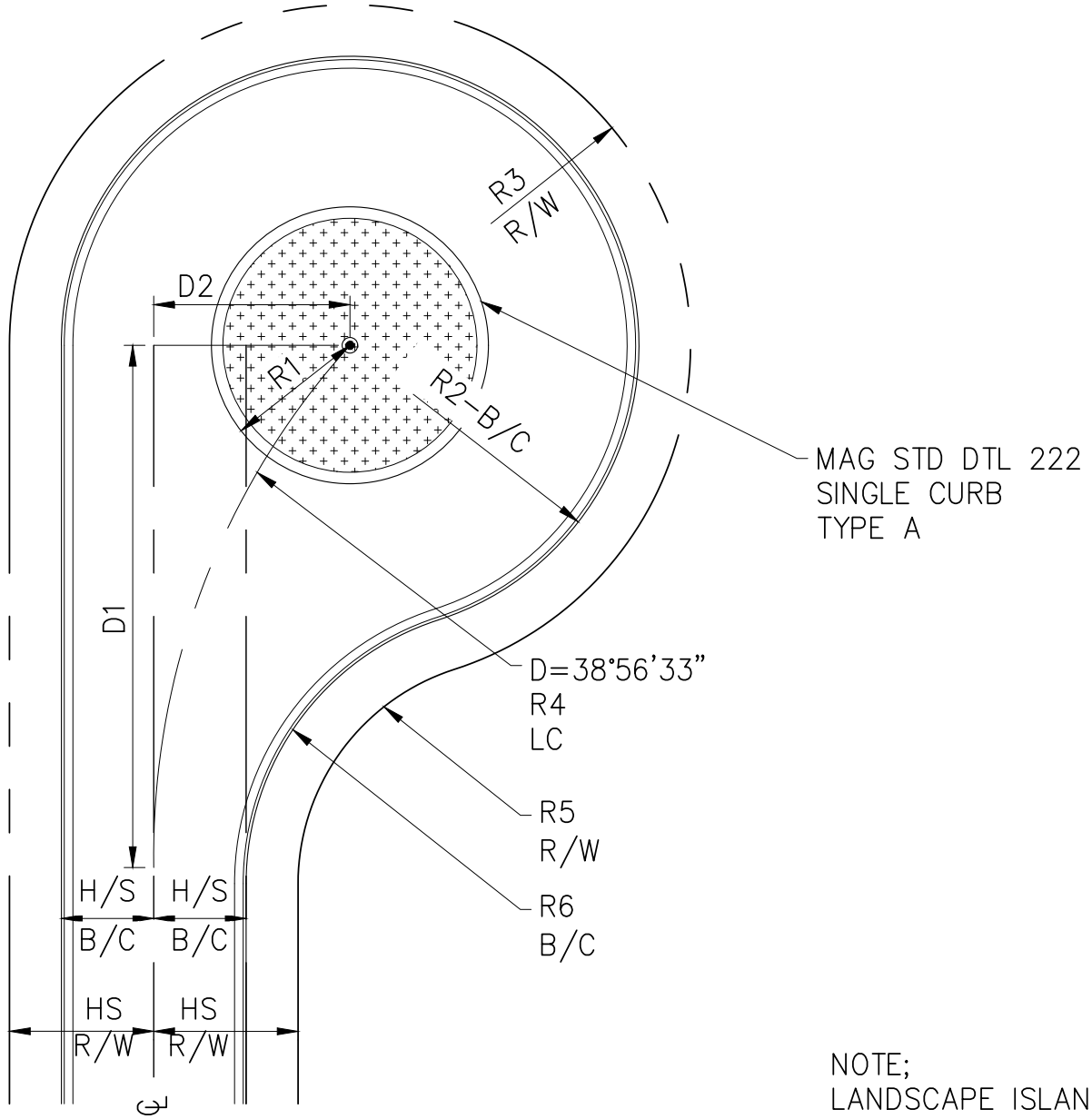

PLANTER

VERTICAL CURB & GUTTER

SINGLE CURB

NOTE;
LANDSCAPE ISLAND IS OPTIONAL

DETAIL NO.			REVISED	DETAIL NO.
MAR-222	CITY OF MARICOPA Proud History · Promising Future	STANARD OFF-SET CUL-DE-SAC WITH MEDIAN	01-01-2020	MAR-222

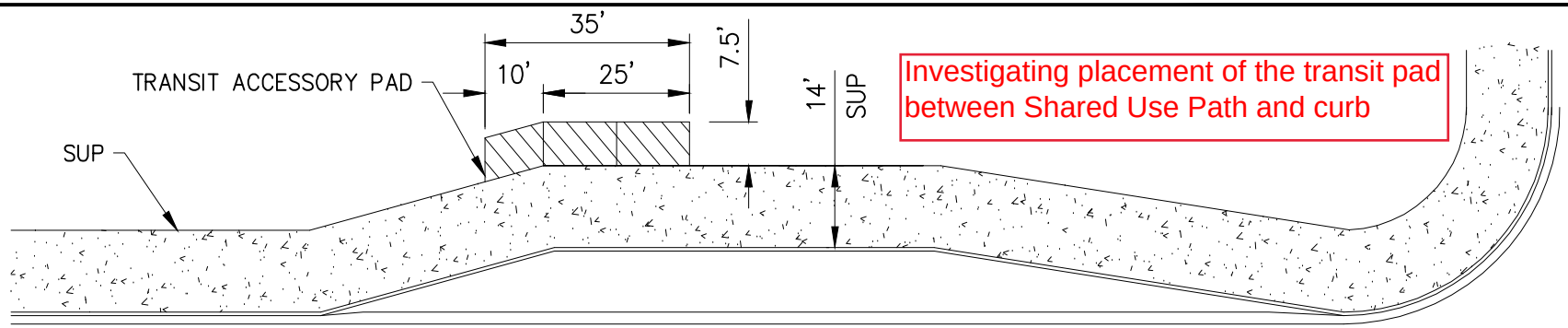

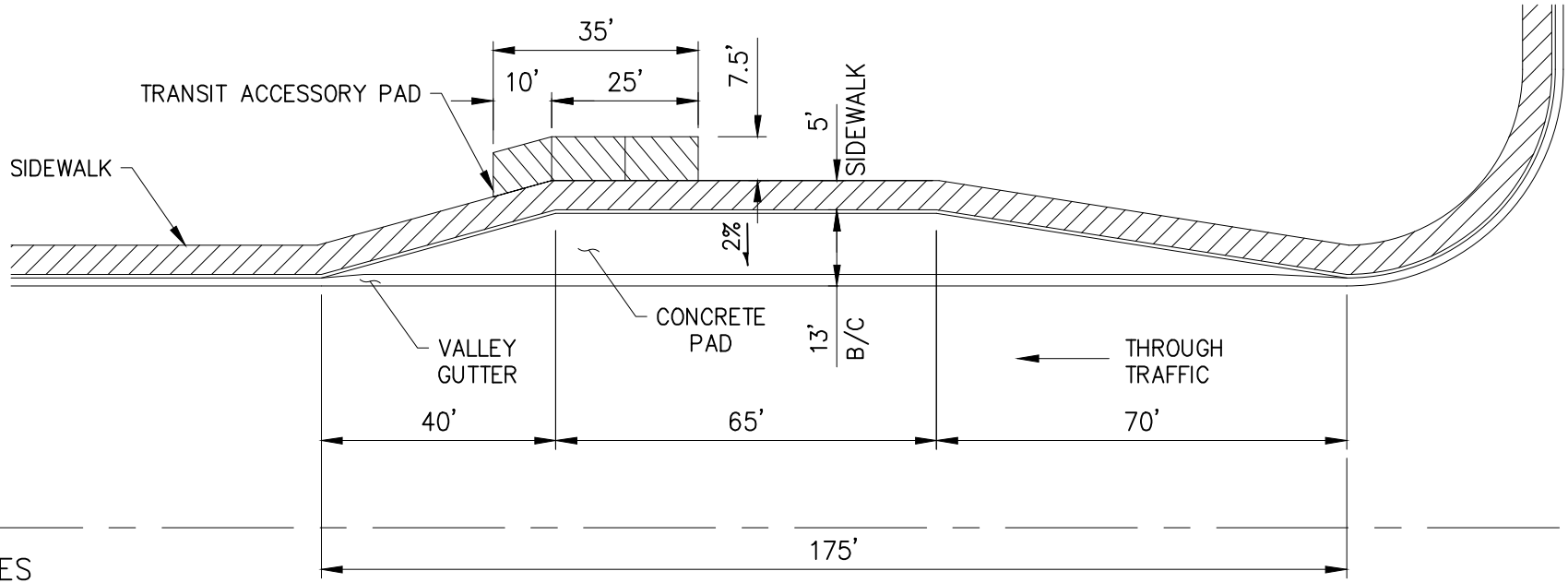

NOTES

1. DRAINAGE MUST BE ACCOMMODATED.
2. NO DRIVEWAY MAY BE PLACED WITHIN THE FAR SIDE BUS PULLOUT AND MUST BE A MINIMUM OF TEN (10) FEET FROM THE TRANSITION.
3. COMMUNITY MAIL BOXES WILL NOT BE PLACED WITHIN FAR SIDE BUS PULLOUT AND MUST BE PLACED AT LEAST TWENTY (20) FEET FROM THE TRANSITION.
4. ALL LANDSCAPING WITHIN THE FAR SIDE BUS PULLOUT SHALL MEET CITY GUIDELINES AND WILL BE MAINTAINED BY THE HOMEOWNERS ASSOCIATION OR COMMERCIAL PROPERTY MANAGER, AS APPROPRIATE.
5. NO PARKING WILL BE ALLOWED WITHIN THE FAR SIDE BUS PULLOUT.
6. CONCRETE PAD PER MAG STD DETAIL 252.

LEGEND

SIDEWALK

SUP (SHARED USE PATH)

DETAIL NO.			REVISED	DETAIL NO.
MAR-223	CITY OF MARICOPA Proud History · Prosperous Future	FAR SIDE BUS PULLOUT	01-01-2020	MAR-223

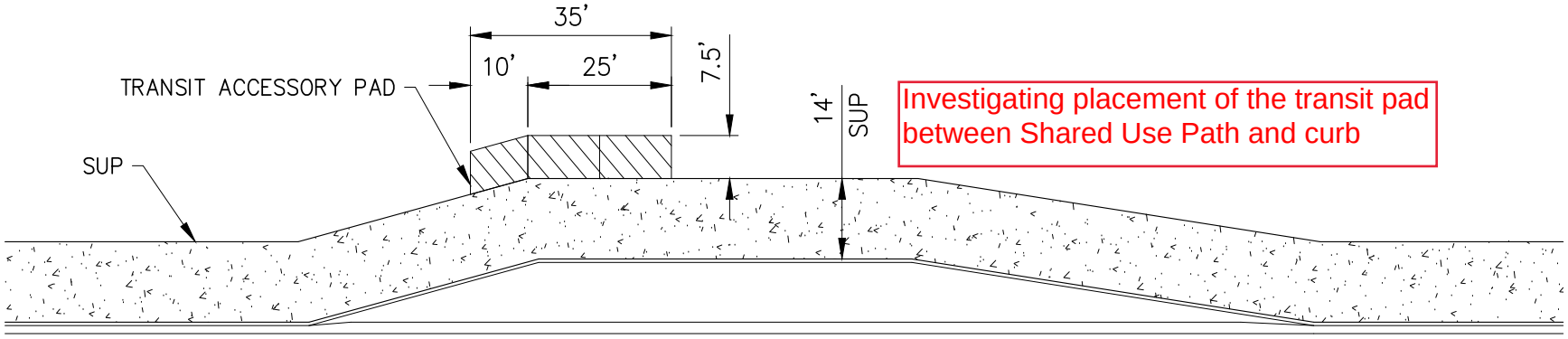

Investigating placement of the transit pad between Shared Use Path and curb

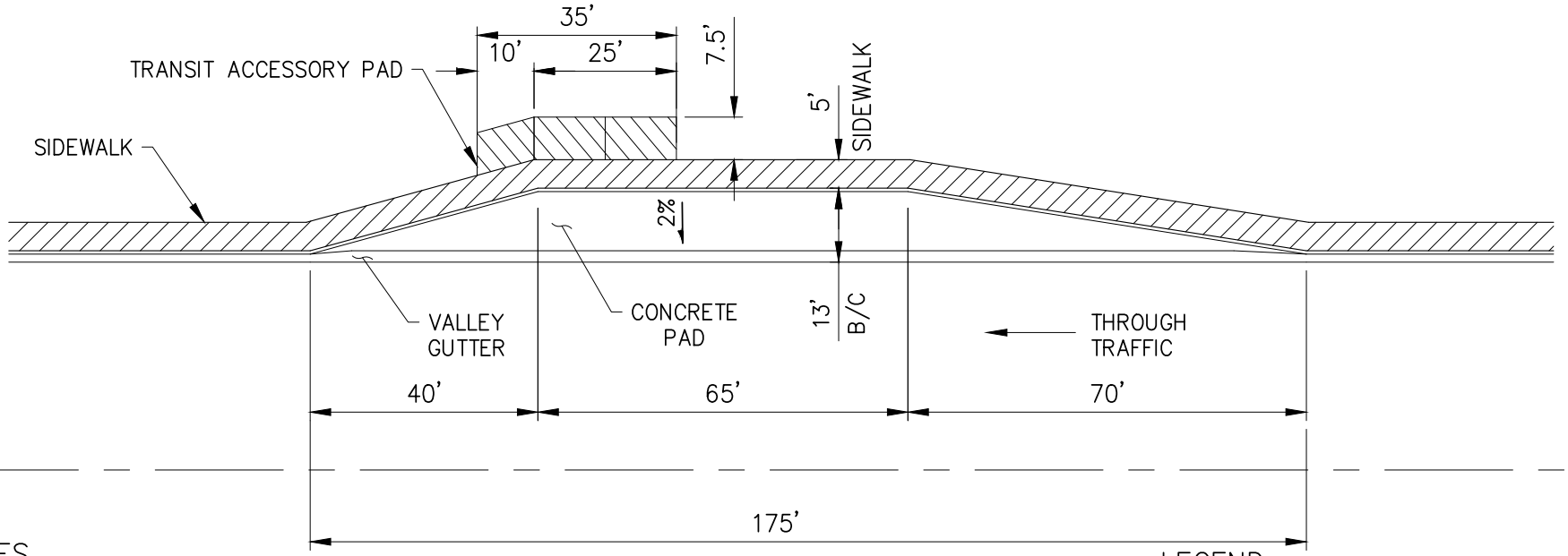

NOTES

1. DRAINAGE MUST BE ACCOMMODATED.
2. NO DRIVEWAY MAY BE PLACED WITHIN THE MID-BLOCK BUS PULLOUT AND MUST BE A MINIMUM OF TEN (10) FEET FROM THE TRANSITION.
3. COMMUNITY MAIL BOXES WILL NOT BE PLACED WITHIN MID-BLOCK BUS PULLOUT AND MUST BE PLACED AT LEAST TWENTY (20) FEET FROM THE TRANSITION.
4. ALL LANDSCAPING WITHIN THE MID-BLOCK BUS PULLOUT SHALL MEET CITY GUIDELINES AND WILL BE MAINTAINED BY THE HOMEOWNERS ASSOCIATION.
5. NO PARKING WILL BE ALLOWED WITHIN THE MID-BLOCK BUS PULLOUT.
6. CONCRETE PAD PER MAG STD DETAIL 252.

LEGEND

SIDEWALK

SUP (SHARED USE PATH)

DETAIL NO.			REVISED	DETAIL NO.
MAR-224	CITY OF MARICOPA Proud History · Prosperous Future	MIDBLOCK BUS PULLOUT	01-01-2020	MAR-224

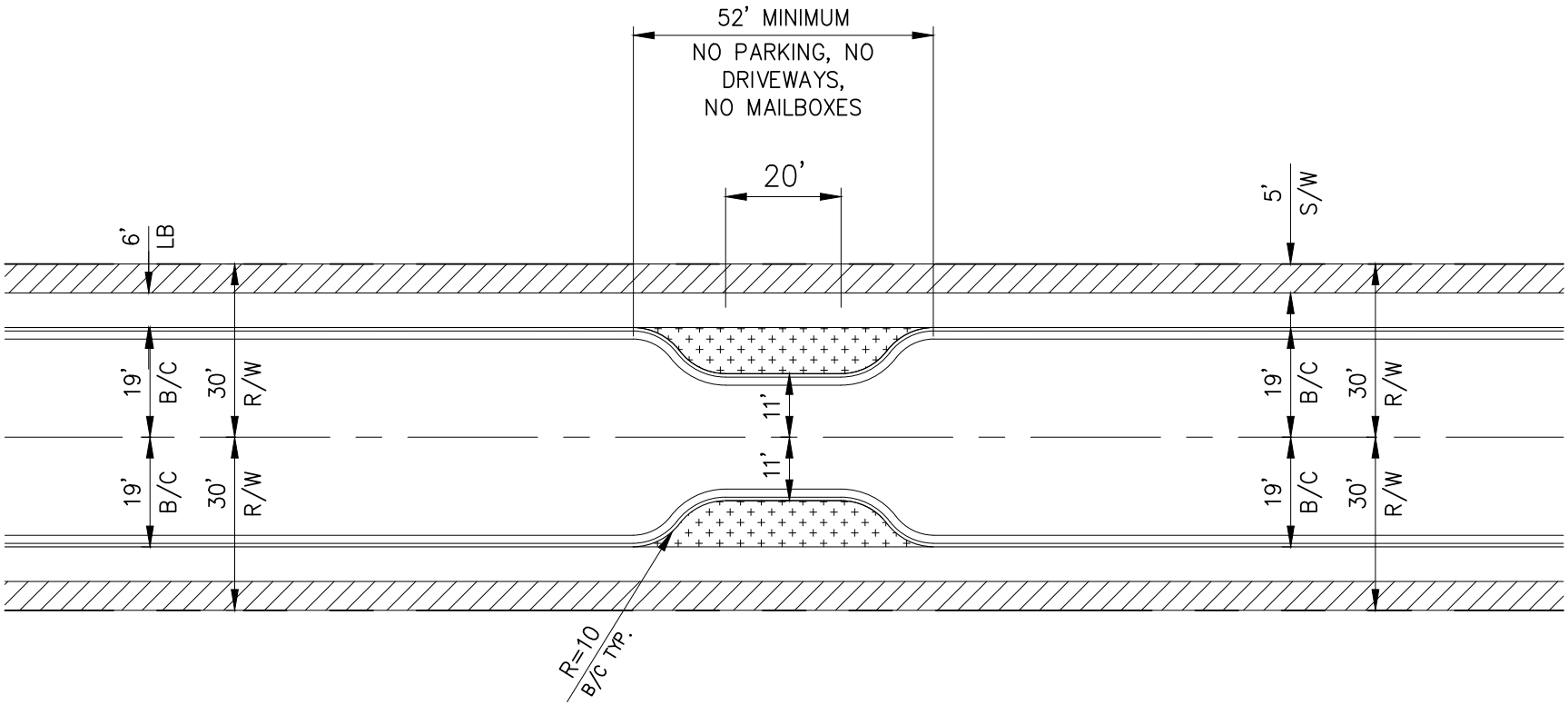

NOTES

1. DRAINAGE MUST BE ACCOMMODATED.
2. NO DRIVEWAY MAY BE PLACED WITHIN THE CHOKER AND MUST BE A MINIMUM OF TEN (10) FEET FROM THE TRANSITION.
3. COMMUNITY MAIL BOXES WILL NOT BE PLACED WITHIN CHOKER AND MUST BE PLACED AT LEAST TWENTY (20) FEET FROM THE TRANSITION.
4. ALL LANDSCAPING WITHIN THE CHOKER SHALL MEET CITY GUIDELINES AND WILL BE MAINTAINED BY THE HOMEOWNERS ASSOCIATION.
5. NO PARKING WILL BE ALLOWED WITHIN THE CHOKER.

LEGEND

	VERTICAL CURB & GUTTER
	PLANTER
	SIDEWALK
LB	LANDSCAPE BUFFER

DETAIL NO.			REVISED	DETAIL NO.
MAR-225	CITY OF MARICOPA PROUD HERITAGE · PROSPEROUS FUTURE	TRAFFIC CALMING LOCAL STREET - CHOKER	01-01-2020	MAR-225

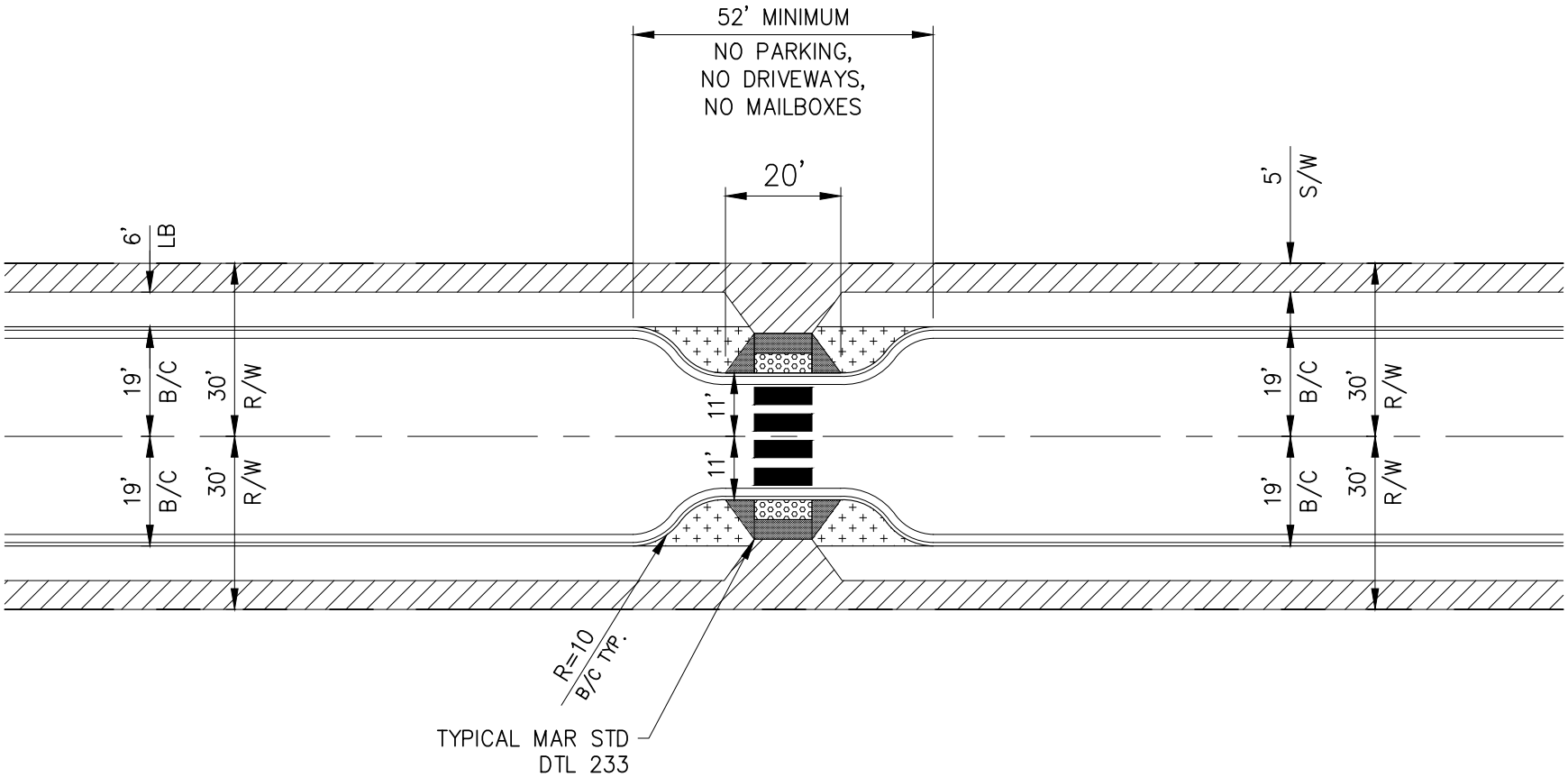

NOTES

1. DRAINAGE MUST BE ACCOMMODATED.
2. NO DRIVEWAY MAY BE PLACED WITHIN THE CHOKER AND MUST BE A MINIMUM OF TEN (10) FEET FROM THE TRANSITION.
3. COMMUNITY MAIL BOXES WILL NOT BE PLACED WITHIN CHOKER AND MUST BE PLACED AT LEAST TWENTY (20) FEET FROM THE TRANSITION.
4. ALL LANDSCAPING WITHIN THE CHOKER SHALL MEET CITY GUIDELINES AND WILL BE MAINTAINED BY THE HOMEOWNERS ASSOCIATION.
5. NO PARKING WILL BE ALLOWED WITHIN THE CHOKER.

LEGEND

	VERTICAL CURB & GUTTER
	PLANTER
	SIDEWALK
LB	LANDSCAPE BUFFER

DETAIL NO.			REVISED	DETAIL NO.
MAR-225-I	CITY OF MARICOPA PROUD HISTORY · PROSPEROUS FUTURE	TRAFFIC CALMING LOCAL STREET - CHOKER & CROSS WALK	01-01-2020	MAR-225-I

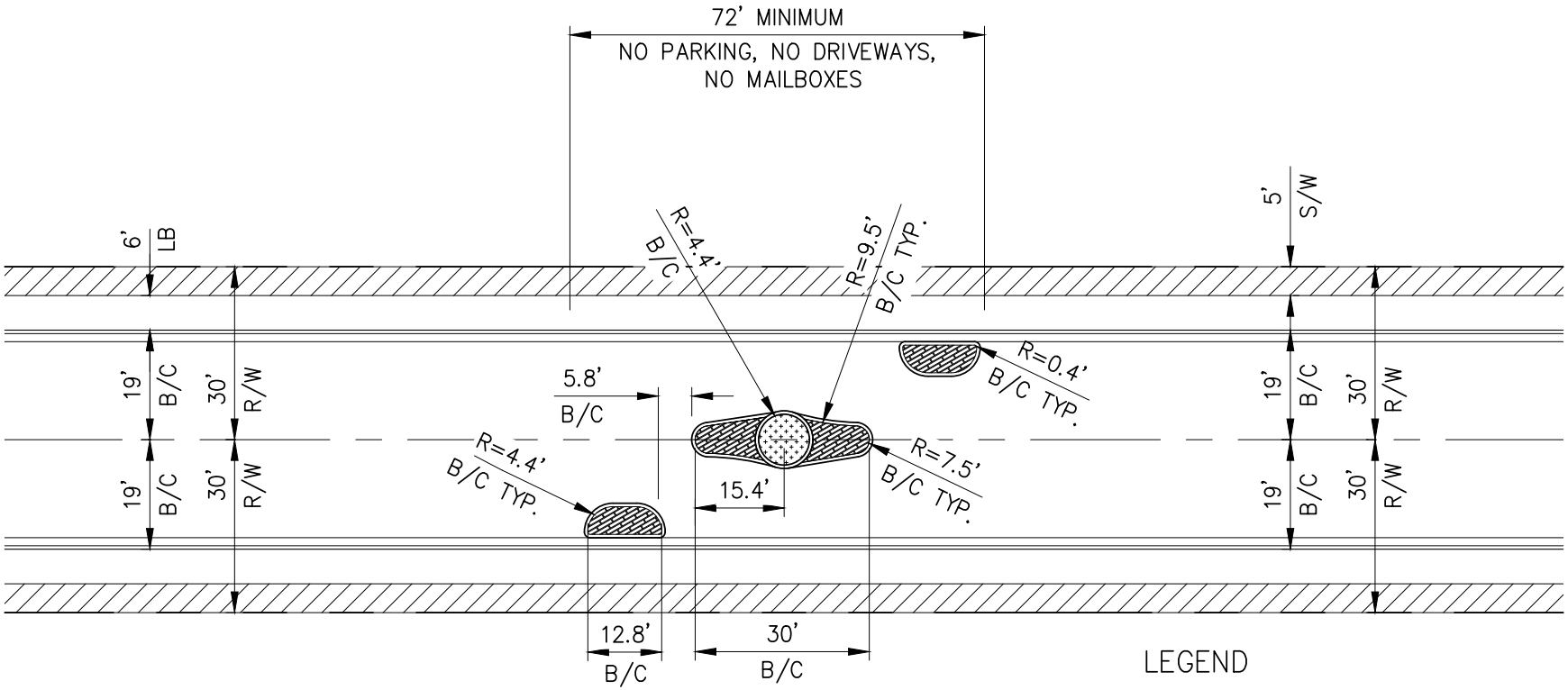

LEGEND

	VERTICAL CURB & GUTTER
	SINGLE CURB
	SIDEWALK
	PAVERS
	PLANTER (GROUND COVER MAX HT 4")
LB	LANDSCAPE BUFFER

NOTES

1. DRAINAGE MUST BE ACCOMMODATED.
2. NO DRIVEWAY MAY BE PLACED WITHIN THE CHICANE AND MUST BE A MINIMUM OF TEN (10) FEET FROM THE TRANSITION.
3. COMMUNITY MAIL BOXES WILL NOT BE PLACED WITHIN CHICANE AND MUST BE PLACED AT LEAST TWENTY (20) FEET FROM THE TRANSITION.
4. ALL LANDSCAPING WITHIN THE CHICANE SHALL MEET CITY GUIDELINES AND WILL BE MAINTAINED BY THE HOMEOWNERS ASSOCIATION.
5. NO PARKING WILL BE ALLOWED WITHIN THE CHICANE.

DETAIL NO.			REVISED	DETAIL NO.
MAR-226	CITY OF MARICOPA PROUD HISTORY · PROSPEROUS FUTURE	TRAFFIC CALMING LOCAL STREET - CHICANE	01-01-2020	MAR-226

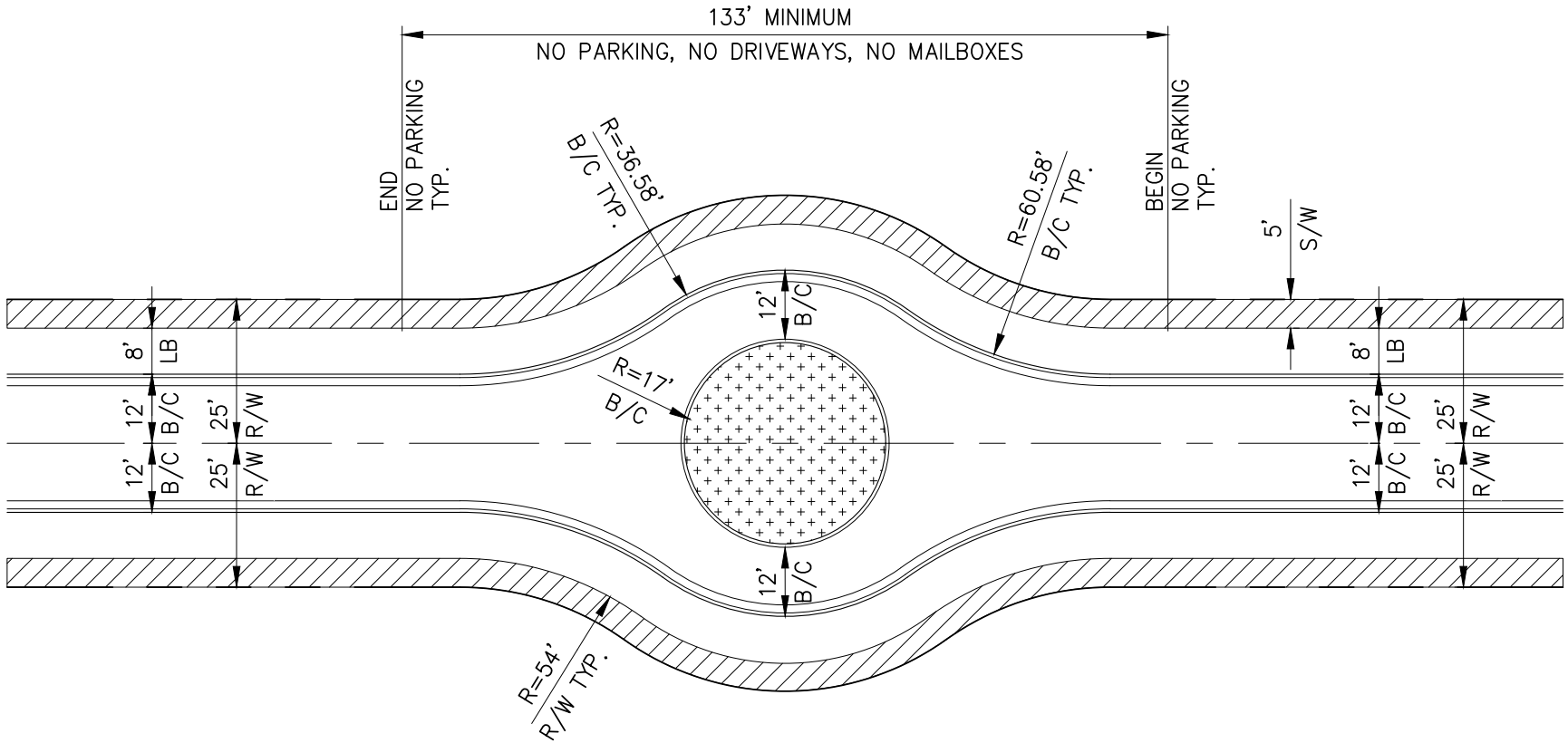

NOTES

1. DRAINAGE MUST BE ACCOMMODATED.
2. NO DRIVEWAY MAY BE PLACED WITHIN THE BASEBALL AND MUST BE A MINIMUM OF TEN (10) FEET FROM THE TRANSITION.
3. COMMUNITY MAIL BOXES WILL NOT BE PLACED WITHIN BASEBALL AND MUST BE PLACED AT LEAST TWENTY (20) FEET FROM THE TRANSITION.
4. ALL LANDSCAPING WITHIN THE BASEBALL SHALL MEET CITY GUIDELINES AND WILL BE MAINTAINED BY THE HOMEOWNERS ASSOCIATION.
5. NO PARKING WILL BE ALLOWED WITHIN THE BASEBALL.

LEGEND

	SINGLE CURB
	VERTICAL CURB & GUTTER
	PLANTER (GROUND COVER NOT TO EXCEED HT 6")
	SIDEWALK
LB	LANDSCAPE BUFFER

DETAIL NO.			REVISED	DETAIL NO.
MAR-227-I	CITY OF MARICOPA Proud History · Promising Future	TRAFFIC CALMING LOCAL STREET - BASEBALL	01-01-2020	MAR-227-I

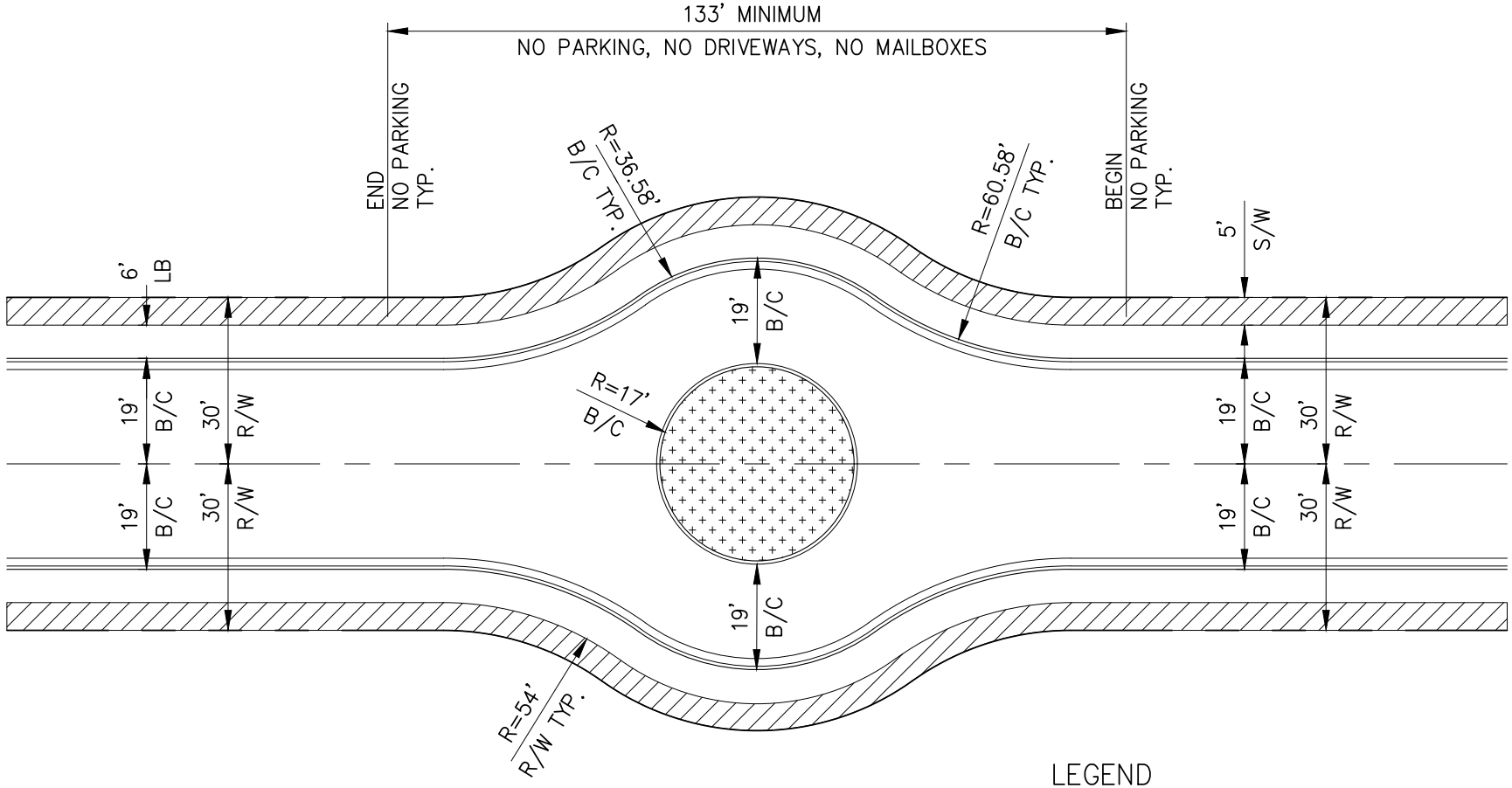

NOTES

1. DRAINAGE MUST BE ACCOMMODATED.
2. NO DRIVEWAY MAY BE PLACED WITHIN THE BASEBALL AND MUST BE A MINIMUM OF TEN (10) FEET FROM THE TRANSITION.
3. COMMUNITY MAIL BOXES WILL NOT BE PLACED WITHIN BASEBALL AND MUST BE PLACED AT LEAST TWENTY (20) FEET FROM THE TRANSITION.
4. ALL LANDSCAPING WITHIN THE BASEBALL SHALL MEET CITY GUIDELINES AND WILL BE MAINTAINED BY THE HOMEOWNERS ASSOCIATION.
5. NO PARKING WILL BE ALLOWED WITHIN THE BASEBALL.

LEGEND

	SINGLE CURB
	VERTICAL CURB & GUTTER
	PLANTER (GROUND COVER NOT TO EXCEED HT 6")
	SIDEWALK
LB	LANDSCAPE BUFFER

DETAIL NO.			REVISED	DETAIL NO.
MAR-227-II	CITY OF MARICOPA Proud History · Prosperous Future	TRAFFIC CALMING LOCAL STREET - BASEBALL	01-01-2020	MAR-227-II

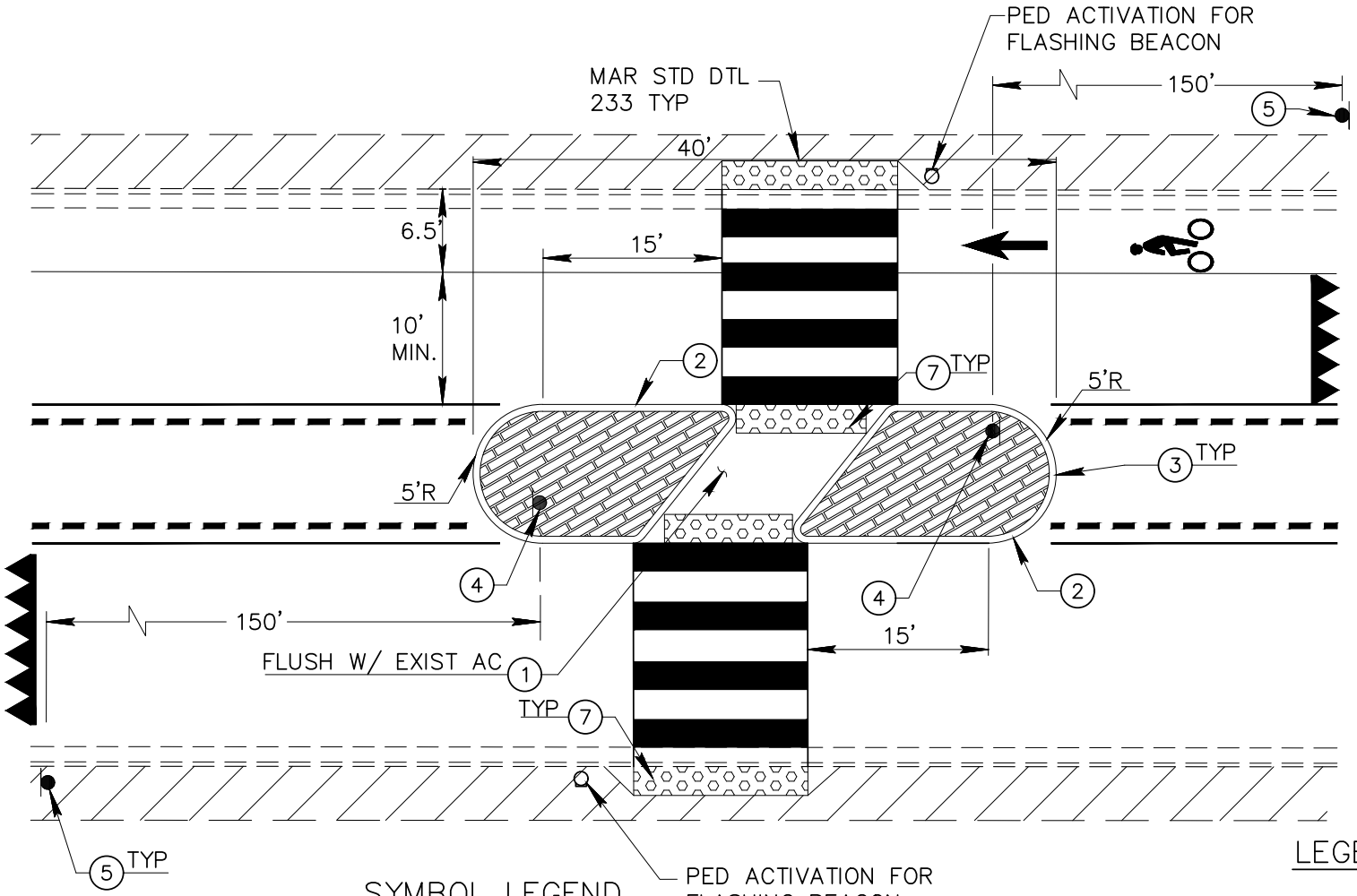

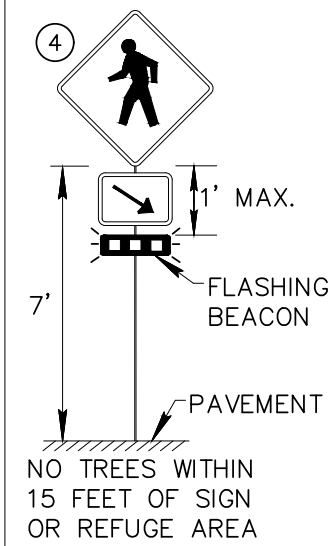

SYMBOL LEGEND

1. 8" CLASS "A" CONCRETE PVMT PER MAG SPEC 324 & 725
2. SINGLE CURB PER MAG DTL 222 TYPE "A"
3. MEDIAN NOSE PER MAG STD. DETAIL 223
4. SIGNING 30" X 30" W11-2 ABOVE 24" X 12" W16-7P-R BELOW
5. IF POSTED SPEED > 40 MPH, INSTALL ADVANCE 30" X 30" W11-2 PER MUTCD
6. 9" TEXT W/ARROW (OPTIONAL)
7. DETECTABLE WARNING SURFACE

LEGEND

- VERTICAL CURB & GUTTER
- SINGLE CURB
- SIDEWALK
- PAVERS
- YIELD LINE LAYOUT
- DETECTABLE WARNING PAD

DETAIL NO.			REVISED	DETAIL NO.
MAR-228	CITY OF MARICOPA — Proud History · Promising Future	MIDBLOCK PEDESTRIAN REFUGE	01-01-2020	MAR-228

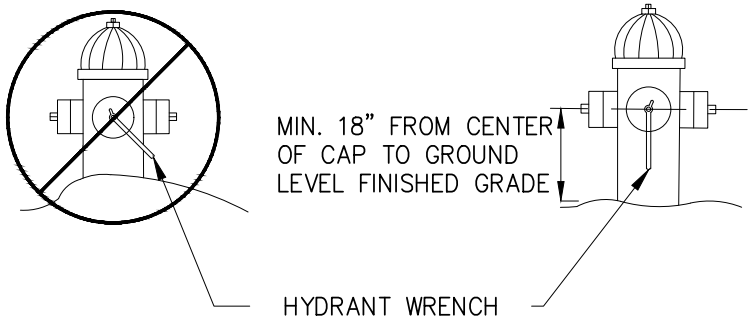

NOTES:

1. OBSTRUCTION SUCH AS UTILITY POLES, STREET SIGNS, IRRIGATION BOXES, FENCES, ETC., MUST NOT BE PLACED BETWEEN CURB AND HYDRANT AND WITHIN THE RADIUS FOR FIRE DEPT. ACCESS.
2. ON LOCATIONS IN MIDBLOCK, THE FIRE HYDRANT WILL BE ALIGNED WITH A PROPERTY LINE.
3. MAINTAIN VISIBILITY FROM THE STREET.

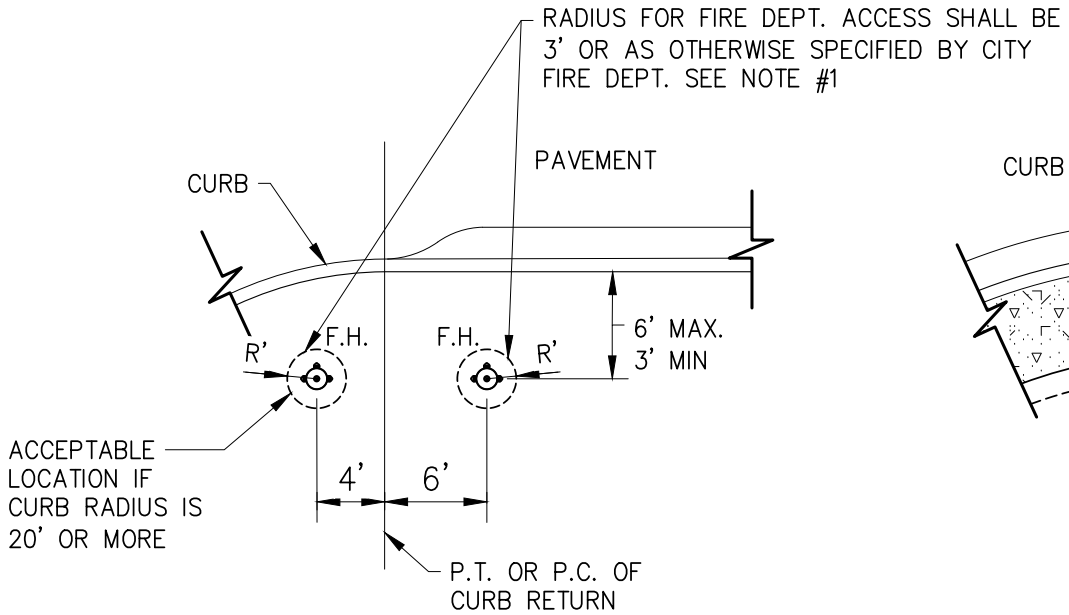

PARKWAY AREA OR NO SIDEWALK

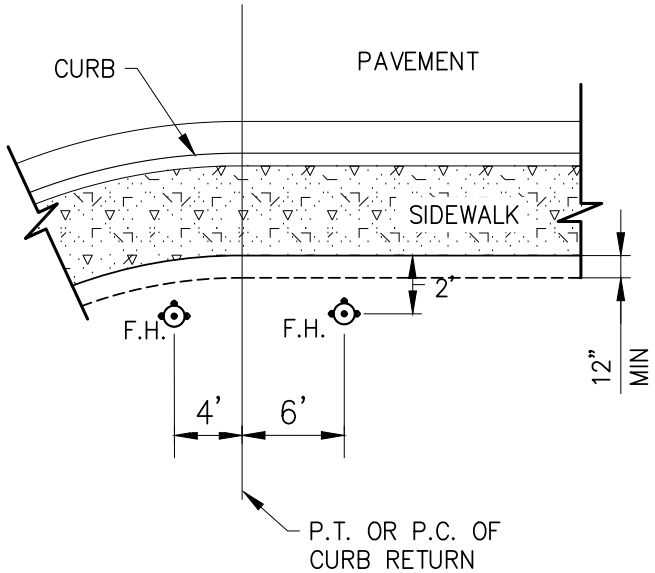

AREA WITH SIDEWALK

DETAIL NO.			REVISED	DETAIL NO.
MAR-229	CITY OF MARICOPA Proud History · Prosperous Future	LOCATIONS FOR NEW FIRE HYDRANTS	01-01-2020	MAR-229

1. LENGTH: DEPENDS ON LENGTH OF STREET NAME; LENGTHS GREATER THAN 48" NEED TO BE APPROVED BY THE ENGINEER.
2. METAL: 0.080 GAUGE, 6061–T6 OR 5052–H3B ALLOY SHEET ALUMINUM.
3. REFLECTIVE SHEETING: BACKGROUND SHALL BE WHITE 3M TYPE XI OR EQUIVALENT COVER WITH BROWN ELECTROCUT 1179, MATCH COMPONENT SYSTEM.
4. LETTERS, NUMBERS, ETC. TO BE PRESSURE SENSITIVE ACRYLIC EC FILM.
5. LETTER, NUMBERS AND SPACING SHALL BE PER U.S. DEPARTMENT OF TRANSPORTATION STANDARD ALPHABETS FOR HIGHWAY SIGNS AND PAVEMENT MARKINGS SERIES B.
6. COLOR: TO BE PER LATEST ADOT STANDARDS WITH THE BACKGROUND BROWN AND THE COPY (MARGIN AND LEGEND) WHITE WITH THE EXCEPTION OF PRIVATE STREET WHICH SHALL HAVE BLUE BACKGROUND.
7. SIGN PANELS BE FREE OF BUCKLES, WARPS, DENTS, COCKLES, BURPS AND DEFECTS RESULTING FROM FABRICATION AND SHIPPING.
8. PRESSURE SENSITIVE COPY MUST PROVIDE MINIMUM 10 YEAR DURABILITY WITH PREMATURE FAILURE DUE TO NATURAL WEATHERING OR SIGN TO BE REPLACED BY VENDOR AT NO CHARGE TO THE CITY OF MARICOPA. FAILURE IS INTERPRETED TO BE CRACKING OR PEELING OF BACKGROUND OR LEGEND FROM NORMAL WEATHERING.
9. THE SIGN MANUFACTURER SHALL SUBMIT A NOTARIZED CERTIFICATION OF COMPLIANCE TO THE CITY OF MARICOPA STATING THAT THE THE MANUFACTURE PROCEDURE AND THE MATERIALS FURNISHED CONFORM TO THE REQUIREMENTS OF THE PROVISIONS.
10. DIMENSIONS (INCHES)

WHEN APPROACHED ON:	A	B	C	D
POST MOUNTED OVER 25 MPH	10	5	6	4.5
POST MOUNTED UNDER 30 MPH	8	4	4	3

DETAIL NO.			APPROVED	DETAIL NO.
MAR-230	CITY OF MARICOPA Proud History · Prosperous Future	STREET NAME SIGN	CITY ENGINEER / DATE	MAR-230

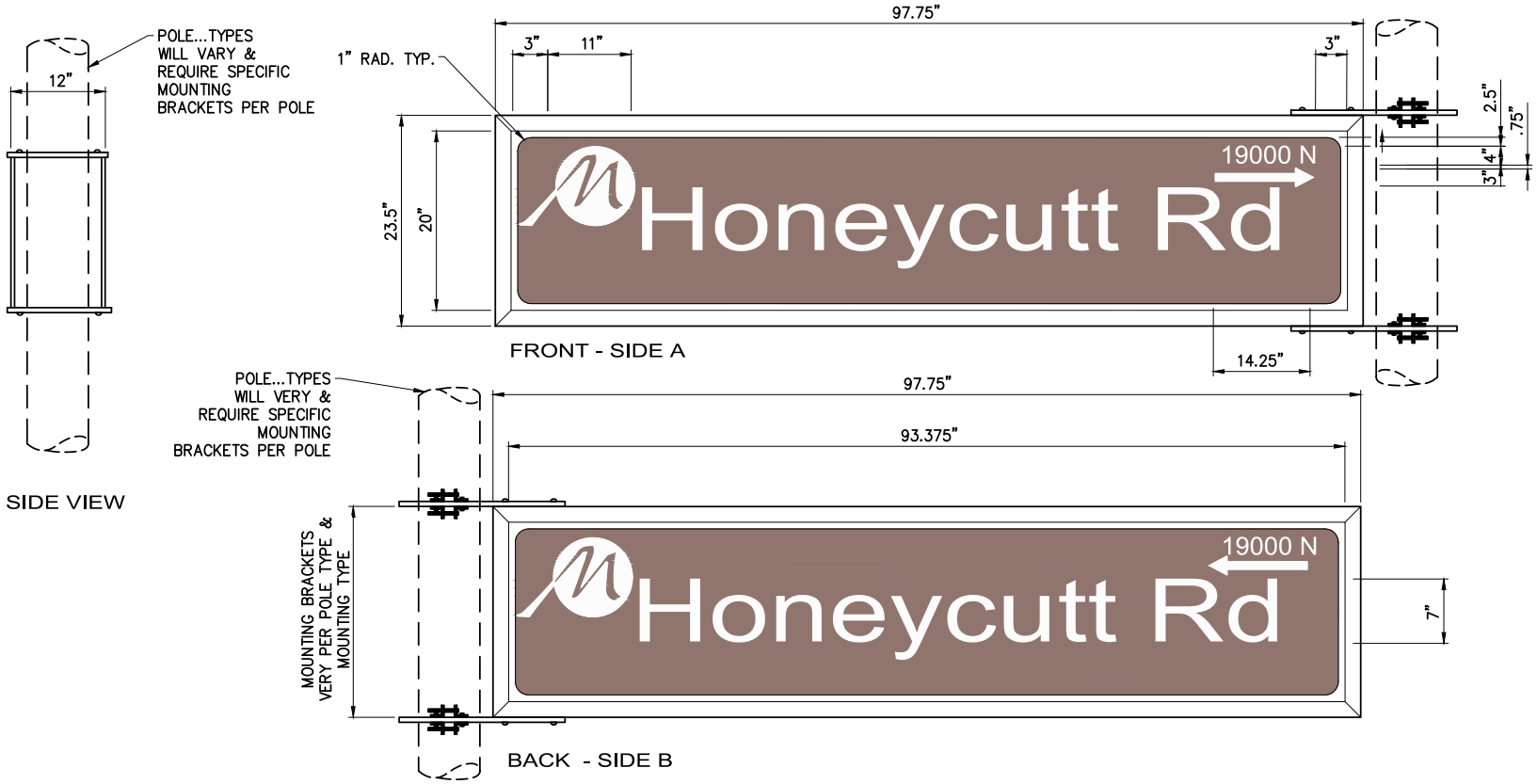

FACE: 3M DIAMOND GRADE TRANSLUCENT DG3 REFLECTIVE SHEETING: SERIES 4090T AND 3M 1177C EC FILM: 3/16" THICK TRANSLUCENT LEXAN POLYCARBONATE SHEET–WHITE.

BACKGROUND: 3M DIAMOND GRADE TRANSLUCENT DG3 REFLECTIVE SHEETING; SERIES 4090T AND 3M 1177C EC FILE: 3/16" THICK TRANSLUCENT LEXAN POLYCABONATE SHEET–BROWN WITH REVERSED OUT COPY AND WHITE BORDER

LOGO: 3M DIAMOND GRADE TRANSLUCENT DG3 REFLECTIVE SHEETING: SERIES 4090T AND 3M 1177C EC FILE: 3/16" THICK TRANSLUCENT LEXAN POLYCARBONATE SHEET–PMS 329C WHITE AND PMS 876C BROWN

FONT: HWY GOTHIC SERIES D (2002); STREET NAME AT NORMAL SPACING: WORD SPACING AT 400%

ILLUMINATION: GE TETRA EDGE STRIP HIGH OUTPUT GEBIH50–1 500K LED MODULE; 16 PER SIGN (8 TOP & 8 BOTTOM); I–GEPS24–100–NA POWER SUPPLY 1.1 AMPS @ 120 VOLTS

CABINET: 12" DEEP EXTRUDED ALUMINUM WITH MITERED CORNERS; 1–1/2" HINGED FACE FRAMES; MILL FINISH INSTALLATION; FLAG MOUNT BRACKETS

SIZE: SIGN LENGTH REDUCED TO PROVIDE 6' SIGN LENGTH AND 4' SIGN LENGTH IN ADDITION TO THE 8' SIGN LENGTH SHOWN

DETAIL NO.			REVISED	DETAIL NO.
MAR-231	CITY OF MARICOPA Proud History · Promising Future	ILLUMINATED STREET SIGN	01–01–2020	MAR-231

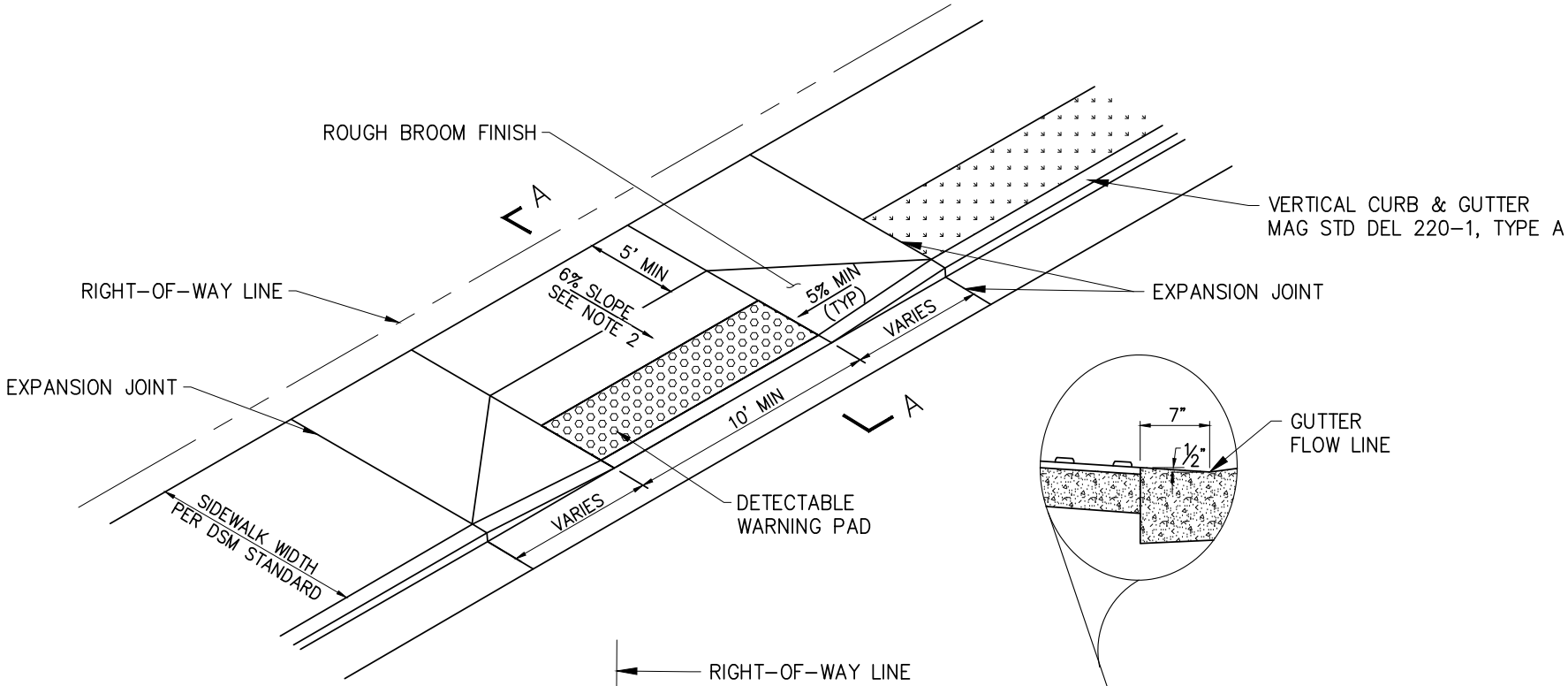

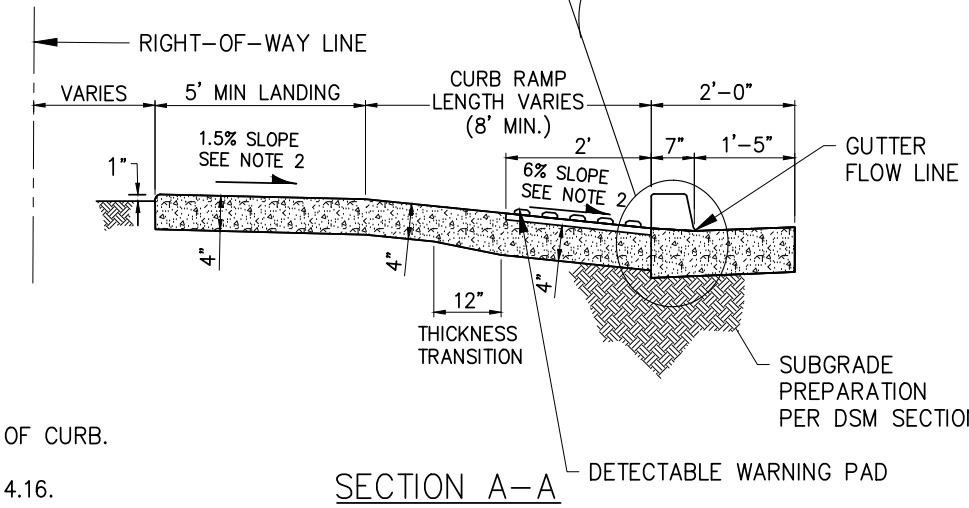

SECTION A–A

NOTE:

1. CLASS 'B' CONCRETE PER MAG STD SPEC 725.
2. CONSTRUCTION INCLUDING JOINTS AND MAXIMUM SLOPES SHALL CONFORM TO MAG STD SPEC 340.
3. SIDEWALK SURFACE TO MATCH A 1.5% SLOPE FROM TOP OF CURB.
4. DETECTABLE WARNING IS TO COMPLY WITH DSM SECTION 4.16.
5. A PUBLIC ACCESS EASEMENT MAY BE REQUIRED WHERE ROW IS INADEQUATE.

DETAIL NO.			REVISED	DETAIL NO.
MAR-232	CITY OF MARICOPA Proud History · Promising Future	COMBINATION CURB RAMP	01-01-2020	MAR-232

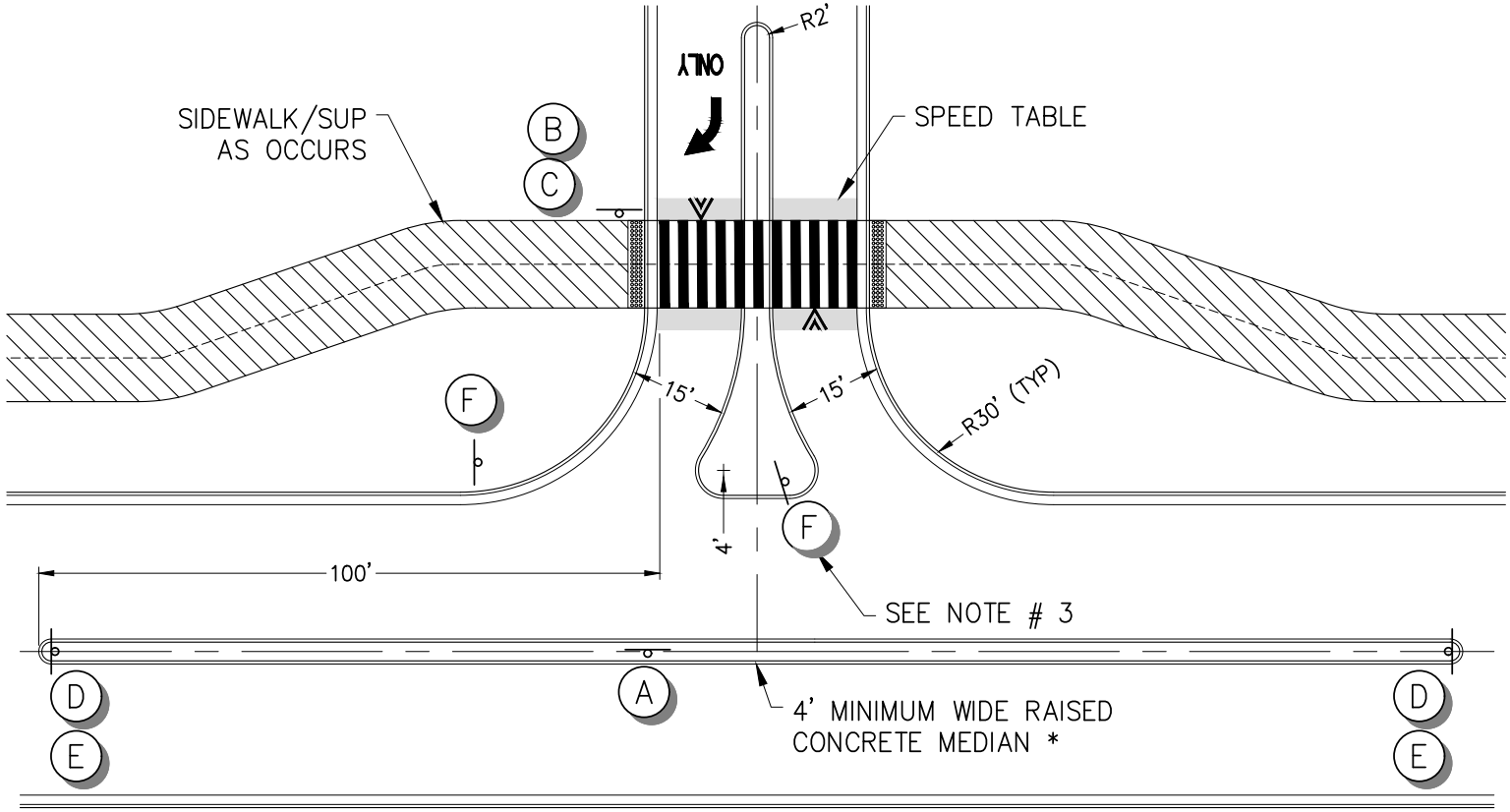

* MEDIAN USED ON UNDIVIDED ROADWAYS

SIGN LEGEND

A

R6–1R
36" x 12"

B

R1–1
30" x 30"

C

R3–5R
30" x 36"

D

R4–7
24" x 30"

E

OM–3L
12" x 36"

F

R5–1
30" x 30"

NOTES

1. MOUNT SIGN B & C ON SAME POST WITH STOP SIGN ON TOP.
2. MOUNT SIGN D & E ON SAME POST WITH KEEP RIGHT SIGN ON TOP.
3. IN AREAS WITHOUT MEDIANS, SIGNS A, D, AND E WILL NOT BE USED AND AN ADDITIONAL F SIGN SHALL BE INSTALLED AS SHOWN.

DETAIL NO.			REVISED	DETAIL NO.
MAR-233	CITY OF MARICOPA — Proud History · Promising Future	STANDARD RIGHT IN-RIGHT OUT CHANNELIZATION	01–01–2020	MAR-233

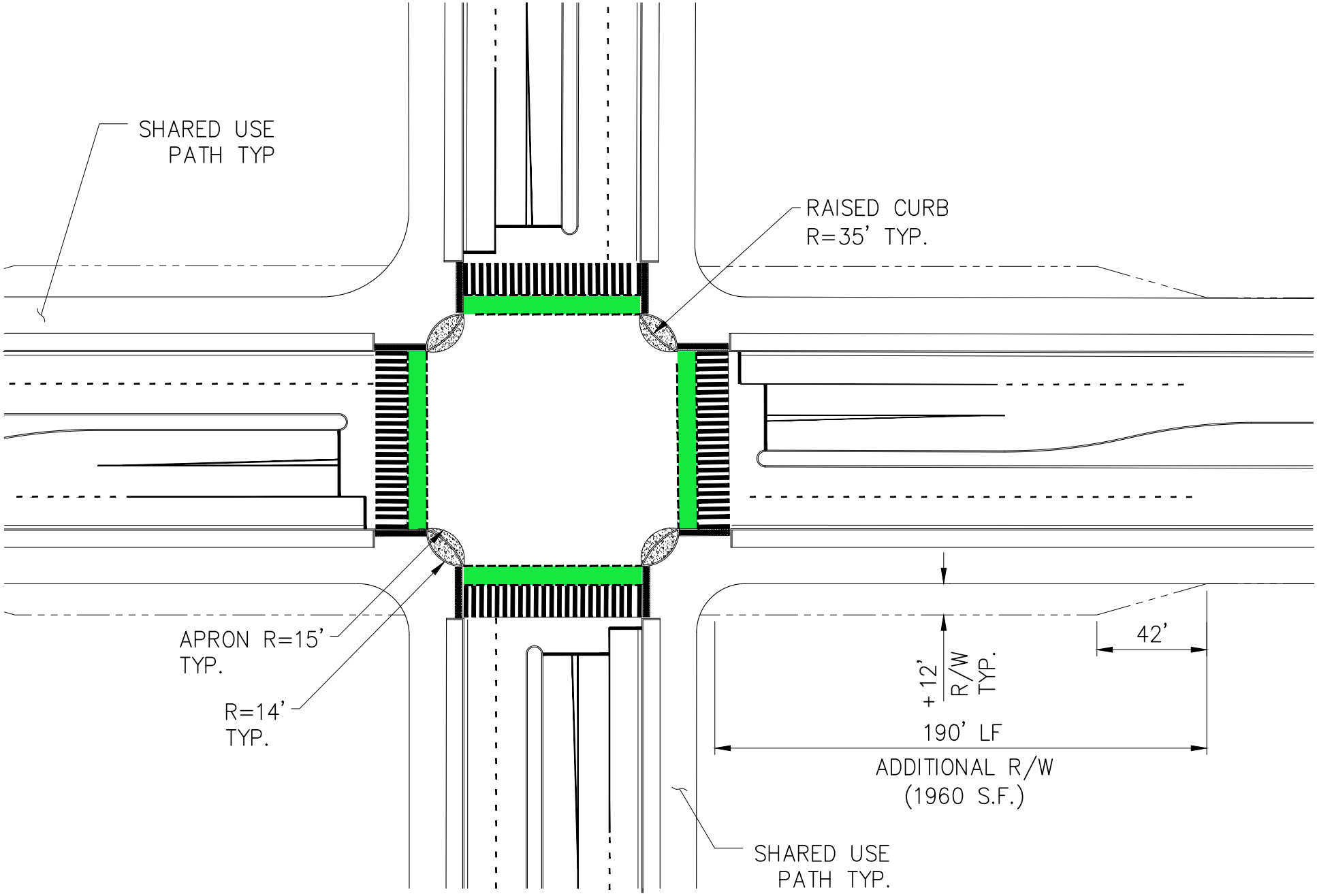

DETAIL NO.			REVISED	DETAIL NO.
MAR-234	CITY OF MARICOPA PROUD HERITAGE · PROSPEROUS FUTURE	INTERSECTION MINOR ARTERIAL - MINOR ARTERIAL	01-01-2020	MAR-234

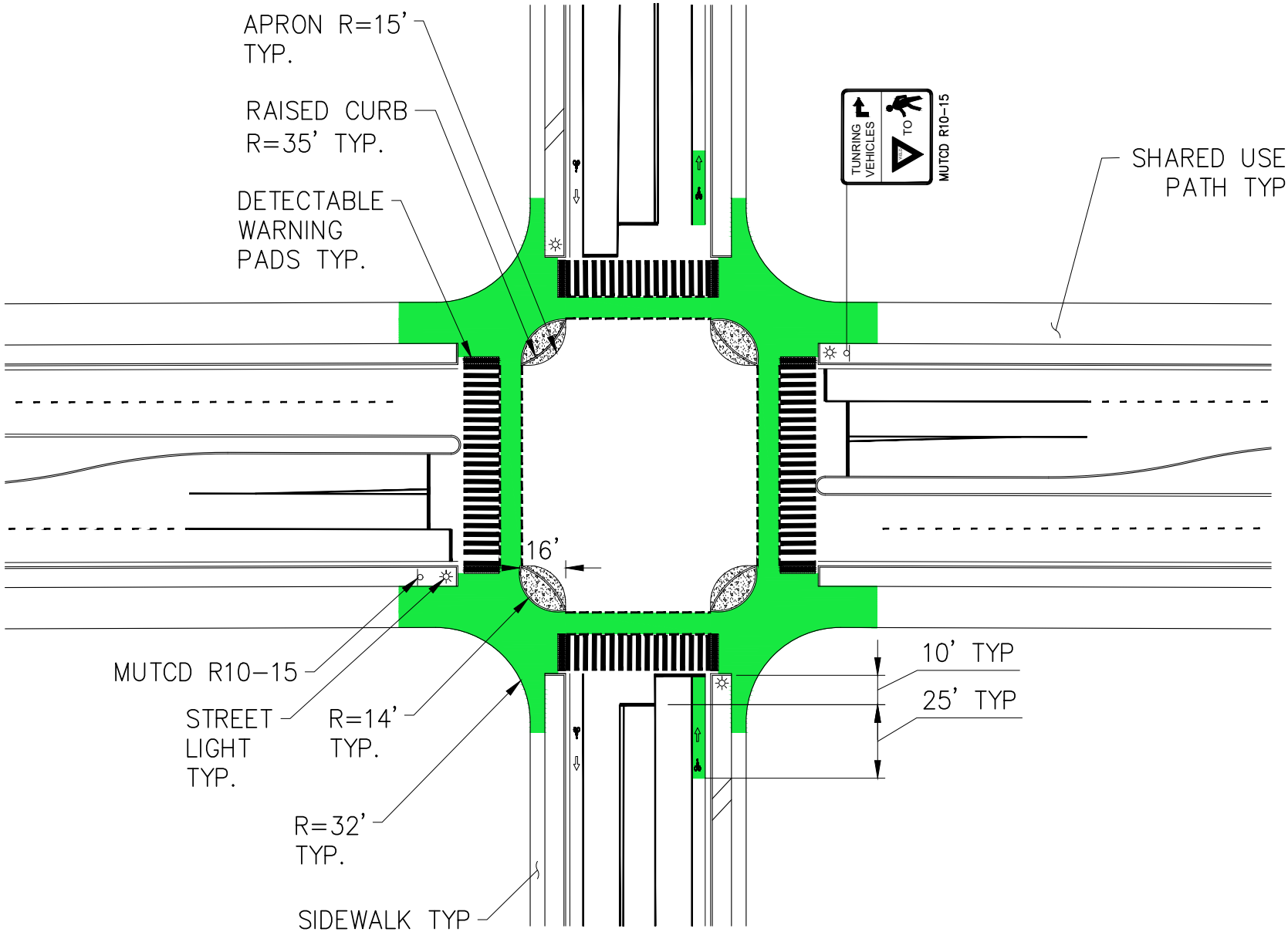

DETAIL NO.			REVISED	DETAIL NO.
MAR-235	CITY OF MARICOPA Proud History · Prosperous Future	INTERSECTION MINOR ARTERIAL-RESIDENTIAL COLLECTOR	01-01-2020	MAR-235

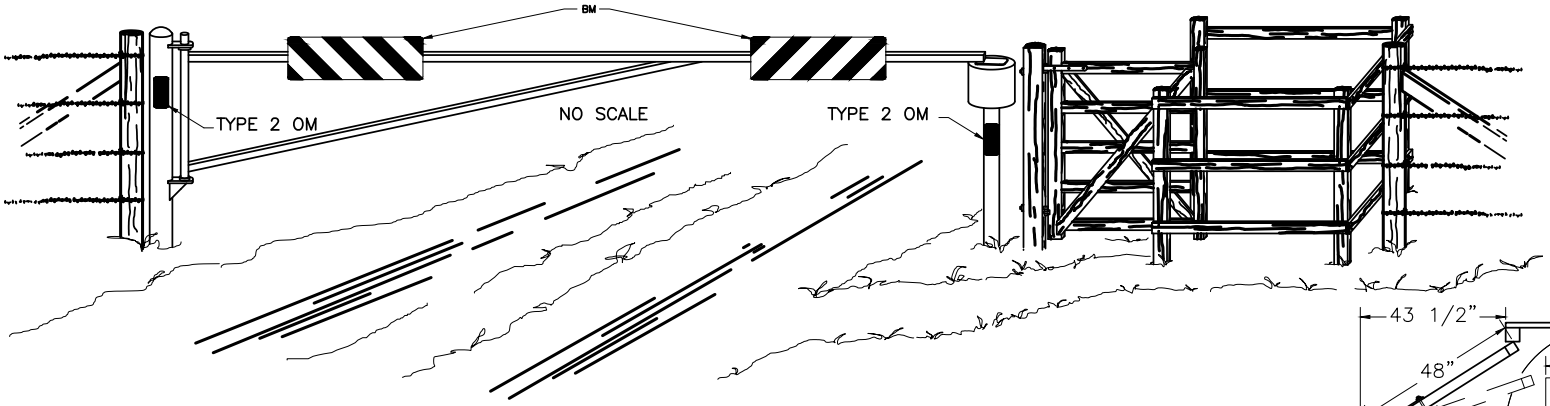

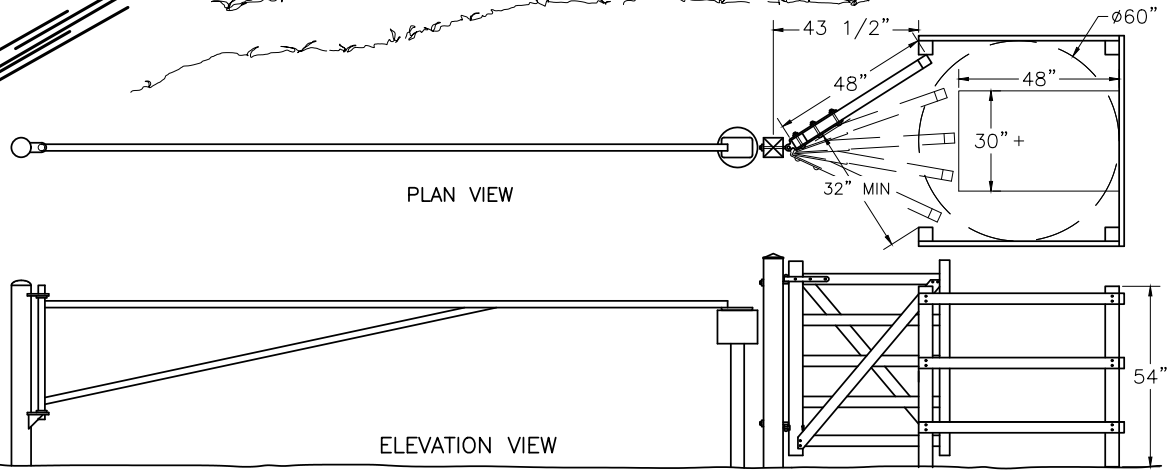

ROAD CLOSURE GATE
SIGNING NOT SHOWN FOR CLARITY

NOTES:

1. INSIDE DIMENSIONS ARE MINIMUM CLEAR DISTANCES REQUIRED TO MEET ACCESSIBILITY STANDARDS.
2. ROAD CLOSURE GATE MAY VARY.
3. THESE DRAWINGS ARE TYPICAL DRAWINGS AND MAY REQUIRE MINOR MODIFICATION FOR INSTALLATION.

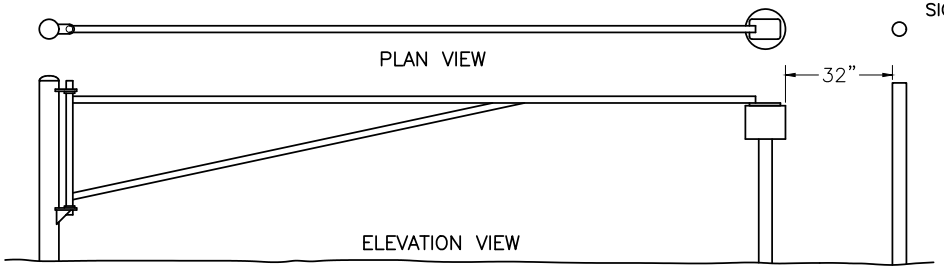

ROAD CLOSURE GATE WITH POST
SIGNING NOT SHOWN FOR CLARITY

N.T.S

DETAIL NO.			REVISED	DETAIL NO.
MAR-236	CITY OF MARICOPA PROUD HERITAGE · PROSPEROUS FUTURE	ROAD CLOSURE GATE	01-01-2020	MAR-236

Sample Cement-Modified Soil Specification

1. GENERAL

1.1 Description. Cement-modified soil (CMS) shall consist of soil/aggregate, portland cement, and water proportioned, mixed, compacted, and cured in accordance with these specifications; and shall conform to the lines, grades, thicknesses, and typical cross sections shown in the plans.

1.2 Caveat. These specifications are intended to serve as a guide to format and content for normal CMS construction. Most projects have features or requirements that should be incorporated in the project documents.

2. REFERENCED DOCUMENTS

ASTM International (ASTM) with corresponding American Association of State Highway and Transportation Officials (AASHTO) designations:

ASTM

C150 Specification for Portland Cement (AASHTO M 85)
C595 Specification for Blended Hydraulic Cements (AASHTO M 240)
C618 Specification for Coal Fly Ash and Raw or Calcined Natural Pozzolan for Use in Concrete (AASHTO M 295)
C989 Specification for Ground Granulated Blast-Furnace Slag for Use in Concrete and Mortars (AASHTO M 302)
C1157 Performance Specification for Hydraulic Cement (AASHTO M 240)
C1240 Specification for Silica Fume Used in Cementitious Mixtures (AASHTO M 307)
D558 Moisture-Density (Unit Weight) Relations of Soil-Cement Mixtures (AASHTO T 134)
D1556 Density and Unit Weight of Soil in Place by the Sand-Cone Method (AASHTO T 191)
D2167 Density and Unit Weight of Soil in Place by the Rubber Balloon Method
D2922 Density of Soil and Soil-Aggregate in Place by Nuclear Methods (Shallow Depth) (AASHTO T 310)

3. SUBMITTALS

3.1 Submittal Requirements. The contractor shall submit the following to the engineer at least 30 days before start of any production of CMS:

3.1.1 Certifications. Certifications for portland cement and supplementary cementitious materials as required by the engineer.

3.1.2 Specifications. Manufacturers' data and specifications for equipment including capacities to be used in mixing and compacting CMS.

3.1.3 Proposed CMS Mix Design. If the proposed mix design is developed by the contractor or there is a suggested change to the mix design, it must be submitted to the engineer for approval at least two weeks prior to CMS construction. This mix design shall include details on soil/aggregate gradation, cementitious materials, and required moisture and density to be achieved during compaction.

4. MATERIALS

4.1 Soil/aggregate. "Soil/aggregate" may consist of (1) any combination of gravel, stone, sand, silt, and clay; (2) miscellaneous material such as caliche, scoria, slag, sand shell, cinders, and ash; (3) waste material from aggregate production plants; (4) high-quality crushed stone and gravel base course aggregates; or (5) old flexible Guide to Cement-Modified Soil (CMS) pavements, including the bituminous surface and stone or gravel base course.

The soil/aggregate shall not contain roots, topsoil, or any material deleterious to its reaction with cement. The soil/aggregate as processed for construction shall be such that 100% passes a 1-½-inch sieve and at least 60% passes a No. 4 sieve, exclusive of any gravel or stone retained on the No. 4 sieve.

4.2 Portland Cement. Shall comply with the latest specifications for portland cement (ASTM C150 or AASHTO M 85) or blended hydraulic cements (ASTM C595, ASTM C1157, or AASHTO M 240).

4.3 Water. Shall be free from substances deleterious to the processing of the CMS material.

4.4 Pozzolans. If used, pozzolans including fly ash, slag, and silica fume shall comply with the appropriate specifications (ASTM C618, AASHTO M 295 for fly ash; ASTM C989, AASHTO M 302 for slag; and ASTM C1240, AASHTO M 307 for silica fume).

5. EQUIPMENT

5.1 Description. CMS may be constructed with any machine or combination of machines or equipment that will produce completed CMS material meeting the requirements for gradation, cement and water application, mixing, compacting, finishing, and curing as provided in these specifications.

5.2 Mixing Methods. Mixing shall be accomplished in place, using single-shaft or multiple-shaft mixers. Agricultural disks, graders, or other scarifying equipment may be used to initially blend the cement into the soil/aggregate material.

5.3 Cement Proportioning. The cement spreader for in-place mixing shall be capable of uniformly distributing the cement at the specified rate. Cement may be added in a dry or slurry form. If applied in slurry form, the slurry mixer and spreading equipment shall be capable of completely dispersing the cement and water and maintaining a uniform, consistent slurry without separation throughout the slurry placement.

5.4 Application of Water. Water may be applied through the mixer or with water trucks equipped with pressure-spray bars.

5.5 Compaction. The processed material shall be compacted with one or a combination of the following: tamping or grid roller, pneumatic-tire roller, steel-wheel roller, vibratory roller, or vibrating-plate compactor.

6. CONSTRUCTION REQUIREMENTS

6.1 General

6.1.1 Preparation. Before CMS processing begins, the area to be mixed shall be graded and shaped to lines and grades as shown in the plans or as directed by the engineer. During this process, any unsuitable material shall be removed and replaced with acceptable material.

6.1.2 Mixing. CMS material shall not be mixed when the soil/aggregate is frozen, or when the air temperature is below 40°F.

6.2 Processing

6.2.1 Preparation. The surface of the soil/aggregate to be processed into CMS shall be at an elevation so that, when mixed with cement and water and re-compacted to the required density, the final elevation will be as shown in the plans or as directed by the engineer. The material in place and surface conditions shall be approved by the engineer before the next phase of construction is begun.

6.2.2 Pulverization. Before cement is applied, initial pulverization or scarification may be required to the full depth of mixing.

For cohesive soils with a plasticity index greater than 20, the soil/aggregate shall be damp at the time of pulverizing to reduce dust and aid in processing.

For slurry application of cement, initial pulverization shall be performed to provide a method to uniformly distribute the slurry over the soil/aggregate material.

6.2.3 Application of Cement. The specified quantity of cement shall be applied uniformly in a manner that minimizes dust, runoff, and ponding, and is satisfactory to the engineer.

6.2.4 Mixing. Mixing shall begin as soon as possible after the cement has been spread and shall continue until a uniform mixture is produced. The final mixture shall be pulverized such that 100% passes the 1-½-inch sieve and at least 60% passes the No. 4 sieve, exclusive of any gravel or stone retained on the No. 4 sieve.

The final pulverization test shall be made at the conclusion of mixing operations. Mixing shall be continued until the product is uniform in color, meets gradation requirements, and is at a moisture content that allows compaction to the required density. The entire operation of cement spreading, water application, and mixing shall result in a uniform soil/aggregate, cement, and water mixture for the full design depth and width.

6.3 Compaction. CMS material shall be uniformly compacted to a minimum of 98% of maximum dry density based on a moving average of five consecutive tests with no individual test below 96%. Field density of compacted CMS material can be determined by the 1) nuclear method in the direct transmission mode (ASTM D2922, AASHTO T 310); 2) sand cone method (ASTM D1556, AASHTO T 191); or 3) rubber balloon method (ASTM D2167). Optimum moisture and maximum dry density shall be determined prior to start of construction and also in the field prior to and during construction by a moisture-density test (ASTM D558 or AASHTO T 134).

6.4 Finishing. As compaction nears completion, the surface of the CMS shall be shaped to the specified lines, grades, and cross sections. Compaction shall then be continued until uniform and adequate density is obtained. Compaction and finishing shall be done in such a manner as to produce a dense surface free of compaction planes, cracks, ridges, or loose material.

6.5 Curing. Finished portions of CMS that are traveled on by equipment used in constructing an adjoining section shall be protected in such a manner as to prevent equipment from damaging completed work.

If required by the engineer, after completion of final finishing, the surface may be moist-cured with a fog-type water spray.

6.6 Traffic. Completed portions of CMS can be opened immediately to construction equipment provided any moist curing operations are not impaired.

6.7 Covering. Subsequent subbase and base layers can be placed any time after finishing, as long as the CMS is sufficiently stable to support the required construction equipment without marring or permanent distortion of the surface.

6.8 Maintenance. The contractor shall maintain the CMS material in good condition until all work is completed and accepted. Such maintenance shall be done by the contractor at his own expense.

Maintenance shall include immediate repairs of any defects that may occur. If it is necessary to replace any processed material, the replacement shall be for the full depth, with vertical cuts, using fresh CMS material.

7. INSPECTION AND TESTING

7.1 Description. The engineer, with the assistance and cooperation of the contractor, shall make such inspections and tests as deemed necessary to ensure the conformance of the work to the contract documents. These inspections and tests may include, but shall not be limited to:

1. Obtaining test samples of the CMS material and its individual components at all stages of processing and after completion.

2. Observing the operation of all equipment used on the work. Only those materials, machines, and methods meeting the requirements of the contract documents shall be used unless otherwise approved by the engineer.

All testing of processed material or its individual components, unless otherwise provided specifically in the contract documents, shall be in accordance with the latest applicable ASTM or AASHTO specifications in effect as of the date of advertisement for bids on the project.

8. MEASUREMENT AND PAYMENT

8.1 Measurement. This work will be measured:

1. In square yards of completed and accepted CMS material as determined by the specified lines, grades, and cross sections shown on the plans.

2. In tons or cwt of cement incorporated into the CMS material in accordance with the instructions of the engineer.

8.2 Payment. This work will be paid for at the contract unit price per square yard of CMS material and at the contract unit price per ton or cwt of cement furnished, multiplied by the quantities obtained in accordance with Section 8.1. Such payment shall constitute full reimbursement for all work necessary to complete the CMS material, including watering, curing, inspection and testing assistance, and all other incidental operations.

APPENDIX C
PLAN SUBMITTAL CHECKLISTS AND GUIDELINES

Final Plat Checklist

1. GENERAL INFORMATION

    a. All plans shall conform to the requirements set forth in this portion of the Design Manual. Latest versions of the guidelines are available on the City of Maricopa web site.

    b. Any deviation from these requirements requires prior approval of the City Engineer.

2. GENERAL PLAN REQUIREMENTS

    All Construction or Improvement Plans shall be prepared per the following, but not limited to:

    a. Plans submitted for review shall have the appropriate professional (State of Arizona) seal, signature, registration expiration date and date of signature on each sheet.

    b. Plans shall be prepared on 24-inch by 36-inch (24" x 36") size plan sheets.

    c. All plan sheets shall include a 2-inch border on the left side for binding. A minimum of one-half inch border shall be provided on the remaining three sides of the plan sheet.

    d. All plans shall be bound or stapled in appropriate sets prior to submittal.

    e. All plan sheets in a set of plans shall be numbered in sequence.

    f. All plan sheets in a set of plans shall contain a "revisions" block.

    g. All plan sheets in a set of plans shall be dated. The date on a plan sheet will be revised for subsequent submittals.

    h. All plans shall be submitted as black-line prints.

3. FINAL PLAT REQUIREMENTS

The following are the requirements for the initial final plat submittal to the City.

FINAL PLAT – RESIDENTIAL		
Copies	✓	Item
1		Application
5		Final Plat (24"x36")
4		PAD/Zoning Conditions (Stipulations)
4		Approved Preliminary Plat (24” x 36”)
4		Preliminary Plat Approval and Stipulations from Council
1		Final Plat PMT (8 ½” x 11”)
2		Title Report(s) - including all Schedule B items (no older than 60 days or as current as title bank search is available)
3		ALTA Survey (no older than 90 days)
2		Boundary Closure Calculations
3		Final Drainage Report
2		Water Analysis Report
2		Sewer Analysis Report
2		Geotechnical/Soils Report
2		Traffic Impact Analysis/Traffic Study
3		CC&R’s/Deed Restrictions/HOA or POA including Design Guidelines
FEE		$800 +$20/lot/tract/unit PLUS plan review fees

IMPROVEMENT PLANS (FULL SIZE 24” x 36”)		
Copies	✓	Item
2		Onsite Grading and Drainage
2		Onsite Water and Sewer
3		Offsite Paving/Signing and Striping
4		Offsite Landscaping and Street Lights
1		Owner Authorization
2		Utility Will Serve Letter
1		Construction Estimate
2		Assured Water Supply

FINAL PLAT - COMMERCIAL		
Copies	✓	Item
1		Electronic Final of Plat (.dwg format)
1		Application
4		Final Plat (24"x36")
4		Site Plan Approval and Stipulations (from Planning)
1		Final Plat PMT (8 ½ x 11)
2		Title Report(s) - including all Schedule B items (no older than 60 days or as current as title bank search is available)
4		ALTA Survey (no older than 90 days)
1		Boundary Closure Calculations
2		Final Drainage Report
2		Water Analysis Report
2		Sewer Analysis Report
3		Geotechnical/Soils Report
3		Traffic Impact Analysis/Traffic Study
3		CC&R's/Deed Restrictions/HOA or POA including Design Guidelines
FEE		$800 +$20/lot/tract/unit PLUS plan review fees

IMPROVEMENT PLANS (FULL SIZE 24" x 36")		
Copies	✓	Item
3		Onsite Grading and Drainage
3		Onsite Water and Sewer
3		Offsite Paving/Signing and Striping/Street Light
3		Offsite Landscaping
1		Owner Authorization
2		Utility Will Serve Letter
1		Construction Estimate
2		Assured Water Supply

a. First Submittal Requirements:

   i. Current Title Report with the following requirements:

      1. No older than sixty (60) days (or as current as the title research bank)

      2. A copy of all items listed in Schedule B pertaining to Easements; ROW; and Covenants, Conditions, and Restrictions are required.

      3. Copies of any other Schedule B items requested by the City of Maricopa shall be submitted.

      4. The Title Report shall include a legal description, Schedule B, that includes all land being platted and must include all adjacent street ROW to the monument lines.

      5. The Title Report must disclose all holders of rights, title or interest in all existing wells within the platted boundary of this Subdivision.

      6. The Report must be on the **current condition of Title** <u>not as it will exist after the Final Plat is recorded.</u>

   ii. ALTA Survey Map (no older than 90 days)

   iii. Copy of the Approved Preliminary Plat and Stipulations

   iv. Copy of the Tentative Covenants, Conditions, and Restrictions (CC&R's)

   v. Subdivision boundary closure calculations

   vi. Closure calculations for all Tracts, Parcels, and Lots

b. The Final Plat shall be submitted on 24" x 36" sheets bound or stapled in sets.

c. The minimum allowable scale is 1" = 100'. The scale must be noted on each sheet.

d. The minimum height of all text, numbering, and lettering shall be 0.11" (11 point type) as required by ARS 11-481.

e. All official seals and stamps affixed to the Final Plat must be in black ink as required by the Pinal County Recorder's Office. **All signatures, seals, and notary stamps must be in black ink.**

f. Cover Sheet Requirements:

   i. The name of the proposed subdivision or development must be shown on the title block of the cover sheet.

ii. The legal description (Section, Township, Range, Principle Meridian, County, and State) must be shown in the Title Block on the cover sheet of the Plat as required by State Law.

iii. Include the total area in square feet (gross and net) of the project on the cover sheet.

iv. If the subdivision is located in part, or in total, over a previously recorded plat, the appropriate record reference, i.e., plat name and Pinal County Recorder recordation information, must be included in the Title Block on cover the sheet and on the map sheet of the Plat.

v. The Developer's name, address and phone number must be shown on the cover sheet.

vi. The name of the Owner of Record, address and phone number must be shown on the cover sheet.

vii. The following certification and the name, address, and registration number of the Registered Land Surveyor preparing the Final Plat must be shown on the cover sheet

CERTIFICATION:
THIS IS TO CERTIFY THAT THIS PLAT IS CORRECT AND ACCURATE AND THE MONUMENTS DESCRIBED HEREIN HAVE EITHER BEEN SET OR LOCATED AS DESCRIBED TO THE BEST OF MY KNOWLEDGE AND BELIEF.

REGISTERED LAND SURVEYOR DATE
Name
Street Address
City, State, Zip Code
(SEAL)

viii. One of the following certifications must be shown on the cover sheet, as applicable:

(Owner's Name) HAS RECEIVED A CERTIFICATE OF ASSURED WATER SUPPLY FOR THIS SUBDIVISION PURSUANT TO A.R.S. 45-576, AND SUBMITS SAID CERTIFICATE WITH THIS PLAT.

OR

THIS SUBDIVISION IS WITHIN THE SERVICE AREA OF (NAME OF WATER SUPPLIER) WHICH HAS BEEN DESIGNATED AS HAVING AN ASSURED WATER SUPPLY PURSUANT TO A.R.S. 45-576. A COMMITMENT TO SUPPLY WATER SERVICE TO THIS PLATTED SUBDIVISION HAS BEEN RECEIVED FROM SAID COMPANY AS EVIDENCED BY _____, A COPY OF WHICH IS SUBMITTED WITH THIS PLAT.

ix. A Vicinity Map shall be provided on the cover sheet. The applicable City , Pinal County, State Ak-Chin Indian Community and Gila River Indian Community limits must be labeled, if applicable, wherever the project site abuts land that has not been incorporated by the City of Maricopa. The Vicinity Map shall include all adjacent roads, streets, or highways and a north arrow.

x. An Index Map with the following information is required on the cover sheet:

1. Street Names
2. Lot, Tract and Parcel Numbers
3. Sheet Numbers and Limits
4. Phase Limits and Numbers if applicable
5. North Arrow

xi. Areas of each tract and parcel shall be shown on the cover sheet of the Plat.

xii. A Legend shall be provided on the cover sheet of the Plat.

xiii. The Basis of Bearing must be described on the cover sheet of the Plat.

xiv. A DEDICATION STATEMENT is required on the cover sheet. The Dedication must include the following:

1. The subdivision location as defined by its Section, Township, Range, County and State.
2. The following statement about all easements shown on the plat:

EASEMENTS ARE DEDICATED AS SHOWN ON THE PLAT.

3. A statement about the ROW dedicated.
4. The following statement about the maintenance of landscaping within the public ROW:

THE MAINTENANCE OF LANDSCAPING WITHIN THE PUBLIC ROW TO BACK OF CURB SHALL BE THE RESPONSIBILITY OF THE HOMEOWNERS' ASSOCIATION OR THE ABUTTING PROPERTY OWNER. ANY DECORATIVE PAVEMENT WITHIN THE ROW MUST ALSO BE MAINTAINED BY THE HOME OWNER'S ASSOCIATION.

5. The following statement about the maintenance of the median landscaping shall be added to the dedication statement:

THE MEDIAN LANDSCAPE WILL BE MAINTAINED BY THE DEVELOPER FOR A PERIOD OF NINETY (90) DAYS FOLLOWING THE PRELIMINARY INSPECTION AND ACCEPTANCE OF THE LANDSCAPING. IF NOT HEALTHY AT THE END OF THE MAINTENANCE PERIOD, THE MAINTENANCE SHALL BE CONTINUED BY THE DEVELOPER UNTIL ACCEPTED BY THE CITY OF MARICOPA.

6. If items are platted as common property with an undivided interest owned in common by each lot owner, a statement about items maintained by the Homeowners' Association:

ALL PROPERTY, AMENITIES AND FACILITIES PROPOSED TO BE MAINTAINED BY THE HOMEOWNERS' ASSOCIATION ARE HEREWITH PLATTED AS COMMON PROPERTY WITH AN UNDIVIDED INTEREST OWNED IN COMMON BY EACH LOT OWNER.

7. If the common property is to be deeded to a Homeowners' Association, the following statement must be included in the Dedication: TRACTS _____, _____, AND _____ (fill in blanks and include all applicable Tracts) ARE NOT DEDICATED TO THE PUBLIC, BUT ARE PLATTED AS COMMON PROPERTY FOR THE USE AND ENJOYMENT OF _____ (HOME OWNERS' ASSOCIATION) AS MORE FULLY SET FORTH IN THE DECLARATION OF COVENANTS, CONDITIONS, AND RESTRICTIONS.

8. If the common property is owned in common, with an undivided interest by all lot owners, the following statement must be included in the Dedication:

TRACTS _____, _____, AND _____ (fill in blanks and include all applicable Tracts) ARE NOT DEDICATED TO THE PUBLIC, BUT ARE PLATTED AS COMMON PROPERTY WITH AN UNDIVIDED INTEREST OWNED IN COMMON BY EACH LOT

OWNER FOR LOT OWNER USE AND ENJOYMENT AS MORE FULLY SET FORTH IN THE DECLARATION OF COVENANTS, CONDITIONS, AND RESTRICTIONS.

9. The Owner, or the person authorized to act on behalf of the Owner, must execute the Dedication Statement. An Acknowledgement Statement by a Notary Public is also required and the following form must be used:

ACKNOWLEDGEMENT:

STATE OF ARIZONA)
) S.S.
COUNTY OF PINAL)

ON THIS _____ DAY OF _____ 20___, BEFORE ME, THE UNDERSIGNED, PERSONALLY APPEARED _____, WHO ACKNOWLEDGED SELF TO BE THE PERSON WHOSE NAME IS SUBSCRIBED TO THE INSTRUMENT WITHIN, AND WHO EXECUTED THE FOREGOING INSTRUMENT FOR THE PURPOSES THEREIN CONTAINED.

IN WITNESS THEREOF, I HAVE HEREUNTO SET MY HAND AND OFFICIAL SEAL.

_____

NOTARY PUBLIC DATE

MY COMMISSION EXPIRES:

_____, 20 _____

xv. If lands to be dedicated are encumbered, a Lien Holder Ratification is required on the cover sheet and all the Holders of each Deed of Trust must sign the Ratification. An Acknowledgement Statement by a Notary Public is also required. The following form must be used:

LIENHOLDER RATIFICATION:

KNOW ALL MEN BY THESE PRESENTS:

THAT THE UNDERSIGNED AS BENEFICIARY OF THAT CERTAIN DEED OF TRUST RECORDED IN DKT, NO. _____, RECORDS OF PINAL COUNTY RECORDER, PINAL COUNTY, ARIZONA, HEREBY RATIFIES, AFFIRMS, AND APPROVES THIS PLAT, THE DECLARATION OF RESTRICTIONS RECORDED CONCURRENTLY HEREWITH, AND EACH AND EVERY DEDICATION CONTAINED HEREIN.

IN WITNESS WHEREOF, THE UNDERSIGNED HAVE SIGNED THEIR NAMES THIS _____DAY oF _____, 20_____.

BY: (Signature of Beneficiary of Deed of Trust as shown in the Title Report)

ITS _____(Title)_____

xvi. An Acknowledgement Statement by a Notary Public is also required for the Lien Holder Ratifications. The following form must be used:

ACKNOWLEDGEMENT:

STATE OF ARIZONA)
) S.S.
COUNTY OF PINAL)

ON THIS _____ DAY OF _____ 20____, BEFORE ME, THE UNDERSIGNED, PERSONALLY APPEARED _____, WHO ACKNOWLEDGED SELF TO BE THE PERSON WHOSE NAME IS SUBSCRIBED TO THE INSTRUMENT WITHIN, AND WHO EXECUTED THE FOREGOING INSTRUMENT FOR THE PURPOSES THEREIN CONTAINED.

IN WHITNESS THEREOF, I HAVE HEREUNTO SET MY HAND AND OFFICIAL SEAL.

_____

NOTARY PUBLIC DATE

MY COMMISSION EXPIRES:

_____, 20 _____

g. Any person signing the Plat who is not an individual owner signing for oneself, must have authorization to act on behalf of the owner, whether the owner is a partnership, corporation or other entity. A certified copy of a Resolution by the Board of Directors that authorizes the individuals signing the plat to act on its behalf, or other signatory evidence must be submitted. Signatory evidence is often contained in the Bylaws of the entity.

h. The following note, if applicable, must be shown on the cover sheet:

ANY STREET DESIGNATED ON THIS PLAT AS A PRIVATE STREET WILL REMAIN PRIVATE AND WILL NOT BECOME ROW OF THE CITY OF MARICOPA.

i. Add the following note to the final plat:

CONSTRUCTION WITHIN UTILITY EASEMENTS SHALL BE LIMITED TO UTILITIES AND DRIVEWAYS.

j. If an easement is dedicated for the exclusive use of water, sanitary sewer, reclaimed water or any combination thereof, the following note must be included on the Plat cover sheet or in the easement to be recorded by Separate Instrument:

ONLY GROUND COVER AND BUSHES ARE ALLOWED TO BE PLANTED WITHIN EASEMENTS DEDICATED FOR THE EXCLUSIVE USE OF WATER, SANITARY SEWER, RECLAIMED WATER OR ANY COMBINATION THEREOF. NO TREES ARE ALLOWED.

k. Add the following note to the final plat:

NO STRUCTURES OR VEGETATION OF ANY KIND THAT WOULD IMPEDE THE FLOW OF WATER THROUGH THE EASEMENTS MAY BE CONSTRUCTED, PLANTED OR ALLOWED TO GROW WITHIN DRAINAGE EASEMENTS.

l. Add the following note regarding Visibility Restrictions:

VISIBILITY EASEMENT RESTRICTIONS: ANY OBJECT, WALL, STRUCTURE, MOUND, OR LANDSCAPING (MATURE) ETC. OR COMBINATION EXCEEDING 24 INCHES IN HEIGHT (MEASURED FROM ADJACENT TOP OF CURB OR SIDEWALK) IS NOT ALLOWED WITHIN THE VISIBILITY EASEMENT.

m. If the Common Property is to be Deeded to a Homeowners' Association, add the following note:

ALL TRACTS THAT WILL NOT BE DEDICATED TO THE CITY OF MARICOPA AND ALL COMMON PROPERTY SHALL BE IMPROVED IN ACCORDANCE WITH PLANS APPROVED BY THE CITY OF MARICOPA AND SHALL BE CONVEYED BY WARRANTY (OR SPECIAL WARRANTY) DEED TO THE HOME OWNERS' ASSOCIATION. THE HOMEOWNERS' ASSOCIATION SHALL BE RESPONSIBLE FOR THE MAINTENANCE OF THE COMMON PROPERTY.

n. If the common property is owned in common, with an undivided interest by all lot owners, add the following note:

All Tracts that will not be dedicated to the City of Maricopa and all common property shall be improved in accordance with plans approved by the City of Maricopa and shall be owned in common, with an undivided interest by all Lot Owners in this subdivision. The common property shall be included within the scope of deeds transferring ownership of lots in this subdivision. The Lot Owners shall be responsible for the maintenance of the common property.

Grading and Drainage Plans Checklist

1. GENERAL INFORMATION

    a. All plans shall conform to the requirements set forth in this portion of the Design Manual. Latest versions of the guidelines are available on the City of Maricopa web site.

    b. Any deviation from these requirements requires prior approval of the City Engineer.

2. GENERAL PLAN REQUIREMENTS

    All Construction or Improvement Plans shall be prepared per the following, but not limited to:

    a. Plans submitted for review shall have the appropriate professional (State of Arizona) seal, signature, registration expiration date and date of signature on each sheet.

    b. Plans shall be prepared on 24-inch by 36-inch (24" x 36") size plan sheets.

    c. All plan sheets shall include a 2-inch border on the left side for binding. A minimum of one-half inch border shall be provided on the remaining three sides of the plan sheet.

    d. All plans shall be bound or stapled in appropriate sets prior to submittal.

    e. All plan sheets in a set of plans shall be numbered in sequence.

    f. All plan sheets in a set of plans shall contain a "revisions" block.

    g. All plan sheets in a set of plans shall be dated. The date on a plan sheet will be revised for subsequent submittals.

    h. All plans shall be submitted as black-line prints.

3. DRAFTING STANDARDS FOR IMPROVEMENT PLANS

    a. The minimum size of all lettering, and numerical data on a Plan Sheet shall be 0.10 (1/10) inch.

    b. All lettering, text, and numerical data on a plan sheet shall be readable from the bottom or right side of the sheet.

    c. Text should never be upside down.

    d. All line work, text, lettering, and symbols on a plan sheet shall be of a quality, density, and clarity such that all information contained on the plan sheet is readable on half-scale or half-sized plan sets.

e. All plan sheets containing drawings shall contain an appropriate north arrow, bar scale, and text scale.

f. All plan sheets containing drawings shall be oriented so that the north arrow points to the top or to the right side of the sheet.

g. All stationing shall be oriented to increase from the left side of the sheet to the right side of the sheet and from the bottom of the sheet to the top of the sheet.

h. Intersections shall not be cut by match lines and shall be complete from BCR to ECR on the same sheet. When intersecting streets are to be improved beyond ends of curb returns, additional plan and profile sheet are required. The intersections at the beginning and end of the project shall be fully shown.

i. Bearings, distances and stationing shall be shown on all street centerlines. Stationing numbers should be chosen to prevent 'negative' stationing. The project need not begin at 0+00. Sewer stationing is from manhole to manhole on each line segment starting from the downstream manhole.

j. Curve data shall be shown on the same sheet as the curve.

k. On streets that are not centered on the monument line, the stationing shall be along the construction centerline, which shall also be the crown line, unless super elevations or other conditions dictate otherwise. On such streets the ROW will be measured from the monument line. The offsets shown for new construction shall be from the construction centerline. Every attempt should be made to have the section centerline and the monument line to be the same line with the same bearing.

l. Plans should not contain shading but can use hatching or other means of delineating areas that do not include shading.

m. The minimum acceptable scale of the plans shall be per the following table:

TYPE OF PLANS	HORIZONTAL SCALE	VERTICAL SCALE
Grading and Drainage Plans	1 inch = 40 feet	1 inch = 2 feet

* Typically, on all one plan set unless otherwise approved by City Staff

4. COVER SHEET STANDARD REQUIREMENTS

a. Title: Include the name of the project and the content of the plan set.

b. City Name: Below the title, include the words, 'City of Maricopa, Arizona'

c. Vicinity Map: At a minimum, locate the project relative to two intersecting arterial streets

d. Sheet Index

e. Key Map: On multiple sheet plans

f. Basis of Bearing: Must be in reference to a Pinal County recorded document

g. Legal Description: Provide Section, Township, Range and County. If site is located in a recorded subdivision plat, include subdivision name, lot number(s) and Pinal County recordation information.

h. Benchmark: Reference all elevations shown on the plans to an approved CITY OF MARICOPA benchmark. If the site is more than one-half mile from the nearest benchmark, show a temporary benchmark.

i. FEMA Block: Include Flood Plain information for site, including FIRM panel information and date of Flood Plain Map. Sites that are within A or B prefix flood plain designations will require submittal, review and approval to Pinal County Public Works Flood Control District prior to approval by CITY OF MARICOPA.

j. City of Maricopa Applicable Standard Plan Notes (General Notes, Grading and Drainage Notes, Paving Notes)

k. Utility Systems Notes: water, sewer, power, etc.

l. Utility Systems Ownerships: Including both dry and wet utilities

m. Approval Blocks: City Engineer, Fire Department, ADEQ, Global Water, Pinal County Public Works Flood Control District, etc. Include any necessary entity that will require approval prior to the issuance of permits.

n. Responsible Party Information: Owner, Engineer, Architect and Developer company names, contact persons, addresses and telephone and/or fax numbers.

o. Legend: For symbols, non-standard abbreviations, etc.

p. 'Blue Stake' Note: Required on all plans that include excavation of any type.

q. Tabulation of Quantities

r. Cut and Fill Quantities: Required for permit fee calculation.

s. Overall Utility Plan Shows: (key map)

    i. Sewer line with manholes

    ii. Water lines including fire hydrants

    iii. Streetlights

    iv. United States Postal Service cluster mail boxes

t. Supplemental Cover Sheet (Sheet 2 of the Plans)

i. Due to the limitations or area constraints on the Cover Sheet of the Plans, the City of Maricopa Standard Plan Notes may be put on a Supplemental Cover Sheet, or Sheet 2, of the plan set.

ii. This Supplemental Cover Sheet may also be used to include other Standard Notes, such as the water and sewer in the applicable plan sets.

u. Approval Blocks.

5. GRADING AND DRAINAGE PLAN REQUIREMENTS

a. The first submittal of the Grading and Drainage plans shall include, at a minimum, the following items:

i. Final Drainage Report covering the entire development

ii. Geotechnical or Soils report the for site

iii. Percolation test results will be included as part of the review process. After drywell installation, a constant head pressure test must be completed on at least one drywell in each basin to obtain an accurate percolation rate and determine if an additional drywell is required.

iv. The Grading and Drainage Plans must encompass the entire parcel or development. All lots, tracts, and retention basins must be shown in their entirety. Phase limits and numbers, if applicable, must be shown on each applicable sheet.

v. Include a legend on the detail sheet for all symbols used on the grading plans.

vi. Detailed typical street sections shall be shown on a separate detail sheet.

b. The following blocks are required on the Cover sheet. See 'General Plan Requirements' for Cover sheet and general requirements:

i. City Engineer Approval
ii. Grading/Drainage Certification Block
iii. As-built Certification Block

GRADE CERTIFICATION:

This is to certify that this grading plan is in compliance with the grade requirements of the Soils Report prepared by:

_____

Geotechnical Firm Date

_____

Registered Civil Engineer Date

c. When temporary retention basins or storm drainage facilities are present or proposed, the following note must be shown on the cover sheet:

THE EXISTING OR PROPOSED TEMPORARY RETENTION AND/OR DRAINAGE FACILITIES LOCATED WITHIN THE AREA OF THIS DEVELOPMENT WILL NOT BE REMOVED FROM SERVICE UNTIL THE PERMANENT RETENTION AND DRAINAGE FACILITIES ARE FUNCTIONAL.

d. General Information Required on the Plan Sheets:

   i. Show all existing and proposed storm drainage facilities, such as retention basins, catch basins, scuppers, curb and gutter and storm drain pipes, on the grading plans and identified by type and size. The designation of the facilities and structures shall match the designations used in the Drainage Report.

   ii. Show the existing topography by contours. Spot elevations are required when the subdivision's topography cannot be clearly defined by contours. Sufficient spot elevations are required immediately off-site, adjacent to the subdivision boundary within a 50-foot buffer, to provide an adequate analysis of grade differentials and drainage.

   iii. Spot elevations must be shown for all existing curb and gutter adjacent to the development. Spot elevations must be shown adjacent to each property corner, at all grade breaks, and at all scuppers/catch basins.

   iv. Cross-sections must be shown across the development's property line boundaries.

   v. The following proposed elevations must be shown for each lot:

      1. Lot corners
      2. Finished pad
      3. Finished floor

e. All existing and proposed block site perimeter walls on or adjacent to subdivision boundaries and retention basin perimeters must be shown on the plans, with top of wall elevations and finished grade elevations, on both sides of the walls at all critical points.

f. The lot grading detail must be adequately sloped to prevent storm water from ponding on the lot. The minimum allowable slope from the back of lot to the front of lot is 2%, unless prior approval is obtained from the City Engineer.

g. Cross-sections must be shown for all retention basins showing: the elevations of the top of slope, the bottom of basin, the high-water elevation, and the side slope. The maximum allowable depth of ponding in the basin is three (3) feet. The maximum allowable side slope is 4:1. Any deviation from the requirements must have prior approval from the City Engineer.

h. No portion of a retention basin shall encroach within the street ROW or the PUE.

i. The grading plan of all retention basins must show:
   i. The tract number or designation
   ii. The same retention basins as shown in the drainage report.
   iii. Contours shall be one (1) foot elevations.
   iv. The dimensioned location of all drywells with grate elevation shall be shown:
   v. The design 100-year, 2-hour storm high water elevation with one (1) foot of freeboard must be shown.

j. All drywells, shall be the double chamber type, consisting of an interceptor chamber and a settling chamber.

k. Show the outfall elevation and location for all basins.

l. Show the outfall elevation and location for the entire development.

m. Show volume required and provided for each basin per the final drainage report.

n. Show construction detail, cross-sections and/or profiles for all proposed drainage facilities such as:

   i. Drainage swales with grade and spot elevations at least every fifty (50) feet
   ii. Storm drain lines with profiles showing hydraulic grade lines.
   iii. Catch basins and connector pipes including profile and hydraulic grade line.
   iv. Scuppers and spillways showing a longitudinal section with elevations and slopes at the full width of the street, scupper, guardrail, spillway, bottom of the retention basin, and end of the erosion protection. The design high water elevation must be noted on the spillway at the appropriate location.
   v. Retention basins (cross-sections must be “to-scale” both horizontally and vertically)

Landscape and Irrigation Plans Checklist

1. GENERAL INFORMATION

    a. All plans shall conform to the requirements set forth in this portion of the Design Manual. Latest versions of the guidelines are available on the City of Maricopa web site.

    b. Any deviation from these requirements requires prior approval of the City Engineer.

2. GENERAL PLAN REQUIREMENTS

    All Construction or Improvement Plans shall be prepared per the following, but not limited to:

    a. Plans submitted for review shall have the appropriate professional (State of Arizona) seal, signature, registration expiration date and date of signature on each sheet.

    b. Plans shall be prepared on 24-inch by 36-inch (24" x 36") size plan sheets.

    c. All plan sheets shall include a 2-inch border on the left side for binding. A minimum of one-half inch border shall be provided on the remaining three sides of the plan sheet.

    d. All plans shall be bound or stapled in appropriate sets prior to submittal.

    e. All plan sheets in a set of plans shall be numbered in sequence.

    f. All plan sheets in a set of plans shall contain a "revisions" block.

    g. All plan sheets in a set of plans shall be dated. The date on a plan sheet will be revised for subsequent submittals.

    h. All plans shall be submitted as black-line prints.

3. DRAFTING STANDARDS FOR IMPROVEMENT PLANS

    a. The minimum size of all lettering, and numerical data on a Plan Sheet shall be 0.10 (1/10) inch.

    b. All lettering, text, and numerical data on a plan sheet shall be readable from the bottom or right side of the sheet.

    c. Text should never be upside down.

    d. All line work, text, lettering, and symbols on a plan sheet shall be of a quality, density, and clarity such that all information contained on the plan sheet is readable on half-scale or half-sized plan sets.

e. All plan sheets containing drawings shall contain an appropriate north arrow, bar scale, and text scale.

f. All plan sheets containing drawings shall be oriented so that the north arrow points to the top or to the right side of the sheet.

g. All stationing shall be oriented to increase from the left side of the sheet to the right side of the sheet and from the bottom of the sheet to the top of the sheet.

h. Intersections shall not be cut by match lines and shall be complete from BCR to ECR on the same sheet. When intersecting streets are to be improved beyond ends of curb returns, additional plan and profile sheet are required. The intersections at the beginning and end of the project shall be fully shown.

i. Bearings, distances and stationing shall be shown on all street centerlines. Stationing numbers should be chosen to prevent 'negative' stationing. The project need not begin at 0+00. Sewer stationing is from manhole to manhole on each line segment starting from the downstream manhole.

j. Curve data shall be shown on the same sheet as the curve.

k. On streets that are not centered on the monument line, the stationing shall be along the construction centerline, which shall also be the crown line, unless super elevations or other conditions dictate otherwise. On such streets the ROW will be measured from the monument line. The offsets shown for new construction shall be from the construction centerline. Every attempt should be made to have the section centerline and the monument line to be the same line with the same bearing.

l. Plans should not contain shading but can use hatching or other means of delineating areas that do not include shading.

m. The minimum acceptable scale of the plans shall be per the following table:

TYPE OF PLANS	HORIZONTAL SCALE	VERTICAL SCALE
Landscape and Irrigation Plans*	1 inch = 20 feet	1 inch = 4 feet

* Typically, on all one plan set unless otherwise approved by City Staff

4. COVER SHEET STANDARD REQUIREMENTS

a. Title: Include the name of the project and the content of the plan set.

b. City Name: Below the title, include the words, 'City of Maricopa, Arizona'

c. Vicinity Map: At a minimum, locate the project relative to two intersecting arterial streets

d. Sheet Index

e. Key Map: On multiple sheet plans

f. Basis of Bearing: Must be in reference to a Pinal County recorded document

g. Legal Description: Provide Section, Township, Range and County. If site is located in a recorded subdivision plat, include subdivision name, lot number(s) and Pinal County recordation information.

h. Benchmark: Reference all elevations shown on the plans to an approved CITY OF MARICOPA benchmark. If the site is more than one-half mile from the nearest benchmark, show a temporary benchmark.

i. FEMA Block: Include Flood Plain information for site, including FIRM panel information and date of Flood Plain Map. Sites that are within A or B prefix flood plain designations will require submittal, review and approval to Pinal County Public Works Flood Control District prior to approval by CITY OF MARICOPA.

j. City of Maricopa Applicable Standard Plan Notes (General Notes, Grading and Drainage Notes, Paving Notes)

k. Utility Systems Notes: water, sewer, power, etc.

l. Utility Systems Ownerships: Including both dry and wet utilities

m. Approval Blocks: City Engineer, Fire Department, ADEQ, Global Water, Pinal County Public Works Flood Control District, etc. Include any necessary entity that will require approval prior to the issuance of permits.

n. Responsible Party Information: Owner, Engineer, Architect and Developer company names, contact persons, addresses and telephone and/or fax numbers.

o. Legend: For symbols, non-standard abbreviations, etc.

p. 'Blue Stake' Note: Required on all plans that include excavation of any type.

q. Tabulation of Quantities

r. Cut and Fill Quantities: Required for permit fee calculation.

s. Overall Utility Plan Shows: (key map)

    i. Sewer line with manholes

    ii. Water lines including fire hydrants

    iii. Streetlights

    iv. United States Postal Service cluster mail boxes

t. Supplemental Cover Sheet (Sheet 2 of the Plans)

i. Due to the limitations or area constraints on the Cover Sheet of the Plans, the City of Maricopa Standard Plan Notes may be put on a Supplemental Cover Sheet, or Sheet 2, of the plan set.

ii. This Supplemental Cover Sheet may also be used to include other Standard Notes, such as the water and sewer in the applicable plan sets.

u. Approval Blocks.

Paving Plans Checklist

1. GENERAL INFORMATION

    a. All plans shall conform to the requirements set forth in this portion of the Design Manual. Latest versions of the guidelines are available on the City of Maricopa web site.

    b. Any deviation from these requirements requires prior approval of the City Engineer.

2. GENERAL PLAN REQUIREMENTS

    All Construction or Improvement Plans shall be prepared per the following, but not limited to:

    a. Plans submitted for review shall have the appropriate professional (State of Arizona) seal, signature, registration expiration date and date of signature on each sheet.

    b. Plans shall be prepared on 24-inch by 36-inch (24" x 36") size plan sheets.

    c. All plan sheets shall include a 2-inch border on the left side for binding. A minimum of one-half inch border shall be provided on the remaining three sides of the plan sheet.

    d. All plans shall be bound or stapled in appropriate sets prior to submittal.

    e. All plan sheets in a set of plans shall be numbered in sequence.

    f. All plan sheets in a set of plans shall contain a "revisions" block.

    g. All plan sheets in a set of plans shall be dated. The date on a plan sheet will be revised for subsequent submittals.

    h. All plans shall be submitted as black-line prints.

3. DRAFTING STANDARDS FOR IMPROVEMENT PLANS

    a. The minimum size of all lettering, and numerical data on a Plan Sheet shall be 0.10 (1/10) inch.

    b. All lettering, text, and numerical data on a plan sheet shall be readable from the bottom or right side of the sheet.

    c. Text should never be upside down.

    d. All line work, text, lettering, and symbols on a plan sheet shall be of a quality, density, and clarity such that all information contained on the plan sheet is readable on half-scale or half-sized plan sets.

e. All plan sheets containing drawings shall contain an appropriate north arrow, bar scale, and text scale.

f. All plan sheets containing drawings shall be oriented so that the north arrow points to the top or to the right side of the sheet.

g. All stationing shall be oriented to increase from the left side of the sheet to the right side of the sheet and from the bottom of the sheet to the top of the sheet.

h. Intersections shall not be cut by match lines and shall be complete from BCR to ECR on the same sheet. When intersecting streets are to be improved beyond ends of curb returns, additional plan and profile sheet are required. The intersections at the beginning and end of the project shall be fully shown.

i. Bearings, distances and stationing shall be shown on all street centerlines. Stationing numbers should be chosen to prevent 'negative' stationing. The project need not begin at 0+00. Sewer stationing is from manhole to manhole on each line segment starting from the downstream manhole.

j. Curve data shall be shown on the same sheet as the curve.

k. On streets that are not centered on the monument line, the stationing shall be along the construction centerline, which shall also be the crown line, unless super elevations or other conditions dictate otherwise. On such streets the ROW will be measured from the monument line. The offsets shown for new construction shall be from the construction centerline. Every attempt should be made to have the section centerline and the monument line to be the same line with the same bearing.

l. Plans should not contain shading but can use hatching or other means of delineating areas that do not include shading.

m. The minimum acceptable scale of the plans shall be per the following table:

TYPE OF PLANS	HORIZONTAL SCALE	VERTICAL SCALE
Paving and Storm Drain Plans*	1 inch = 20 feet	1 inch = 4 feet

* Typically, on all one plan set unless otherwise approved by City Staff

4. COVER SHEET STANDARD REQUIREMENTS

a. Title: Include the name of the project and the content of the plan set.

b. City Name: Below the title, include the words, 'City of Maricopa, Arizona'

c. Vicinity Map: At a minimum, locate the project relative to two intersecting arterial streets

d. Sheet Index

e. Key Map: On multiple sheet plans

f. Basis of Bearing: Must be in reference to a Pinal County recorded document

g. Legal Description: Provide Section, Township, Range and County. If site is located in a recorded subdivision plat, include subdivision name, lot number(s) and Pinal County recordation information.

h. Benchmark: Reference all elevations shown on the plans to an approved CITY OF MARICOPA benchmark. If the site is more than one-half mile from the nearest benchmark, show a temporary benchmark.

i. FEMA Block: Include Flood Plain information for site, including FIRM panel information and date of Flood Plain Map. Sites that are within A or B prefix flood plain designations will require submittal, review and approval to Pinal County Public Works Flood Control District prior to approval by CITY OF MARICOPA.

j. City of Maricopa Applicable Standard Plan Notes (General Notes, Grading and Drainage Notes, Paving Notes)

k. Utility Systems Notes: water, sewer, power, etc.

l. Utility Systems Ownerships: Including both dry and wet utilities

m. Approval Blocks: City Engineer, Fire Department, ADEQ, Global Water, Pinal County Public Works Flood Control District, etc. Include any necessary entity that will require approval prior to the issuance of permits.

n. Responsible Party Information: Owner, Engineer, Architect and Developer company names, contact persons, addresses and telephone and/or fax numbers.

o. Legend: For symbols, non-standard abbreviations, etc.

p. 'Blue Stake' Note: Required on all plans that include excavation of any type.

q. Tabulation of Quantities

r. Cut and Fill Quantities: Required for permit fee calculation.

s. Overall Utility Plan Shows: (key map)

    i. Sewer line with manholes

    ii. Water lines including fire hydrants

    iii. Streetlights

    iv. United States Postal Service cluster mail boxes

t. Supplemental Cover Sheet (Sheet 2 of the Plans)

i. Due to the limitations or area constraints on the Cover Sheet of the Plans, the City of Maricopa Standard Plan Notes may be put on a Supplemental Cover Sheet, or Sheet 2, of the plan set.

ii. This Supplemental Cover Sheet may also be used to include other Standard Notes, such as the water and sewer in the applicable plan sets.

u. Approval Blocks.

5. PAVING PLAN REQUIREMENTS

a. The first submittal of the Paving Plans shall include:

A GEOTECHNICAL/ SOILS REPORT CONTAINING, AT A MINIMUM, ATTERBURG LIMITS TEST RESULTS, SIEVE ANALYSIS AND GRADATION TEST RESULTS, AND SWELL TEST RESULTS. THE REPORT MUST INCLUDE PAVEMENT SECTION RECOMMENDATION FOR ALL STREETS.

b. All elevations shown on the plan must be referenced to an approved Benchmark or Temporary Benchmark established by the Engineer.

c. Typical sections for each street to be improved must be shown on the detail sheet with dimensions. The sections must include the following:

i. ROW width
ii. Width of sidewalk
iii. Width of improved surface
iv. Type and size of curb and gutter, i.e. roll or vertical
v. Pavement cross section
vi. Label all easements
vii. Minimum pavement cross slope (Inverted crowns not allowed)
viii. Street names

d. The following utility reference items must be shown on each sheet:

i. All existing and proposed wet utilities must be shown in plan view
ii. Utility crossings must be shown in profile view
iii. All manhole and valve box adjustments must be noted on the plan view with appropriate MAG detail or utility company detail called out

e. The following design items must be shown on each sheet in plan view with all applicable dimensions and standard detail identification:

i. Existing and proposed ROW
ii. Existing and proposed roadway section (B/C to B/C)
iii. Existing and proposed curbs including curb type
iv. Existing and proposed sidewalks with width dimensioned

v. Existing and proposed pavement section with width dimensioned
vi. Existing and proposed ADA compliant sidewalk ramps (MAG STD DTL 236-238)
vii. Curb transitions with standard detail called out
viii. Valley gutters at all locations where storm water will cross the street, with width and MAG STD DTL noted
    1. local residential intersections – 3 foot wide
    2. collector intersections- 6 foot wide
    3. arterial intersections- 8 foot wide

ix. Proposed sidewalk ramps at mid-block or other locations, if applicable (MAG STD DTL 238-1 thru 3)
x. Survey monuments, MAG STD DTL 120, and type
xi. Utility and other conduits with depths
xii. All existing site facilities, features 'to be protected in place' must be noted
xiii. All existing water wells within the ROW must be shown on the plan with their Department of Water Resources registration number. If not registered, so note on the plans.
xiv. Sight distance/visibility easement
xv. City limits where applicable
xvi. Label street names
xvii. Cross-reference adjacent improvement plans by plan check number
xviii. Conduit crossings including traffic signal and irrigation
xix. Curb return radii per City standards (48 ½ feet F/C ,B/C and 26 feet inside)
xx. Curb radii at cul-de-sacs and 'bubbles' per City standards (48 ½' B/C min. radius)
xxi. Sufficient existing off-site elevations are required, to be shown a minimum of 50 feet beyond the limit of improvements in order to determine grade and direction of slope
xxii. Maximum length of cul-de-sacs shall be 600-feet

f. The following design items must be shown on each profile view as applicable:

i. Existing grade at right and left curb line and centerline
ii. Proposed grade at right and left curb and centerline
iii. Proposed centerline elevation at curb return station on crown run-outs (inverted crowns are not allowed)
iv. The proposed longitudinal grades must be labeled. The longitudinal grades on curves must be computed based on their true lengths. Longitudinal grades must be 0.30% minimum.
v. Storm drain crossings with invert elevations
vi. Utility and other conduits with depths
vii. Station all scuppers and catch basins
viii. High and low points with station

g. Street geometrics must be included on the paving plans and be in conformance with City standard requirements for the following items:

   i. Station and sheet reference at all match lines in plan and profile.
   ii. Station all changes in street alignment and all proposed improvements
   iii. Gutter and centerline spot elevations at all grade breaks
   iv. Gutter spot elevations at all intersections.
   v. Centerline spot elevations at all intersections
   vi. Centerline radii
   vii. Tangent lengths between curves
   viii. Tangent lengths at intersections minimum 100 feet perpendicular to intersections, including knuckles
   ix. Top of curb (TOC) elevations at all property corners
   x. Pavement tapers
   xi. Intersection angles
   xii. Vertical curve lengths
   xiii. Maximum longitudinal slope changes
   xiv. Barrier median construction
   xv. Driveway type and station
   xvi. Curb radii
   xvii. Combination driveway and ADA compliant sidewalk ramps are not permitted.
   xviii. Intersection centerline- to- centerline offset shall be minimum 135 feet

h. Vertical curb and gutter, MAG STD DTL 220, Type A, and 5-foot transitions, MAG STD DTL 221, as necessary are required on all streets where the curb is adjacent to a tract and/or open space.

i. Vertical curves are required at all locations where grade breaks exceed an algebraic difference of:

   i. 1% on arterial streets
   ii. 2% on collector and local (residential) streets

j. The following traffic engineering items must be shown in plan view, when applicable:

   i. Signing and Striping plan for arterials
   ii. Street sign bases per MAG STD DTL 131
   iii. Traffic control devices
   iv. Stop sign = MUTCD R1-1, 30 inches x 30 inches
   v. Speed limit = MUTCD R2-1, 24 inches x 30 inches, speed per street class
   vi. Temporary turn-around at dead-end streets and phase lines

vii. MAG STD DTL 130 Type B Barricade with an 18 inches x I8 inches or larger End of Road Marker, MUTCD OM4-3 spaced 5 foot on center along the barricade is required.

viii. Street name signs shall be mounted on a “Telspar” (1 ¾ inches) tubing according to MUTCD.

ix. Signal conduit, 3 inches in diameter, schedule 40 P.V.C., with ADOT #7 pull boxes at future signalized intersections (four-way).

x. Signal conduit, 2 inches diameter schedule 40 P.V. C. with ADOT #5 pull boxes every 400 feet along entire length of arterial street frontage.

Preliminary Plat Checklist

1. GENERAL INFORMATION

    a. All plans shall conform to the requirements set forth in this portion of the Design Manual. Latest versions of the guidelines are available on the City of Maricopa web site.

    b. Any deviation from these requirements requires prior approval of the City Engineer.

2. GENERAL PLAN REQUIREMENTS

    All Construction or Improvement Plans shall be prepared per the following, but not limited to:

    a. Plans submitted for review shall have the appropriate professional (State of Arizona) seal, signature, registration expiration date and date of signature on each sheet.

    b. Plans shall be prepared on 24-inch by 36-inch (24" x 36") size plan sheets.

    c. All plan sheets shall include a 2-inch border on the left side for binding. A minimum of one-half inch border shall be provided on the remaining three sides of the plan sheet.

    d. All plans shall be bound or stapled in appropriate sets prior to submittal.

    e. All plan sheets in a set of plans shall be numbered in sequence.

    f. All plan sheets in a set of plans shall contain a "revisions" block.

    g. All plan sheets in a set of plans shall be dated. The date on a plan sheet will be revised for subsequent submittals.

    h. All plans shall be submitted as black-line prints.

3. PRELIMINARY PLAT REQUIREMENTS

The following are the requirements for the initial preliminary plat submittal to the City:

PRELIMINARY PLAT - RESIDENTIAL		
Copies	✓	Item
1		Pre-Application Letter of Understanding
1		Application
5		Preliminary Plat (24"x36")
1		Photo Mylar Transfer (PMT) 8.5"x11" reproduction of Preliminary Plat
1		Residential Design Guidelines
3		PAD/Zoning Conditions (Stipulations)
2		Title Report(s) - including all Schedule B items (no older than 60 days or as current as title bank search is available)
2		ALTA Survey (no older than 90 days)
1		Boundary Closure Calculations
2		Street Name List
2		Landscape Concepts
2		Preliminary Drainage Report
3		Soils Report
2		Traffic Impact Analysis
2		Utility 'Will Serve' Letter
1		Notarized Letter of Intent for Improvement(s)
1		Owner Authorization
Fee		$1200 + $10/lot/tract/unit (minus pre-application fee previously paid) PLUS plan review fees (See Fee Schedule)

SUBMITTALS FOR BOARDS AND COUNCILS		
Copies	✓	Item
1		Staff Recommendation for Approval
2		Preliminary Plat (24"x36")
1		PMT (8.5"x11")
		Supplemental Fee (Required for 3rd and subsequent reviews)

a. The minimum allowable scale is 1” = 100’.

b. Plans must be submitted on 24” x 36” sheets bound or stapled in sets.

c. The minimum height of all text, numbering and lettering shall be 0.10” (10 point type). All lettering and numerical data is required to be readable from the bottom or right side of the sheet.

d. Show the name of the proposed subdivision or development on the title block of the cover sheet.

e. Show the legal description (Section, Township, Range, Principle Meridian, County, and State) in the title block on the cover sheet as required by state law, including gross and net area.

f. If the subdivision is located in part or in total over a previously recorded plat, the appropriate record reference, i.e., Plat Name and Pinal County Recorder recordation information, must be included in the title block on cover the sheet.

g. Show the name of the owner of record, address and phone numbers on the cover sheet.

h. Show the developer's name, address and phone number on the cover sheet.

i. Show the design professional's name, address, and phone number on the cover sheet.

j. Provide a vicinity map on the cover sheet. The applicable City, Pinal County, Ak-Chin Indian Community and the Gila River Indian Community Limits must be labeled, if applicable.

k. The vicinity map shall include all adjacent roads, streets, and/or highways and a north arrow. Scale must be 1" = 1000' or 1" = 2000'.

l. Show a typical lot with minimum dimensions and easements on the cover sheet. PUE's are not permitted on rear or side lots.

m. Show the total number of lots on the cover sheet and circle the highest lot number.

n. Show the maximum, minimum, and average lot areas on the cover sheet.

o. Show the net and gross area of the subdivision on the cover sheet as part of the legal description.

p. Show areas of each tract and parcel on the cover sheet.

q. All elevations shown in the Preliminary Plat must be referenced to an approved City benchmark and must be fully described on the cover sheet of the Plat. If the benchmark is more than ½ mile from the site, a temporary benchmark close to, or on the site, must also be shown.

r. Provide a legend on the cover sheet.

s. The basis of bearing must be described on the cover sheet.

t. The existing zoning classification of the subject and adjacent tracts must be shown on the cover sheet by note.

u. Designated utilities must be shown on the cover sheet.

v. See the 'City of Maricopa Subdivision Ordinance' Article 14-1-4-B-8 for other items and statements regarding utilities that must be included.

w. Overhead utility lines and electric lines less than 69KVA, on or adjacent to this site, must be under- grounded. The following note must be added to the cover sheet:

THE IMPROVEMENTS SHOWN ON THIS PLAT WILL NOT BE FULLY APPROVED BY THE CITY OF MARICOPA UNTIL THE OVERHEAD UTILITY LINE UNDER -GROUNDING REQUIREMENT HAS BEEN SATISFIED.

x. The existing irrigation facilities not scheduled to be abandoned, on or adjacent to this site, must be placed underground. The following note must be added to the cover sheet:

THE IMPROVEMENTS SHOWN ON THIS SET OF PLANS WILL NOT BE FULLY APPROVED BY THE CITY OF MARICOPA UNTIL THE IRRIGATION FACILITY UNDER GROUNDING REQUIREMENT HAS BEEN SATISFIED.

y. Show a North Arrow and a scale on each sheet. North is to be oriented to the top or right side of the sheet.

z. Show all streams, canals, irrigation laterals and ditches, lakes, and other water features. Any proposed modifications to these features must also be noted. Open ditches and canals must be tiled, or landscaped.

aa. Show all existing water wells and note the applicable Arizona Department of Water Resources Registration Number. The proposed disposition of the existing wells must be noted on the Plat. Any well not registered with the ADWR, must be noted as such on the Plat. All wells must be registered prior to disposition and copies of the appropriate documentation provided to the City of Maricopa.

bb. Show and note all existing and proposed retention areas or basins.

cc. All proposed lakes shall be shown. The proposed usage must be noted.

dd. All portions of the development within the FIRM 100-year A or B Flood Zones must be identified. If any portion of the property is within the Flood Zone A, a copy of the Preliminary Plat must be submitted to the Pinal County Floodplain Administrator for Approval. Show floodplain limits in plan view.

ee. Show and dimension all existing and proposed street, utility, and railroad ROW widths.

ff. Note any existing easements or ROW to be abandoned.

gg. Show the sizes and types of all existing utility lines within, and adjacent to, the proposed subdivision with dimensional ties to street centerlines.

hh. The names of all present and proposed subdivisions adjacent to the property must be shown along with applicable County Recordation information.

ii. Perimeter traverse data is required to be shown on the Preliminary Plat for the entire property or subdivision boundary. Bearings and distances shall be shown for all tangents and radii, delta angles, and curve lengths shall be shown for all curves. Radial bearings or chord bearings shall be shown for all non-tangent curves.

jj. The subdivision boundary shown on the Preliminary Plat must match the property boundary described in the Title Report and shown on the ALTA Map.

kk. Submit boundary closure calculations, including the error of closure, for the property boundary.

ll. Curvilinear back lot lines are not permitted.

mm. Show the layout of all internal collector streets and local streets. This includes public streets, private streets and easements or tracts for streets.

nn. Local and collector street and alley ROW widths and cross -sections must comply with City Standards. Arterial Street ROW widths and cross sections must comply with City Standards.

oo. When the street construction centerline and the monument line are not the same, both shall be shown with applicable survey data.

pp. All street geometrics must comply with the City Standards.

qq. Curve radii for all centerline and ROW on bubbles, knuckles, and cul-de-sacs and for street monument lines must be shown on the Preliminary Plat. Minimum radius to back-of-curb is 48 feet per the Maricopa Fire Department.

rr. Turn-around facilities, and temporary turn-around facilities as applicable, are required on all dead-end streets and alleys per City Requirements.

ss. Visibility easements are required at all street intersections. A 33' x 33' triangular visibility easement is required at:

i. Arterial to arterial intersections
ii. Arterial to collector street intersections
iii. Collector to collector street intersections
iv. A 21' x 21' visibility easement is required at all local to local intersections

tt. Show a Visibility Easement Detail. In the detail, the area actually encompassing the sight visibility easement must be labeled as such and not as a visibility triangle

uu. Triangular corner cutoffs are required at all alley intersection corners, if applicable.

vv. Show any proposed Phasing of the Construction.

ww. Show lot numbers and tract or parcel designations. Tracts and parcels shall be lettered.

xx. All tracts or parcels that will be dedicated to the City of Maricopa must be noted as such, including the intended use and approximate area.

yy. The locations and sizes of all existing and proposed sewer lines, with directional flow arrows must be shown. The sanitary sewer system must comply with the City, County and ADEQ Standards and with the standards of the serving private sewer company.

zz. Show locations and sizes for all existing and proposed water lines including valves and fire hydrants.

aaa. When a storm drain system is proposed, the system must comply with City and County Standards. The locations and sizes of all existing and proposed storm drain lines, with flow direction arrows, and location of all catch basins and manholes, must be shown.

bbb. Flow direction arrows shall be shown for all drainage conveyed in the streets and in drainage ways and swales.

Sewer Plans

1. GENERAL INFORMATION

    a. All plans shall conform to the requirements set forth in this portion of the Design Manual. Latest versions of the guidelines are available on the City of Maricopa web site.

    b. Any deviation from these requirements requires prior approval of the City Engineer.

2. GENERAL PLAN REQUIREMENTS

    All Construction or Improvement Plans shall be prepared per the following, but not limited to:

    a. Plans submitted for review shall have the appropriate professional (State of Arizona) seal, signature, registration expiration date and date of signature on each sheet.

    b. Plans shall be prepared on 24-inch by 36-inch (24" x 36") size plan sheets.

    c. All plan sheets shall include a 2-inch border on the left side for binding. A minimum of one-half inch border shall be provided on the remaining three sides of the plan sheet.

    d. All plans shall be bound or stapled in appropriate sets prior to submittal.

    e. All plan sheets in a set of plans shall be numbered in sequence.

    f. All plan sheets in a set of plans shall contain a "revisions" block.

    g. All plan sheets in a set of plans shall be dated. The date on a plan sheet will be revised for subsequent submittals.

    h. All plans shall be submitted as black-line prints.

3. DRAFTING STANDARDS FOR IMPROVEMENT PLANS

    a. The minimum size of all lettering, and numerical data on a Plan Sheet shall be 0.10 (1/10) inch.

    b. All lettering, text, and numerical data on a plan sheet shall be readable from the bottom or right side of the sheet.

    c. Text should never be upside down.

    d. All line work, text, lettering, and symbols on a plan sheet shall be of a quality, density, and clarity such that all information contained on the plan sheet is readable on half-scale or half-sized plan sets.

e. All plan sheets containing drawings shall contain an appropriate north arrow, bar scale, and text scale.

f. All plan sheets containing drawings shall be oriented so that the north arrow points to the top or to the right side of the sheet.

g. All stationing shall be oriented to increase from the left side of the sheet to the right side of the sheet and from the bottom of the sheet to the top of the sheet.

h. Intersections shall not be cut by match lines and shall be complete from BCR to ECR on the same sheet. When intersecting streets are to be improved beyond ends of curb returns, additional plan and profile sheet are required. The intersections at the beginning and end of the project shall be fully shown.

i. Bearings, distances and stationing shall be shown on all street centerlines. Stationing numbers should be chosen to prevent 'negative' stationing. The project need not begin at 0+00. Sewer stationing is from manhole to manhole on each line segment starting from the downstream manhole.

j. Curve data shall be shown on the same sheet as the curve.

k. On streets that are not centered on the monument line, the stationing shall be along the construction centerline, which shall also be the crown line, unless super elevations or other conditions dictate otherwise. On such streets the ROW will be measured from the monument line. The offsets shown for new construction shall be from the construction centerline. Every attempt should be made to have the section centerline and the monument line to be the same line with the same bearing.

l. Plans should not contain shading but can use hatching or other means of delineating areas that do not include shading.

m. The minimum acceptable scale of the plans shall be per the following table:

TYPE OF PLANS	HORIZONTAL SCALE	VERTICAL SCALE
Sewer Plans*	1 inch = 20 feet	1 inch = 4 feet

* Typically, on all one plan set unless otherwise approved by City Staff

4. COVER SHEET STANDARD REQUIREMENTS

a. Title: Include the name of the project and the content of the plan set.

b. City Name: Below the title, include the words, 'City of Maricopa, Arizona'

c. Vicinity Map: At a minimum, locate the project relative to two intersecting arterial streets

d. Sheet Index

e. Key Map: On multiple sheet plans

f. Basis of Bearing: Must be in reference to a Pinal County recorded document

g. Legal Description: Provide Section, Township, Range and County. If site is located in a recorded subdivision plat, include subdivision name, lot number(s) and Pinal County recordation information.

h. Benchmark: Reference all elevations shown on the plans to an approved CITY OF MARICOPA benchmark. If the site is more than one-half mile from the nearest benchmark, show a temporary benchmark.

i. FEMA Block: Include Flood Plain information for site, including FIRM panel information and date of Flood Plain Map. Sites that are within A or B prefix flood plain designations will require submittal, review and approval to Pinal County Public Works Flood Control District prior to approval by CITY OF MARICOPA.

j. City of Maricopa Applicable Standard Plan Notes (General Notes, Grading and Drainage Notes, Paving Notes)

k. Utility Systems Notes: water, sewer, power, etc.

l. Utility Systems Ownerships: Including both dry and wet utilities

m. Approval Blocks: City Engineer, Fire Department, ADEQ, Global Water, Pinal County Public Works Flood Control District, etc. Include any necessary entity that will require approval prior to the issuance of permits.

n. Responsible Party Information: Owner, Engineer, Architect and Developer company names, contact persons, addresses and telephone and/or fax numbers.

o. Legend: For symbols, non-standard abbreviations, etc.

p. 'Blue Stake' Note: Required on all plans that include excavation of any type.

q. Tabulation of Quantities

r. Cut and Fill Quantities: Required for permit fee calculation.

s. Overall Utility Plan Shows: (key map)

    i. Sewer line with manholes

    ii. Water lines including fire hydrants

    iii. Streetlights

    iv. United States Postal Service cluster mail boxes

t. Supplemental Cover Sheet (Sheet 2 of the Plans)

i. Due to the limitations or area constraints on the Cover Sheet of the Plans, the City of Maricopa Standard Plan Notes may be put on a Supplemental Cover Sheet, or Sheet 2, of the plan set.

ii. This Supplemental Cover Sheet may also be used to include other Standard Notes, such as the water and sewer in the applicable plan sets.

u. Approval Blocks.

5. SEWER PLAN REQUIREMENTS

a. SEWER LINES IN STREETS WITH MEDIANS

i. Sewer Lines and/or Sewer Manholes located in Arterial Streets or Collector Streets, with a raised center median or a center turn lane, shall be 18 feet off of the centerline on the west or south sides of the street.

ii. Sewer Lines minimum cover is six (6) feet from top of pipe to bottom of sub grade.

b. SEWER LINES IN STREETS WITHOUT MEDIANS

i. Sewer Lines and/or Sewer Manholes located in Collector Streets with no raised center median or no center turn lane shall be 13 feet off of the centerline on the west or south sides of the street.

ii. Sewer Lines and/or Sewer Manholes located in Super Local Streets and Local Streets with no raised center median or no center turn lane shall be four (4) feet off of centerline on the west or south side of the street.

iii. Sewer Lines minimum cover is six (6) feet from top of pipe to bottom of sub grade.

c. SEWER LINES IN CURVILINEAR STREETS

i. Sewer Lines in curvilinear streets shall not cross the street centerline.

d. PROHIBITED SURFACE CONFLICT

Sewer Manholes and/or Cleanouts shall not be located in:

i. Driveways or Driveway Aprons
ii. Sidewalks or Sidewalk Ramps
iii. Curbs or Gutters
iv. Curb Return Aprons
v. Valley Gutters
vi. Wheel Path of any Roadway Lane

Storm Water Management Plans

1. GENERAL INFORMATION

    a. All plans shall conform to the requirements set forth in this portion of the Design Manual. Latest versions of the guidelines are available on the City of Maricopa web site.

    b. Any deviation from these requirements requires prior approval of the City Engineer.

2. GENERAL PLAN REQUIREMENTS

    All Construction or Improvement Plans shall be prepared per the following, but not limited to:

    a. Plans submitted for review shall have the appropriate professional (State of Arizona) seal, signature, registration expiration date and date of signature on each sheet.

    b. Plans shall be prepared on 24-inch by 36-inch (24" x 36") size plan sheets.

    c. All plan sheets shall include a 2-inch border on the left side for binding. A minimum of one-half inch border shall be provided on the remaining three sides of the plan sheet.

    d. All plans shall be bound or stapled in appropriate sets prior to submittal.

    e. All plan sheets in a set of plans shall be numbered in sequence.

    f. All plan sheets in a set of plans shall contain a "revisions" block.

    g. All plan sheets in a set of plans shall be dated. The date on a plan sheet will be revised for subsequent submittals.

    h. All plans shall be submitted as black-line prints.

3. DRAFTING STANDARDS FOR IMPROVEMENT PLANS

    a. The minimum size of all lettering, and numerical data on a Plan Sheet shall be 0.10 (1/10) inch.

    b. All lettering, text, and numerical data on a plan sheet shall be readable from the bottom or right side of the sheet.

    c. Text should never be upside down.

    d. All line work, text, lettering, and symbols on a plan sheet shall be of a quality, density, and clarity such that all information contained on the plan sheet is readable on half-scale or half-sized plan sets.

e. All plan sheets containing drawings shall contain an appropriate north arrow, bar scale, and text scale.

f. All plan sheets containing drawings shall be oriented so that the north arrow points to the top or to the right side of the sheet.

g. All stationing shall be oriented to increase from the left side of the sheet to the right side of the sheet and from the bottom of the sheet to the top of the sheet.

h. Intersections shall not be cut by match lines and shall be complete from BCR to ECR on the same sheet. When intersecting streets are to be improved beyond ends of curb returns, additional plan and profile sheet are required. The intersections at the beginning and end of the project shall be fully shown.

i. Bearings, distances and stationing shall be shown on all street centerlines. Stationing numbers should be chosen to prevent 'negative' stationing. The project need not begin at 0+00. Sewer stationing is from manhole to manhole on each line segment starting from the downstream manhole.

j. Curve data shall be shown on the same sheet as the curve.

k. On streets that are not centered on the monument line, the stationing shall be along the construction centerline, which shall also be the crown line, unless super elevations or other conditions dictate otherwise. On such streets the ROW will be measured from the monument line. The offsets shown for new construction shall be from the construction centerline. Every attempt should be made to have the section centerline and the monument line to be the same line with the same bearing.

l. Plans should not contain shading but can use hatching or other means of delineating areas that do not include shading.

m. The minimum acceptable scale of the plans shall be per the following table:

TYPE OF PLANS	HORIZONTAL SCALE	VERTICAL SCALE
Storm Water Management Plans*	1 inch = 20 feet	1 inch = 4 feet

* Typically, on all one plan set unless otherwise approved by City Staff

4. COVER SHEET STANDARD REQUIREMENTS

a. Title: Include the name of the project and the content of the plan set.

b. City Name: Below the title, include the words, 'City of Maricopa, Arizona'

c. Vicinity Map: At a minimum, locate the project relative to two intersecting arterial streets

d. Sheet Index

e. Key Map: On multiple sheet plans

f. Basis of Bearing: Must be in reference to a Pinal County recorded document

g. Legal Description: Provide Section, Township, Range and County. If site is located in a recorded subdivision plat, include subdivision name, lot number(s) and Pinal County recordation information.

h. Benchmark: Reference all elevations shown on the plans to an approved CITY OF MARICOPA benchmark. If the site is more than one-half mile from the nearest benchmark, show a temporary benchmark.

i. FEMA Block: Include Flood Plain information for site, including FIRM panel information and date of Flood Plain Map. Sites that are within A or B prefix flood plain designations will require submittal, review and approval to Pinal County Public Works Flood Control District prior to approval by CITY OF MARICOPA.

j. City of Maricopa Applicable Standard Plan Notes (General Notes, Grading and Drainage Notes, Paving Notes)

k. Utility Systems Notes: water, sewer, power, etc.

l. Utility Systems Ownerships: Including both dry and wet utilities

m. Approval Blocks: City Engineer, Fire Department, ADEQ, Global Water, Pinal County Public Works Flood Control District, etc. Include any necessary entity that will require approval prior to the issuance of permits.

n. Responsible Party Information: Owner, Engineer, Architect and Developer company names, contact persons, addresses and telephone and/or fax numbers.

o. Legend: For symbols, non-standard abbreviations, etc.

p. 'Blue Stake' Note: Required on all plans that include excavation of any type.

q. Tabulation of Quantities

r. Cut and Fill Quantities: Required for permit fee calculation.

s. Overall Utility Plan Shows: (key map)

    i. Sewer line with manholes

    ii. Water lines including fire hydrants

    iii. Streetlights

    iv. United States Postal Service cluster mail boxes

t. Supplemental Cover Sheet (Sheet 2 of the Plans)

i. Due to the limitations or area constraints on the Cover Sheet of the Plans, the City of Maricopa Standard Plan Notes may be put on a Supplemental Cover Sheet, or Sheet 2, of the plan set.

ii. This Supplemental Cover Sheet may also be used to include other Standard Notes, such as the water and sewer in the applicable plan sets.

u. Approval Blocks.

5. Storm Water Management Plan Requirements

This section has been prepared as a guide for preparation of plans for storm water drainage systems to be constructed within the City of Maricopa and along with the MAG STD DTLs and Specifications and the Pinal County Drainage Manual Volumes 1 and 2 should provide adequate information for plan and report preparation. The Pinal County Drainage Manual, Volumes 1 and 2 have been adopted by the City of Maricopa for design guidance and criteria except as amended herein.

a. The City Engineer shall require for review and approval the submittal of a drainage report whenever development and/or grading are proposed within the City of Maricopa limits. Development shall mean any man-made change to improved or unimproved real estate, including but not limited to: buildings or other structures, mining, dredging, filling, grading, paving, excavation, or drilling.

   i. A preliminary drainage report shall be submitted with the preliminary plat.

   ii. A final drainage report shall be submitted with the construction documents.

b. The City of Maricopa has adopted the use of the National Oceanic and Atmospheric Administration (NOAA) Atlas 14 in establishing the precipitation frequency estimates for the calculation of the required retention volumes.

c. The NOAA Atlas 14 data is based on the actual latitude and longitude of the site to be developed.

d. The only acceptable chart in the Atlas 14 data for the estimation of the precipitation frequency and of the intensity of the various storm events is the chart titled “Upper Bound of the 90% Confidence Interval”.

e. The Rational Method shall be used to estimate run-off when the drainage area is a fairly uniform land use. For larger, more complex watersheds or drainage networks, a rainfall runoff model shall be developed.

$$Q = C * i * A$$

Where:

Q = peak discharge (cubic feet per second)
C = runoff coefficient (see below)
i = rainfall intensity (inches per hour) for the duration of Tc

A = drainage area (acres)
Tc = time of concentration

f. Storm Water Prevention Pollution Plans (SWPPP) are required when more than one (1) acre of property is being disturbed for development.

RUNOFF COEFFICIENTS FOR THE RATIONAL METHOD	
Surface	C
Farm and Agricultural Land	0.20
Grass Lawns, Parks, Cemeteries (average slope 0-7%)	0.30
Grass Lawns, Parks, Cemeteries (average slope >7%)	0.35
Undeveloped Desert	0.50
Desert or Rock Landscaping, Decomposed Granite	0.50
Playgrounds	0.60
Bare Ground, Exposed Dirt, Vacant Lots	0.75
Impermeable Surfaces (pavement, rooftops, concrete, etc.)	0.95
Retention Basins (areas below highwater level)	1.00

g. Storm water plans for subdivisions and developments which are located in whole or in part within a Federal Emergency Management Agency (FEMA) 100-year flood zone (A or B prefix) shall be submitted to the Pinal County Public Works Flood Control District and approved by the Pinal County Public Works Flood Control District prior to approval by the City of Maricopa. The City of Maricopa supports the processing of Conditional Letter of Map Revisions (CLOMR) and Letter of Map Revisions (LOMR) through the Pinal County Public Works Flood Control District in order to reduce the burden of flood insurance on property owners. For larger developments, the CLOMR/LOMR can be processed per parcel affected by the flood plain, provided that the construction documents and drainage reports are also separated by corresponding parcel.

h. Finished floor elevations must be at least fourteen (14) inches above the lot, drainage sub-area, and development low-outfall elevation.

i. Positive drainage shall be provided for individual lots in the development site at a minimum 2% slope unless on-lot retention is provided. (See Part 2, Section 2.11 for On-Lot Retention requirements.)

i. Per the 2006 International Residential Code, lots shall be graded to drain surface water away from foundation walls. The grade shall fall a minimum of six (6) inches within the first ten (10) feet.

ii. Exception: Where lot lines, walls, slopes or other physical barriers prohibit six (6) inches of fall within ten (10) feet, the final grade shall slope away from the foundation at a minimum slope of five (5) percent and the water shall be directed to drains or swales to ensure drainage away from the structure. Swales shall be sloped a minimum of two (2) percent when located within ten (10) feet of building foundation. Impervious surfaces within ten (10) feet of the building foundation shall be sloped a minimum of two (2) percent away from the building.

j. A retaining wall is required if, at final grading, there exists more than one (1) foot grade differential between the properties or as approved by the City Engineer. A permit is required for retaining walls per the current adopted IBC. Submittals, reviews, and application must be made to the Building Safety Department.

k. Walls over six (6) feet in height also require structural reinforcement and building permits. Submittals, reviews, and application must be made to the Building Safety Department.

Water Plans

1. GENERAL INFORMATION

    a. All plans shall conform to the requirements set forth in this portion of the Design Manual. Latest versions of the guidelines are available on the City of Maricopa web site.

    b. Any deviation from these requirements requires prior approval of the City Engineer.

2. GENERAL PLAN REQUIREMENTS

    All Construction or Improvement Plans shall be prepared per the following, but not limited to:

    a. Plans submitted for review shall have the appropriate professional (State of Arizona) seal, signature, registration expiration date and date of signature on each sheet.

    b. Plans shall be prepared on 24-inch by 36-inch (24" x 36") size plan sheets.

    c. All plan sheets shall include a 2-inch border on the left side for binding. A minimum of one-half inch border shall be provided on the remaining three sides of the plan sheet.

    d. All plans shall be bound or stapled in appropriate sets prior to submittal.

    e. All plan sheets in a set of plans shall be numbered in sequence.

    f. All plan sheets in a set of plans shall contain a "revisions" block.

    g. All plan sheets in a set of plans shall be dated. The date on a plan sheet will be revised for subsequent submittals.

    h. All plans shall be submitted as black-line prints.

3. DRAFTING STANDARDS FOR IMPROVEMENT PLANS

    a. The minimum size of all lettering, and numerical data on a Plan Sheet shall be 0.10 (1/10) inch.

    b. All lettering, text, and numerical data on a plan sheet shall be readable from the bottom or right side of the sheet.

    c. Text should never be upside down.

    d. All line work, text, lettering, and symbols on a plan sheet shall be of a quality, density, and clarity such that all information contained on the plan sheet is readable on half-scale or half-sized plan sets.

e. All plan sheets containing drawings shall contain an appropriate north arrow, bar scale, and text scale.

f. All plan sheets containing drawings shall be oriented so that the north arrow points to the top or to the right side of the sheet.

g. All stationing shall be oriented to increase from the left side of the sheet to the right side of the sheet and from the bottom of the sheet to the top of the sheet.

h. Intersections shall not be cut by match lines and shall be complete from BCR to ECR on the same sheet. When intersecting streets are to be improved beyond ends of curb returns, additional plan and profile sheet are required. The intersections at the beginning and end of the project shall be fully shown.

i. Bearings, distances and stationing shall be shown on all street centerlines. Stationing numbers should be chosen to prevent 'negative' stationing. The project need not begin at 0+00. Sewer stationing is from manhole to manhole on each line segment starting from the downstream manhole.

j. Curve data shall be shown on the same sheet as the curve.

k. On streets that are not centered on the monument line, the stationing shall be along the construction centerline, which shall also be the crown line, unless super elevations or other conditions dictate otherwise. On such streets the ROW will be measured from the monument line. The offsets shown for new construction shall be from the construction centerline. Every attempt should be made to have the section centerline and the monument line to be the same line with the same bearing.

l. Plans should not contain shading but can use hatching or other means of delineating areas that do not include shading.

m. The minimum acceptable scale of the plans shall be per the following table:

TYPE OF PLANS	HORIZONTAL SCALE	VERTICAL SCALE

Water Plans*	1 inch = 20 feet	1 inch = 4 feet

* Typically, on all one plan set unless otherwise approved by City Staff

4. COVER SHEET STANDARD REQUIREMENTS

   a. Title: Include the name of the project and the content of the plan set.

   b. City Name: Below the title, include the words, 'City of Maricopa, Arizona'

   c. Vicinity Map: At a minimum, locate the project relative to two intersecting arterial streets

   d. Sheet Index

   e. Key Map: On multiple sheet plans

   f. Basis of Bearing: Must be in reference to a Pinal County recorded document

   g. Legal Description: Provide Section, Township, Range and County. If site is located in a recorded subdivision plat, include subdivision name, lot number(s) and Pinal County recordation information.

   h. Benchmark: Reference all elevations shown on the plans to an approved CITY OF MARICOPA benchmark. If the site is more than one-half mile from the nearest benchmark, show a temporary benchmark.

   i. FEMA Block: Include Flood Plain information for site, including FIRM panel information and date of Flood Plain Map. Sites that are within A or B prefix flood plain designations will require submittal, review and approval to Pinal County Public Works Flood Control District prior to approval by CITY OF MARICOPA.

   j. City of Maricopa Applicable Standard Plan Notes (General Notes, Grading and Drainage Notes, Paving Notes)

   k. Utility Systems Notes: water, sewer, power, etc.

   l. Utility Systems Ownerships: Including both dry and wet utilities

   m. Approval Blocks: City Engineer, Fire Department, ADEQ, Global Water, Pinal County Public Works Flood Control District, etc. Include any necessary entity that will require approval prior to the issuance of permits.

   n. Responsible Party Information: Owner, Engineer, Architect and Developer company names, contact persons, addresses and telephone and/or fax numbers.

   o. Legend: For symbols, non-standard abbreviations, etc.

   p. 'Blue Stake' Note: Required on all plans that include excavation of any type.

   q. Tabulation of Quantities

r. Cut and Fill Quantities: Required for permit fee calculation.

s. Overall Utility Plan Shows: (key map)

i. Sewer line with manholes

ii. Water lines including fire hydrants

iii. Streetlights

iv. United States Postal Service cluster mail boxes

t. Supplemental Cover Sheet (Sheet 2 of the Plans)

i. Due to the limitations or area constraints on the Cover Sheet of the Plans, the City of Maricopa Standard Plan Notes may be put on a Supplemental Cover Sheet, or Sheet 2, of the plan set.

ii. This Supplemental Cover Sheet may also be used to include other Standard Notes, such as the water and sewer in the applicable plan sets.

u. Approval Blocks.

5. WATER PLAN REQUIREMENTS

a. DEFINITIONS

i. Transmission Mains - All water lines, twelve (12) inches and greater in diameter, having no domestic water service connections (meters) or fire line connections for residential lots or commercial developments.

ii. Distribution Mains – All water lines, eight (8) and ten (10) inches in diameter, having domestic water service connections or fire line connections for residential lots or commercial developments.

b. WATER TRANSMISSION MAINS

i. Water Transmission Mains, shall be located in Arterial Streets (all lines greater than 12 inches diameter) or in Collector Streets (lines 12 inches in diameter).

ii. Water Transmission Mains shall be located 18 feet off of centerline for Arterials and 13 feet off of centerline for Collector streets on the north or east side of the street.

iii. Transmission Mains shall have a minimum of four (4) feet of cover from top of pipe to bottom of sub grade.

c. WATER DISTRIBUTION LINES

i. Water Distribution Lines, six (6), eight (8), or ten (10) inches in diameter, shall be located three feet behind the back of curb of Collector Streets; two feet in front of the property line of Super Local Streets; or three feet in front of the property line of Local Streets.

ii. Water Distribution Lines, shall be located three feet behind the back of curb of Collector Streets; two feet in front of the property line of Super Local Streets; three feet in front of the property line of Local Streets, on the east or north sides of the street.

iii. Water Distribution lines with diameters of six (6) and eight (8) inch shall have a minimum of three (3) feet of cover from top of pipe to bottom of sub grade.

d. PROHIBITED SURFACE CONFLICTS

Water Valves shall not be located in:

i. Driveways or Driveway Aprons
ii. Sidewalks or Sidewalk Ramps
iii. Curbs or Gutters
iv. Curb Return Aprons
v. Valley Gutters
vi. Wheel Path of any Roadway Lane

e. DUCTILE IRON PIPE

i. All Water Lines to be installed under street pavement shall be poly-wrapped Ductile Iron Pipe (DIP).

ii. A 'NOTE' must be shown on the Cover Sheet of the Water Plans stating the above requirement.

City of Maricopa
General Plan Requirements

1. Plans submitted for review shall have the appropriate professional (State of Arizona) seal, signature and date on each sheet.
2. Plans shall be prepared on a 24”x36” sheet size, with a minimum 2” left border and a minimum ½” border on other sides. North shall be as close as possible to the top or right side of sheet.
3. Plans shall be drawn to a minimum horizontal scale of 1” = 40’ and to a minimum vertical scale of 1”=4’. Unusual situations may warrant the use of a non-standard scale. Prior approval from Development Services staff is required.
4. Minimum lettering and numbering shall be 0.1 inch. Lettering, numbering and line work must be uniform and with clear definition. Lettering and numbering shall be positioned so that it may be read from the bottom or right side of the page.
5. A North arrow and bar scale shall be shown on each sheet. Project stationing shall be from South to North and from West to East.
6. In the area of match lines, portions of the same street are not to be repeated on separate sheets. Match lines shall show stationing and adjacent sheet number.
7. Intersections shall not be cut by match lines and shall be complete from BCR to ECR on the same sheet. When intersecting streets are to be improved beyond ends of curb returns, additional plan and profile sheets shall be used to detail the intersecting street. The intersections at the beginning and end of the project shall be fully shown.
8. Bearings, distances and stationing shall be shown on all street centerlines. Stationing numbers should be chosen to prevent ‘negative’ stationing. The project need not start at 0+00.
9. Curve data shall be shown on the same sheet as the curve.
10. On streets that are not centered on the monument line, the stationing shall be along the construction centerline, which shall also be the crown line, unless super-elevations or other conditions dictate otherwise. On such streets, the right-of-way will be measured from the monument line. The offset between the monument line and the construction centerline shall be shown and all offsets shown for new construction shall be from the construction centerline.

City of Maricopa
General Civil Plan Requirements

Cover Sheet Information Requirements:

1. **Title:** Include the name of the project and plan set content
2. **City Name:** Below the title, include the words, '**City of Maricopa, Arizona**'
3. **Vicinity Map:** At a minimum, locate the project relative to two intersecting arterial streets
4. **Sheet Index**
5. **Key Map:** On multiple sheet plans
6. **Basis of Bearing**
7. **Legal Description:** Provide project property legal description. When a legal description is not feasible, list Township, Range, Section and Location.
8. **Benchmark:** If more than ½ mile from the site, show T.B.M. on or near the site, referencing City benchmark.
9. **FEMA Block**
10. **'City of Maricopa' Applicable General Construction Notes**
11. **Utility system ownerships**
12. **City Engineer Approval block for signature**: The cover sheet should also include approval blocks for the appropriate utility companies/Agencies.
13. A.D.E.Q approval is required for all water and wastewater lines and facilities prior to City approval
14. Owner, Engineer, Architect and Developer company names, contact persons, addresses and telephone and/or fax numbers
15. **Legend:** For symbols, non-standard abbreviations, etc.
16. **'Blue Stake' Note:** Required on all plans that include excavation of any type
17. **Cuts and Fills Quantities**

City of Maricopa
Civil Site Plan Guideline

<u>This form is a GUIDELINE to assist in the preparation of a Civil Site Plan for submittal to and review by the City.</u>

REQUIREMENTS:

PLAN PREPARATION AND SUBMITTAL

Reference 'General Civil Plan Requirements' for Cover Sheet and plan preparation guidelines.
Reference 'Maricopa Approval Blocks' for applicable Approval/ Certification Blocks as required.
Reference 'City Standard Notes' for applicable notes.

1. If the site contains existing drainage facilities, add the following note to the grading plans:

   The existing retention and drainage facilities on this site will not be removed from service until the permanent retention and drainage facilities are functional.

2. The overhead utility lines on or adjacent to this site must be undergrounded. Waivers maybe requested in writing for redevelopment and/or in-fill area projects. Add the following note to the cover sheet:

   The improvements shown on this set of plans will not be fully approved by the City and the Certificate of Occupancy will not be issued until the overhead utility line undergrounding and/or 69KV pole relocation requirement has been satisfied.

3. The existing irrigation facilities on or adjacent to this site must be under grounded unless waived by prior agreement with the City. Add the following note to the cover sheet:

   The improvements shown on this set of plans will not be fully approved by the City and the Certificate of Occupancy will not be issued until the Irrigation undergrounding requirements have been satisfied. Written approval by the Irrigation District for removals and abandonments must be included.

4. Add the following note to the cover sheet:

   A RETAINING WALL WILL BE REQUIRED IF, AT THE COMPLETION OF GRADING, THERE EXISTS TWELVE (12) INCHES OR MORE OF DIFFERENCE IN ELEVATION BETWEEN THE SITE AND ADJACENT PROPERTIES. A 3:1 SLOPE MAY BE GRADED AS APPROVED BY THE CITY. (If required, provide under separate submittal)

GENERAL INFORMATION REQUIRED ON PLAN SHEETS

1. A North arrow and scale must be shown on each sheet of the Site Plan. The North arrow must point up or to the right.

2. Perimeter traverse data is required for the Site or Project Boundaries. This is the information normally required to define the land parcel legal description and must agree with the Legal Description shown in the Title Report.

3. Existing storm drainage facilities such as retention basins, catch basins, scuppers, and storm drainpipes must be shown on plans.

4. Existing buildings and other significant structures must be shown on the Plans. If any of the items are to be removed, they must be noted as such.

5. All existing sewer lines being tied into must be shown on the Plans with dimensional ties to the street centerline.

6. The location of existing water meters and water, reclaimed water, sewer, and fire line services to the site must be shown with dimensional ties.

7. The following information is required for existing streets and alleys adjacent to the development:

    a. Street name, or 'alley' label
    b. Right-of-way width
    c. Driveway locations on both sides of the street with dimensional ties to the centerline for vertical curbs
    d. Street light locations on both sides of the street with dimensional ties to the centerline
    e. Location of curb, gutter, and sidewalk by dimensional ties from the street centerline
    f. Width of sidewalk must be noted
    g. Extent and type of pavement with dimensional ties to the edge-of-pavement
    h. Unimproved alleys must be noted as such

8. Existing spot elevations must be shown at all property corners and at a reasonable spacing, typically 50-ft. intervals, throughout the site. Use flow arrows to show direction of flow. Spot elevations are required immediately off-site adjacent to the project boundary, to permit analysis of grade differentials and drainage. On large sites with significant natural slopes, minimum 1' contours may be required.

9. All Finished Floor Elevations must be a minimum of 12 inches above the high point of the building site or 12 inches above the water surface elevation of the Q_{100} flow in the adjacent street(s) or drainage way. (Pinal County Drainage Ordinance, Section 602.6.)

10. Construction details, cross-sections and/or profiles must be shown for all proposed drainage facilities such as:

    a. Retention basins (Show proposed contours)

b. Drainage swales (Show proposed spot elevations every 50 feet and at grade breaks)
c. Storm drains (Show profiles)
d. Scupper (Show cross-sections w/elevations at all grade breaks)
e. Catch Basins

11. Retention Basin Requirements:

    a. Maximum design storm water depth shall not exceed 3 feet
    b. Maximum 4: 1 side slope allowed
    c. Contours shall be shown on side slopes
    d. Basins must drain within 36 hours
    e. Show cross-section through basin

12. All proposed drywells must be registered with the Arizona Department of Environmental Quality (ADEQ) and a copy of the application must be provided to City for the project files.

13. All Drywells, at a minimum, shall be the double-chamber type consisting of an interceptor chamber and a settling chamber.

14. All Drywells receiving discharge from possible oil or chemical contaminated areas must include a separator chamber in addition to the interceptor chamber and settling chamber.

15. Cross-sections must be shown across all property lines. All existing and proposed perimeter walls shall be shown on the plans and cross-sections, with top-of-wall elevations and finished grade elevations on both sides of the wall.

16. A Drainage Report is required. The requirements shown on the '**Drainage Report Review Checklist**' applies to Drainage Reports for Civil Site Plans.

City of Maricopa
Drainage Report Guideline

<u>This form is a GUIDELINE to assist in the preparation of a Drainage Report for submittal to and review by the City.</u>

REQUIREMENTS:

A Drainage Report is **required** with the First Submittal of all Improvement Plans for Subdivisions and applicable Site Developments. The Drainage Report shall include the following items, as a minimum:

1. The Pinal County Drainage Ordinance must be used for drainage design criteria.

2. The Drainage Report and Drainage Maps must be signed and sealed by the Engineer.

3. The Drainage Report shall include a Pre-Development Drainage exhibit showing:

    a. North Arrow and scale
    b. Area of the Development
    c. Limits of all drainage sub-basins within and adjacent to the development property
    d. Storm event: 100-yr, 2-hr storm design
    e. Q_{10} and Q_{100} runoff or flow amounts for each drainage sub-basin
    f. Location and elevation of the outfall point for the property
    g. Direction of flows onto and/or across the Development property
    h. Location of all significant watercourses within or adjacent (within 100 feet) to the Development property
    i. Type and limits of any FEMA Flood Zones on the property
    j. Legend for all symbols used on the Map

4. The Drainage Report shall include a Post-Development Drainage exhibit showing:

    a. Title Block with Legal Description of the property
    b. North Arrow and scale
    c. Property, Parcel and Lot Lines
    d. Street Names
    e. Location of existing and proposed drainage structures
    f. Location and size of any existing or proposed drainage easements
    g. An on-site temporary elevation bench mark for verification purposes – the City of Maricopa benchmark is currently located at the Post Office, Maricopa, AZ

h. Topography with a maximum one (1) foot contour interval and/or sufficient spot elevations to determine building pad elevation(s)
i. Tables showing the Q_{10} and Q_{100} values for all on-site concentration points, and intercepted and bypass flow amounts for each drainage structure such as catch basins and scuppers
j. Delineation of all drainage areas and associated retention basins and drainage structures
k. Q_{10} and Q_{100} volumes for any off-site drainage entering the site and the locations of the entrance points
l. Q_{10} and Q_{100} volumes for any off-site pass-through drainage exiting the site and the locations of the exit points
m. Flow arrows indicating the drainage flow direction and patterns
n. Legend for all symbols used on the Map
o. Type and limits of any FEMA Flood Zones on the property
p. Locations of all percolation tests

5. The Report shall include a discussion of any off-site drainage flows and patterns affecting the site, including the types and limits of the FEMA flood zones.

6. The Report shall include a discussion of the low outfall elevation for each drainage area, including the effects of an overflow situation in the case of back-to-back storms. The location and elevation of the low outfall point for each drainage area and the overall subdivision site must be shown on the Drainage Map.

7. The Report shall include a discussion concerning the minimum Finished Floor elevations within the development.

8. The Report shall include typical street sections for all street types in the subdivision and hydraulic calculations showing the water surface elevations of the Q_{100} flow in the streets in all critical areas, i.e. where the Q_{100} flow is not contained within the street right-of-way. The report must also include a Table showing the Q_{100} high water elevation and the minimum Finished Floor Elevations for all Lots in those critical areas.

9. The street calculations shall show that at least one 12-foot driving lane in each direction shall remain dry for collector and arterial streets. The velocities shall be based upon the 10-year full depth.

10. The report shall include calculations that determine the point on the streets at which the MAG STD DTL 220-1 TYPE C 4" roll curb is not adequate to contain the Q_{10} flow and the curb is transitioned to the MAG Standard 220, Type A, 6" vertical curb and gutter.

11. The Report shall include calculations showing the volume of retention <u>required</u> for each drainage area retention basin or system of multiple retention basins connected by equalization pipes. The required volume shall include the calculated individual volumes, based on the 100-year, 2-hour storm precipitation rate (P) from all drainage sub-basins or sub-areas contributing to the retention basin or retention basin system.

12. The Report shall include calculations showing the volume of retention provided for each drainage area retention basin or system of multiple retention basins connected by equalization pipes. The retention volume provided in each retention basin must meet or exceed the required volume calculated for that drainage area retention basin or system of multiple retention basins connected by equalization pipes.

13. The Report shall include calculations determining the depth of ponding, or high water elevation, within the drainage area retention basin or system of multiple retention basins connected by equalization pipes based on the required retention volume.

14. The Report shall include calculations showing the retention basin drain-down or dry-up time due to basic percolation. If the calculated time exceeds the 36-hour dry-up requirement, one or more drywells are required. The calculations must show the number of drywells required to comply with the 36-hour requirement.

(Note: The theoretical drywell design drainage rate cannot exceed 0.1 cfs until an 'As-Built' percolation test is performed on the drywell and the actual percolation rate is determined.)

15. All drywells must be two (2) – chamber design.

16. Underground storage is not recommended, however, it will be considered on a case-by-case basis per the City Engineer.

17. The Report shall include catch basin inlet and pipe sizing and capacity calculations.

18. The Report shall include scupper inlet sizing and capacity calculations and scupper spillway calculation, where appropriate.

19. Copies of all calculations, formulas, and charts used in the analysis shall be included in the Report.

20. Copies of the Shallow pit percolation test results shall be included as an Appendix to the Drainage Report.

City of Maricopa
Grading and Drainage Plan Guideline

<u>This form is a GUIDELINE to assist in the preparation of a Grading and Drainage Plan for submittal to and review by the City.</u>

REQUIREMENTS:

PLAN PREPARATION AND SUBMITTAL

Reference 'General Civil Plan Requirements' for Cover Sheet and plan preparation guidelines.
Reference 'Maricopa Approval Blocks' for applicable Approval/ Certification Blocks as required.
Reference 'City Standard Notes' for applicable notes.

1. The First Submittal of the Grading and Drainage Plans shall include, at a minimum, the following items (unless previously submitted):
   a. Drainage Report covering the entire development
   b. Geotechnical or Soils Report
   c. Include percolation test results as part of the review process. Under no circumstances will testing be deferred to after completion of site grading.

2. The Grading and Drainage Plans must encompass the entire parcel or development. All lots, tracts, and retention basins must be shown in their entirety. Phase limits and numbers, if applicable, must be shown on each applicable sheet

3. Detailed typical street sections shall be shown on a separate detail sheet.

4. Show a Legend on the detail sheet, for all symbols used on the grading plans.

5. The following blocks are required on the Cover sheet. See 'General Plan Requirements' for Cover sheet and general requirements.
   a. City Engineer Approval
   b. Grading/Drainage Certification Block
   c. As-built Certification Block

6. When temporary retention basins or storm drainage facilities are present or proposed, the following Note must be shown on the cover sheet:

   The existing or proposed temporary retention and/or drainage facilities located within the area of this development will not be removed from service until the permanent retention and drainage facilities are functional.

GENERAL INFORMATION REQUIRED ON PLAN SHEETS

1. Show all existing and proposed storm drainage facilities, such as retention basins, catch basins, scuppers, curb and gutter and storm drain pipes, on the grading plans and identified by type and size. The designation of the facilities and structures shall match the designations used in the Drainage Report.

2. Show all existing buildings and other significant structures. The removal of these items must be noted, if appropriate.

3. Show all existing wells, streams, canals, irrigation laterals and ditches, lakes and other water features. Any proposed modifications must also be noted.

4. Show the existing topography by contours. Spot elevations are required when the subdivision's topography cannot be clearly defined by contours. Sufficient spot elevations are required immediately off-site, adjacent to the subdivision boundary within a 50-foot buffer, to provide an adequate analysis of grade differentials and drainage.

5. Spot elevations must be shown for all existing curb and gutter adjacent to the development. Spot elevations must be shown adjacent to each property corner, at all grade breaks, and at all scuppers/catch basins.

6. Cross-sections must be shown across the development's property line boundaries.

7. The following information must be shown for each Lot:

   a. Proposed elevations at lot corners.
   b. Proposed Finished Pad elevations
   c. Proposed Finished Floor elevations

8. All existing and proposed block site perimeter walls on or adjacent to subdivision boundaries and retention basin perimeters must be shown on the plans, with Top of Wall elevations and Finished Grade elevations on both sides of the wall, at all critical points. (Note: This requirement does not include block fences or Dooley Walls.)

9. All site perimeter wall structural details and retaining wall structural details are required to be shown on the plans.

10. All Finished Floor Elevations must be a minimum of 12 inches above the high point of the building site or 12 inches above the water surface elevation of the Q_{100} flow in the adjacent street(s) or drainage way. (Pinal County Drainage Ordnance, Section 602.6.)

11. The Lot grading must be adequately sloped to prevent storm water from ponding on the Lot. The minimum allowable slope from back of Lot to front of Lot shall be 0.50%, unless prior approval is obtained from the City Engineer.

12. Cross-sections must be shown for all retention basins with the elevations of the top of slope, the bottom of the basin, and the side-slope called out. The depth of ponding in the basin, due to the retention of the 100-year, 2-hour storm event must also be shown on the retention basin cross-section. The maximum allowable depth of ponding in the basin is 3 feet. The maximum allowable side-slope is 4:1.

13. No portion of a retention basin shall encroach within the street right-of-way or the Public Utility Easement (PUE).

14. The grading plan of all retention basins must show:

    a. The Tract number or designation
    b. The same retention basin designation as shown in the Drainage Report
    c. Contours shall be 1' (foot) minimum elevations
    d. The design 100 yr High Water elevation with 1' of freeboard and Bottom elevation.
    e. The dimensioned location of all Dry Well(s), with grate elevations, if applicable. .
    f. All Drywells, at a minimum, shall be the double chamber type consisting of an interceptor chamber and a settling chamber.
    g. Show outfall for "All" individual basins.
    h. Show ultimate outfall for entire development.
    i. Show volume required/provided per Drainage Report.

15. Show construction details for the following items, but not limited to:

    a. Drainage swales with grade and spot elevations
    b. Storm drains with profile and showing Hydraulic Grade Line
    c. Catch basins and connector pipes with profile and showing Hydraulic Grade Line
    d. Scuppers and spillways – Show a longitudinal section, with elevations and slopes, that includes the full width of the street, scupper, spillway, bottom of the retention basin, and the end of the erosion protection. The design high water elevation must be noted on the appropriate location on the spillway.

City of Maricopa
Paving Plan Guideline

<u>This form is a GUIDELINE to assist in the preparation of a Paving Plan for submittal to and review by the City.</u>

REQUIREMENTS:

PLAN PREPARATION AND SUBMITTAL

Reference 'General Civil Plan Requirements' for Cover Sheet and plan preparation guidelines.
Reference 'Maricopa Approval Blocks' for applicable Approval/ Certification Blocks as required.
Reference 'City Standard Notes' for applicable notes.

1. The first submittal of the Paving Plans shall include the following items.

   A Geotechnical/ Soils Report containing, at a minimum, Atterburg Limits test results, Sieve analysis and gradation test results, and swell test results. The Report must include pavement section recommendation for all streets.

2. All elevations shown on the plan must be referenced to an approved Benchmark or TBM established by the Engineer.

3. Typical sections for each street to be improved must be shown on the detail sheet with dimensions. The sections must include the following:

   a. Right-of-way width
   b. Width of sidewalk
   c. Width of improved surface
   d. Type of curb and gutter, i.e. roll or vertical
   e. Pavement cross-section
   f. Label all easements
   g. Minimum pavement cross-slope (Inverted crowns not allowed)
   h. Street names

4. The following utility reference items must be shown on each sheet:

   a. All existing utilities must be shown in plan view
   b. All proposed utilities must be shown in plan view
   c. Utility crossings must be shown in profile view
   d. All manhole and valve box adjustments must be noted on the plan view with appropriate M.A.G. detail referenced

5. The following design items must be shown on each sheet in plan view with all applicable dimensions and standard detail identification:

   a. Existing and proposed right-of-way
   b. Existing and proposed roadway section (B/C to B/C)
   c. Existing and proposed curbs including curb type.
   d. Existing and proposed sidewalks width dimensioned
   e. Existing and proposed pavement width dimensioned
   f. Existing and proposed sidewalk ramps (MAG Standard Detail 231-A and 233-C) for proposed ramps
   g. Curb transitions with standard detail referenced
   h. Valley gutters at all locations storm water will cross the street, with width and MAG standard detail noted
      i) Show 3' valley gutters at Local Residential
      ii) Show 6' valley gutters at Collector and Arterial
   i. Proposed sidewalk ramps at mid-block or other locations, if applicable (MAG Standard Detail 233-C)
   j. Survey monuments, MAG Standard Detail 120-1, and type
   k. All existing items 'to be protected in place' must be noted
   l. All existing water wells within the right-of-way must be shown on the plan with the associated Department of Water Resources registration number. If not registered, so note on the plans.
   m. Sight distance/visibility easement
   n. City limits, where applicable
   o. Label street names
   p. Cross-reference adjacent improvement plans by plan check number
   q. Conduit crossing including traffic signal and irrigation
   r. Curb return radii per City standards (25' min. radius)
   s. Curb radii at cul-de-sacs and 'bubbles' per City standards (45' B/C min. radius)
   t. Sufficient existing off-site elevations are required, to be shown a minimum of 50' outside of the improvements in order to determine grade and direction of slope
   u. Maximum length of cul-de-sacs shall be 500'

6. The following design items must be shown on each profile view as applicable:

   a. Existing grade at right curb line
   b. Existing grade at left curb line
   c. Existing grade at centerline
   d. Proposed grade at right curb line
   e. Proposed grade at left curb line
   f. Proposed grade at right median curb
   g. Proposed grade at left median curb
   h. Proposed grade at centerline
   i. Proposed centerline elevation at curb return station on crown run-outs (Inverted crowns are not allowed)
   j. The proposed longitudinal grades must be labeled. The longitudinal grades on curves must be computed based on their true lengths. The longitudinal grades must be 0.25% minimum.
   k. Storm drain crossings with invert elevations
   l. Utility and other conduits
   m. Station all scuppers and catch basins
   n. Low points with station

7. Street geometrics must be in conformance with City/County standards and/or the City Engineer's requirements for the following items:
    a. Station and sheet reference at all match lines in plan or profile
    b. Station all changes in street alignment and all proposed improvements
    c. Gutter and centerline spot elevations at all grade breaks
    d. Gutter spot elevations at all intersections
    e. Centerline spot elevations at all intersections
    f. Centerline radii
    g. Tangent lengths between curves
    h. Tangent lengths at intersections minimum 100' perpendicular to intersections, including knuckles
    i. Pavement tapers
    j. Intersection angles
    k. Vertical curve lengths
    l. Maximum longitudinal slope changes
    m. Barrier median construction
    n. Driveway type and station
    o. Curb radii – minimum 25' radius
    p. Combination driveway and handicap ramps are 'Not Allowed'
    q. Centerline-to-Centerline offset shall be minimum 135' (feet)

8. Six-inch (6") Vertical Curb and Gutter, MAG Standard Detail 220, Type A, with 5-foot Transitions, MAG Standard Detail 221, as appropriate, is required on all streets where the curb is adjacent to a Tract and/or Open Space.

9. Vertical curves are required at all locations where grade breaks exceed an algebraic difference of:
    a. 1% on arterial streets
    b. 2% on collector and local (residential) streets

10. The following traffic engineering items must be shown in plan view, when applicable:
    a. Provide a Signing and Striping plan for arterials
    b. Street sign bases per MAG Standard Detail 131
    c. Traffic control devices
        i) Stop sign = MUTCD R1-1, 30" x 30"
        ii) Speed limit = MUTCD R2-1, 24" x 30", speed per street class
    d. Temporary turn-around at dead-end streets and phase lines
    e. MAG Standard Detail 130 Type B Barricade with an 18" x 18" or larger End of Road Marker, MUTCD OM4-3 spaced 5' on center along the barricade is required
    f. Street name signs shall be mounted on a "Telspar" tubing according to MUTCD - Contact the City of Maricopa Public Works Department for specific detail of posts
    g. Signal conduit, 3" in diameter, schedule 40 P.V.C., with ADOT #7 pull boxes at future signalized intersections (four-way)
    h. Signal conduit, 2" diameter schedule 40 P.V. C. with ADOT #5 pull boxes every 400 feet along entire length of arterial street frontage

City of Maricopa
Signing and Striping Policy
December 2005

1.0 General Information

The following publications or their current revisions are to be used in conjunction with the City of Maricopa Signing and Striping Standards for all traffic signing and marking design work.

- Manual on Uniform Traffic Control Devices for Streets and Highways (MUTCD) - USDOT/FHWA
- Signing And Marking - Standard Drawings - ADOT
- ADOT Traffic Control Design Guidelines - ADOT
- Manual Of Approved Signs (MOAS) - ADOT
- Traffic Engineering Policies, Guidelines and Procedures - ADOT
- Uniform Standard Specifications For Public Works Construction - MAG
- Uniform Standard Details For Public Works Construction – MAG
- Roundabouts: An Informational Guide - FHWA
- City of Maricopa Small Area Transportation Plan - Maricopa

2.0 Design Standards

All signing and striping designs are to be in accordance with the MUTCD unless modified by the City as noted below. All pavement markings, sign materials, and construction methods must conform to the ADOT Standard Drawings and Specifications unless otherwise noted. The City Engineer's office must be notified five business days prior to starting any signing or striping work at (520) 568-9098.

2.1 Signing

a) The City Engineer may require the contractor to adjust signing as necessary.
b) Sign locations and offsets may be adjusted by the City Engineer to improve visibility.
c) All Warning, Regulatory and Arterial Street Name Signs must be manufactured of "ASTM D-4956-04 Proposed Type XI Sheeting" (3M DG3 4090 series or equivalent) all other signs must be manufactured with "ASTM D-4956-04 Type IV Sheeting" (3M 3930 Series or equivalent) which will be attached to the standard signage aluminum plates. Sign imaging shall be in compliance with the reflective sheeting manufactures matched component system. Sign imaging shall consist of an acrylic based electronic cuttable film (3M 1170 Series or equivalent) or silk screened (depending on the quantity of signage) with standard highway colors. In addition, if called out on plans, to create a graffiti-protective coating, a protective overlay film 3M 1160 or equivalent shall be used which is designated to comply with the underlying reflective sheeting match component system.

d) Warranty documents are required and must be submitted prior to job acceptance.
d) All traffic control signs, except stop signs, must be attached to street light poles if the pole is within 25 feet of the sign location shown on the signing and striping plans.
e) Speed limit signs (R2-1) are to be installed at four signs per side, per mile.
f) Stop signs (R1-1) are to be 30 inches by 30 inches, minimum size.
g) Street name signs in subdivisions must conform to city colors and standards.
h) Advance street name signs are to be installed at a height of 4 feet to the bottom of sign and placed so they are not obstructed by vegetation. Signs are to be installed in medians whenever possible.
i) All existing signs temporarily removed by the contractor must be salvaged for reinstallation by the contractor.
j) All existing signs permanently removed by the contractor must be salvaged and returned to the Public Works Superintendent.

2.2 Striping

a) The City Engineer may require the contractor to adjust signing as necessary.
b) All permanent longitudinal pavement striping (centerlines, lane lines, bay lines) must use 60 mil. hot-sprayed or extruded thermoplastic. Reflective glass beads must be applied in accordance with section 704 of ADOT's Standard Specifications for Road and Bridge Construction.
c) All permanent lateral pavement striping (stop bars, crosswalk lines) must use 90 mil. hot-sprayed or extruded thermoplastic. Reflective glass beads must be applied in accordance with section 704 of ADOT's Standard Specifications for Road and Bridge Construction.
d) All temporary pavement markings must use reflective traffic paint.
e) All median noses must be painted yellow with reflective glass beads from the tip of the median back 10 feet.
f) All raised pavement reflectors must be installed with CRAFCO pavement reflector adhesive, or equivalent.
g) All conflicting pavement markings must be obliterated by means of water blasting by the contractor.
h) A sealant approved by the City Engineer must be applied by the contractor to all areas where pavement markings have been obliterated.

3.0 Signing/Striping Plan Layout

3.1 General Requirements

a) Signing and pavement marking designs should be shown in "plan view" and on the same plan sheet, if practicable.
b) All plan sheets are to be complete and to scale, no smaller than 1 inch = 40' unless approved by the City Engineer.
c) Entire length of project is to be shown in plan view. Typical Sections representative of striping and/or signing will not be accepted.
d) Signing and pavement marking plans need to include all existing signing and pavement markings for a minimum of 300 feet past the limits of construction

(except those devices that are to be removed), and include adequate transitions and tapers to existing pavement markings to maintain traffic at the design speed.
e) The City requires a specific title and signature block to be placed in the lower right corner of each sheet. The consultant's title block should be placed adjacent to the city block. The signature block must include the City Engineer.
f) Right-of-way lines are to be clearly identified on all plan sheets.
g) Plan sheet notes along with any additional project specific notes are to be placed on the lead signing and pavement marking plan sheet.

3.2 Signing

a) All signs must be graphically depicted in the direction of travel.
b) All signs must be stationed and referenced to the appropriate MUTCD sign designation with size noted.
c) Existing or proposed speed limit must be posted to provide adequate approach visibility. Existing or proposed roadway improvements, vegetation, or structures cannot block traffic sign visibility.
d) All existing signs must be identified to remain, be removed, or be relocated and must be stationed and referenced to the appropriate MUTCD sign designation.
e) All existing advance or approach signing applicable to the project must be field verified and referenced on the plan sheets, including location and/or station, and proposed status of sign.

3.3 Striping

a) All existing striping that is to remain must be fully shown (as screened lines or lightly inked pen lines), identified by type and width, and completely dimensioned across roadway.
b) Raised pavement markers must be graphically shown in plan view and referenced by construction notation.
c) All new striping must be clearly identified noting color, line width, beginning station, ending station, and intermediate stations at all directional changes.
d) Striping to be removed needs to be identified as such on the plans.
e) All striping must be fully dimensioned across roadway and tied to a construction centerline or monument line at each side of an intersection.
f) All pavement arrows, legends, crosswalks, etc., must be located by station or dimension lines.

APPENDIX D
SWPPP GUIDANCE CHECKLIST

SWPPP Guidance Checklist:

This optional checklist is provided to assist owners and operators in preparing their Arizona Pollutant Discharge Elimination System (AZPDES) Storm water Pollution Prevention Plan (SWPPP) to meet the requirements of Arizona's 2008 Construction General Permit (CGP) (AZG2008-001). The 'Descriptions' provided below do not necessarily reflect the exact wording used in the permit; rather these are stated in simplified language to provide additional guidance. (Note: if any inadvertent conflict exists between this document and the permit, the permit language prevails). The 'Permit Citation' column shows you where each particular requirement is found in the 2008 CGP. Use the 'Location' column to note the page where the requirement is addressed in your SWPPP. Please leave the 'For ADEQ Use Only' column blank. Using this SWPPP checklist will help you ensure that all the permit requirements are addressed in your SWPPP and will also assist the Department in conducting a more efficient review of your SWPPP if it is required to be submitted.

Please note that your SWPPP does not have to follow the format of this checklist; the purpose of this checklist is only to ensure that your SWPPP contains all required components. While this checklist is intended for use in preparing your initial SWPPP, your SWPPP is a 'living' document and it is important that it be updated to document changes in your project, best management practices (BMPs), inspections, and other pertinent information.

Permit Citation	Description	Location in SWPPP & Notes	For ADEQ Use Only
OPERATOR RESPONSIBILITIES			
Part III.A.2.d	Identify who is responsible for on-site SWPPP implementation		
Part III.B.2.a.	Indicate or show the areas of the project where the operator has control over project specifications, including the ability to make changes in specifications		
Part III.B.2.a	Provide name(s) of the person(s) who have day-to-day control over construction plans and specifications		
Part III.B.2.b	Identify who is responsible for installing, implementing, and maintaining the BMPs in the plan		
Part III.B.2.b	Identify or show the areas of the project where each operator has control over day-to-day activities		
Part III.B.2.b	Provide name(s) of the person(s) having control over project specifications, including the ability to make changes in specifications		
Part III.C.1	Provide the name and contact information for all operators and indicate the areas of the project each operator controls		
PROJECT DESCRIPTION			
Part III.A.2.a	Identify all potential sources of pollutants/pollution from construction activities that could possibly contact storm water		
Part III.C.2.	Describe the construction activity (what is being built, what is being disturbed, how long it is expected to take, etc.)		
Part III.C.2.a	Describe the project and what it will be used for when completed (after Notice of Termination (NOT) is filed)		
Part III.C.2.b	Describe the planned phasing or sequencing of land disturbance activities. The amount of open/disturbed dirt left open at one time should be minimized where possible		
Part III.C.2.c	Indicate the total acres of the site and number of acres that will be disturbed (include off-site borrow and fill area, staging and equipment storage areas)		
Part III.C.2.d	Indicate the percentage of the site that is impervious (e.g., paved, roofed, etc.) before and after construction		
Part III C.2.e	Describe the soil (e.g., sand, clay, etc.) at the site and its potential for erosion (Suggestion: reference the Soil Survey covering the project site prepared by the U.S. Department of Agriculture, Natural Resource Conservation Service for soil information http://soils.usda.gov/survey/)		

Part III.C.2.f	Include a map showing the project location (e.g. U.S.G.S. quadrangle, portion of a city or county map). The map must also show any washes or other water bodies within 1 mile of the site
Part III.C.4	Identify the nearest receiving water(s). A receiving water is a natural watercourse into which storm water would flow in a storm event and includes dry washes, streams, tributaries, and other waters of the U.S. (such as designated canals). Man-made structures such as retention basins, storm sewer systems, or city storm drains are not receiving waters.
Part III.C.4	Identify the areal extent where soils may be disturbed and show any wetlands near the site that could receive dirt or run-off from the construction activity
Part III.C.6	Describe any pollutant sources from areas other than dirt moving (e.g., dedicated concrete and asphalt plants, fueling operations, material or waste storage etc. that are associated with the construction project). Identify where these sources are or will occur on site
SITE MAP (note multiple maps may be used) All the following are to be shown on the site map or maps	
Part III.C.3.	Include a site map completed to scale
Part III.C.3.a.	Use arrows to show the direction(s) where storm water will flow for all areas within the project limits (This is for the period during construction, not final contours. Flow direction may change as project grading progresses; when this occurs, maps are to be updated.)
Part III.C.3.b.	Show areas of soil disturbance and areas that will not be disturbed
Part III.C.3.c.	Show all structural BMPs identified in the SWPPP
Part III.C.3.d.	Show locations where stabilization BMPs are expected to occur
Part III.C.3.e.	Show locations of on-site material storage, waste storage or receptacles, borrow areas, equipment storage or other supporting activities

Part III.C.3.f.	Identify any water bodies (including dry washes and wetlands) on the site. If there are no water bodies, indicate this on the map
Part III.C.3.g.	Show locations where storm water discharges to surface water (including wetlands, ephemeral waters and dry washes) and to municipal storm sewer systems (MS4s) (use an “X” to indicate discharge location(s)). Where surface waters and/or MS4s receiving storm water do not fit on the map, use arrows to show the direction and indicate the approximate distance to the surface water and/or MS4

Part III.C.3.h.	Show the location and registration number of all onsite dry-wells and dry-wells located on adjacent properties that could receive storm water from the site (if none exist, indicate that)
Part III.C.3.i.	Identify any areas of the site where final stabilization has been achieved
Part III.C.3.j	Specify existing vegetated areas (trees, brush, etc.) and boundaries of environmentally sensitive areas and buffer zones that are to be preserved
BMP (Best Management Practices) REQUIREMENTS	
Part III.A.2.b, III.C.5.a, and IV.A.1	Identify BMPs selected for the site and describe how each will reduce pollutants in stormwater
Part III.C.5.b	Describe how BMPs will be added, modified, or replaced for each phase or sequence of construction activities. Also, identify which operator is responsible for the implementation of BMPs
Part III.C.5.c	Provide drawings and/or specifications of structural BMPs that include design or installation details
Part IV.B.1.a	Describe where natural/existing vegetation will be preserved. Locations of trees and boundaries of environmentally sensitive areas and buffer zones to be preserved are also to be on the SWPPP site map
Part IV.B.1.b	If using seed to revegetate, provide the mixture and application specifications. (These may be obtained from product provider)
Part IV.B.1.c	If culverts are present on-site, describe measures that will be used to minimize erosion at and around the culvert(s)
Part IV.B.1.d	Describe how off site stormwater that may run onto the project site will be diverted or otherwise managed with on-site engineering controls, containment, or BMPs
Part IV.B.3.a.	Identify how records of dates when major grading activities occur will be kept
Part IV.B.3.b.	Identify how records of when construction activities temporarily or permanently cease on all portions of the site will be kept
Part IV.B.3.c.	Identify how records of when stabilization measures are initiated and completed and reason(s) for delay will be kept

Part IV.C.3	Provide sizing criteria and show calculations for sediment basin(s) and indicate whether basin(s) will be temporary or permanent (i.e., post-construction)
Part IV.C.3	Provide reason(s) or rationale why a sediment basin was determined to not be possible at the project site (If applicable)

Part IV.D.3.	Describe the location(s) and how materials will be stored or staged both on-site and offsite; including overburden, soil stockpiles, and borrow areas
Part IV.E.2.	Identify and provide the location(s) of all non-stormwater discharges allowed by this permit expected to be associated with the project and describe BMPs used to minimize discharge of pollutants
Part VI.B.1	Describe measures for preventing and responding to spills, including spill notification requirements
POST-CONSTRUCTION CONTROLS	
Part IV.F.1.	Identify post-construction stormwater BMPs (e.g., porous pavement, open space preservation, etc.) that will be installed as part of this project. Note: temporary BMPs (e.g., straw waddles, etc.) must be removed prior to submitting your Notice of Termination
INSPECTIONS	
Part IV.H.1	Identify the minimum inspection frequency as well as goals for more frequent inspections
Part IV.H.2.	Provide name, title, and qualifications of person(s) who will be conducting inspections
Part IV.H.3.a	Describe how inspection of the following items will be conducted:
	Good housekeeping BMPs (e.g., solid waste storage and pickup; chemical storage, use, and cleanup; fueling; etc.)
	Erosion and sediment control BMPs
	Construction site entrance and egress location(s) including looking for evidence of sediment, debris, and other pollutants tacked offsite onto paved surfaces (e.g., streets, sidewalks, parking lots, etc)
	Municipal storm sewer systems, including streets, inlets, etc. which can be observed at ground level. Should focus on discharge (and potential for discharge) and accumulation of sediment, trash, and other pollutants
	Observation and assessment of accessible discharge locations to determine if erosion control BMPs are adequate and effective in reducing discharge of sediments
	For discharge points that are inaccessible, inspection of downstream locations should occur, where practicable
Part IV.H.3.b	Describe how inspections will be documented (note: inspection reports must be added to the SWPPP in chronological order, Permit Part IV.H.4)
Part IV.H.3.c	Describe procedures for repairing, replacing, and/or supplementing nonfunctional and underperforming BMPs (see Permit Part IV.I.2)

INSPECTION REPORT	
Part IV.H.4	Provide a copy of the inspection report form to be used to document site inspections. At a minimum, the report form must include the following information (note, an example form is provided in the permit and may be used to satisfy this permit requirement):
	Date of inspection
	Name and title of person(s) conducting the inspection
	Information about weather conditions since the last inspection, including: best estimate of the beginning and end of each rain event; time elapsed since last rain event; and approximate amount of rainfall for each event (in inches)
	Locations where sediment and other pollutants are or were discharged from the site
	For inspections conducted while stormwater can be observed discharging from the site, provide a description of the physical characteristics (e.g., presence of suspended sediment, turbid water, discoloration, oil sheen, etc.)
	Location and identification of BMPs in that need to be maintained, failed to operate, or proved inadequate
	Location(s) where additional BMPs are needed that did not exist at the time of inspection
	Identification of all sources of non-stormwater and the associated pollution prevention control BMPs
	Identification of material storage areas and evidence of or potential for pollutant discharge from such areas
	Corrective actions required, including any changes to SWPPP necessary, and implementation dates (of corrective actions/maintenance, and SWPPP changes)
	Identification of any non-compliance with the conditions of this permit, or where the inspector does not identify any incidents of non-compliance, the inspection report shall contain a certification that the construction project or site is being operated in compliance with the SWPPP and permit
	Certification statement and signature for inspection report in agreement with Part VIII.J.
MONITORING PLAN - (if applicable)	
Part III.C.6	If discharging to impaired water, identify sources of pollutants of concern listed on the 303(d) list that may be potentially discharged through construction site activities and soil disturbances. If these exist, describe added or better BMPs to minimize discharges of these pollutants
Part V.B.1	For projects located within ¼-mile of a unique or impaired water, your SWPPP must include a Monitoring Plan that (at a minimum) contains the following information

	Specific location(s) at the site where visual and analytical monitoring activities will be conducted

The name(s) and titles of the person(s) who will perform the monitoring	
Map showing the segments or portions of the receiving water (stream, lake, etc.) that are most likely to be impacted by the discharge of pollutant(s)	
Water quality parameters/pollutants to be sampled	
The citation and description of the sampling protocols to be used (should include Standard Operation Procedure for sample collection, preservation, etc.)	
Part V.B.1, continued	Identify analytical methods and related method detection limits (if applicable) for each parameter to be monitored
	Identify any special pollutants of concern based on the most recent 305(b)/303(d) listing or other information available
	Describe the potential sources of this pollutant from the project, if any (including disturbances of soil containing this pollutant)
Part V.D.3	If the unique or impaired water is a lake, your monitoring plan (including monitoring locations) must be submitted to and approved by the Department
Part V.D.5	Chain-of-custody (COC) forms including: sampler's name, phone number, date and time of sample collection, sample identification, requested analysis, and project name or number
ADMINISTRATIVE	
Part III.A.3 Part VIII.J.2	Ensure the SWPPP is signed by a person meeting the certification requirements of Permit Part VIII.J
Part III.D.1	Include a copy of AZPDES permit (AZG2008-001) with the SWPPP
Part III.D.2	Include a copy of the completed NOI form that was submitted to ADEQ
Part III.D.3	Include a copy of the authorization certificate received from ADEQ
Part III.D.4	Identify any city or county which received a copy of the authorization certificate
Part III.D.5	Include copies of other agreements with any state, local or federal agencies that would affect the provisions or implementation of the SWPPP, if applicable (404 permits, local grading permits, etc.)

APPENDIX E
AMENDMENTS TO THE IFC 2012

Amendments to the International Fire Code, 2012:

Let it be known that a certain document, three (3) copies of which are on file in the City Clerk's office of the City of Maricopa, being marked and designated as the International Fire Code, 2012 edition including

- Appendix B: Fire flow Requirements for Buildings,
- Appendix C: Fire Hydrant Locations and Distribution,
- Appendix D: Fire Apparatus Access Roads,
- Appendix E: Hazard Categories,
- Appendix F: Hazard Ranking and
- Appendix G: Cryogenic Fluids-Weight and Volume Equivalents as published by the International Code Council, be and is hereby adopted as the Fire Code of the City of Maricopa, in the State of Arizona regulating and governing the safeguarding of life and property from fire and explosion hazards arising from the storage, handling and use of hazardous substances, material, and devices and from conditions hazardous to life or property in the occupancy of buildings and premises herein provided; providing for the issuance of permits and collection of fees therefore; and each and all of the regulations, provisions, penalties, conditions and terms of said Fire code on file in the office of the and hereby referred to, adopted, and made a part hereof, as if fully set out in this resolution, with additions, insertions, deletions, and changes, if any, prescribed in # 2 of this resolution.

1. REVISIONS TO IFC, 2012

   a. Section 101.1 is hereby amended to read as follows:

      Section 101.1 Title: These regulations shall be known as the Fire Code of the City of Maricopa, hereinafter referred to as "this code."

   b. Section 101.2.1 is hereby amended to read as follows:

      Section 101.2.1 Appendices: The following appendices are adopted as part of this code by the City of Maricopa: Appendices B,C,D,E,F & G. Other provisions in the appendices shall not apply.

   c. Section 105.1.1 is hereby amended to read as follows:

      Section 105.1.1 Permits required; fees. It shall be unlawful for any person, firm, or corporation to use a building or premises or engage in any activities for which a permit is determined to be required by the code official without having first obtained such permit. The fees for fire code permits shall be established by the City of Maricopa fire code fee schedule. Permit fees shall be paid prior to issuance of the permit. Issued permits shall be kept on the premises designated therein at all times and shall be readily available for inspection by the fire code official.

   d. Section 105.1.1.1 is hereby added to read as follows:

Section 105.1.1.1 Work commencing before permit issuance; fees. Any person who commences any work on an item requiring a fire code permit before obtaining the necessary permits shall be liable for the cost of the permit, along with an additional assessment equal to the normal assessed permit fees.

e. Section 105.7 is hereby amended to read as follows:

Section 105.7 Required construction permits. The fire code official is authorized to issue construction permits for work as set forth in Sections 105.7.1 through 105.7.15.

f. Section 105.7.14 is added as follows:

Section 105.7.14 Access-controlled egress doors. A construction permit is required to install or modify the connection to the fire alarm system for access-controlled egress doors in accordance with Section 1008.1.3.4.

g. Section 105.7.15 is hereby added as follows:

Section 105.7.15 Delayed egress locks. A construction permit is required to install to the fire alarm system for delayed egress locks in accordance with Section 1008.1.8.6.

h. Section 106.2.1 is hereby added as follows:

Section 106.2.1 Inspection requests: It shall be the duty of the holder of the permit or their duly authorized agent to notify the fire code official when work is ready for inspection. It shall be the duty of the permit holder to provide access to and means for inspections of such work that is required by this code.

i. Section 106.2.2 is hereby added as follows:

Section 106.2.2 Approval required. Work shall not be done beyond the point indicated in each successive inspection without first obtaining the approval of the fire code official. The fire code official, upon notification shall make the requested inspections and shall either indicate the portion of the construction that is satisfactory as completed, or notify the permit holder or the agent wherein the inspection fails to comply with this code. Any portions that do not comply shall be corrected and such portions shall not be covered or concealed until re-inspected and authorized by the fire code official.

j. Section 106.3 is hereby amended to read as follows:

Section 106.3 Concealed work. It shall be the duty of the permit applicant to cause the work to remain accessible and exposed for inspection purposes. Whenever any installation subject to inspection prior to use is covered or concealed without having first been inspected and approved, the fire code official shall have the authority to require that such work be exposed for inspection. Neither the fire code official nor the jurisdiction

shall be liable for expense entailed in the removal or replacement of any material required to allow inspection and all expenses shall be incurred by the permit applicant.

k. Section 106.4 is hereby added to read as follows:

Section 106.4 On-site construction documents. One set of code official approved construction documents shall be on the job site for each inspection. Failure to have approved construction documents on site shall result in canceling the inspection and is subject to assessment of a fee in accordance with the adopted consolidated fee schedule of the City of Maricopa.

l. Section 109.3 is hereby amended to read as follows:

Section 109.3 Violation Penalties. Persons who violate a provision of this code or shall fail to comply with any of the requirements thereof or who shall erect, install, alter, repair, or do work in violation of the approved construction documents or directive of the fire code official, or of a permit or certificate used under provisions of this code, shall be guilty of a Class I misdemeanor punishable by a fine of not less than two hundred and fifty dollars ($250.00) nor more than twenty five hundred dollars ($2,500.00). Each day that a violation continues after due notice has been served shall be deemed a separate offense.

m. Section 111.4 is hereby amended to read as follows:

Section 111.4 Failure to Comply: Any person who shall continue any work after having been served with a stop work order, except such work as that person is directed to perform to remove a violation or unsafe condition shall be liable to a fine of not less than two hundred fifty dollars ($250.00) or more than twenty five hundred dollars ($2,500.00).

n. Section 202 is hereby amended to add the following definitions:

Section 202 STANDBY PERSONNEL. Qualified fire service personnel, whether City employees or otherwise as reasonably approved by the Public Safety Director/Assistant Fire Chief. When utilized, the number required shall be as directed by the Public Safety Director/Assistant Fire Chief. Charges for utilization of city employees as standby personnel shall be as set forth in the City of Maricopa Fee Schedule or as customary.

o. Section 202 SPECIAL FIRE RISK AREA. Land which is covered with grass, grain, brush, refuse or forest, whether privately or publicly owned, which is so situated or is of such inaccessible location that a fire originating upon it would present an abnormally difficult job of suppression or would result in a great or unusual damage through fire or such areas designated by the code official.

p. Section 311.2.2 is hereby amended to read as follows: (deleting Exceptions 1 & 2).

Section 311.2.2 Fire Protection: Fire alarm, sprinkler and standpipe systems shall be maintained in an operable condition at all times.

q. Section 508.3 is hereby amended to read as follows:

Section 508.3 Fire flow: Fire flow requirements for buildings or portions of buildings and facilities shall be determined by an approved method and in accordance with Appendix B. The fire code official shall require an approved independent third party individual or firm to conduct a fire flow test prior to issuance of a certificate of Occupancy.

r. Section 508.3.1 is hereby added to read as follows:

Section 508.3.1 Fire flow verification: The fire code official may require all new buildings or structures to provide fire flow verification according to the requirements in Appendix B. Verification shall be conducted by an approved separate third party certifying the fire flow data.

s. Section 508.5.2.1 is hereby added to read as follows:

Section 508.5.2.1 Water distribution system failure notification: Each water service provider serving areas within the city, whether municipal or private, shall notify the Fire Department of any failure in their water distribution system, hydrant repair main breaks, pump failures, or other interruptions of water supply that may affect water supply for fire control purposes as soon as possible.

t. Section 508.5.2.2 is hereby added to read as follows:

Section 508.2.2 Out of service hydrants: Any hydrant that is out of service shall have an out of service ring located on the largest diameter discharge and shall remain in place until the hydrant is operational and verified by the Fire Department.

u. Section 903.2.1.1 is hereby amended to read as follows:

i. Section 903.2.1.1 Group A-1. An automatic sprinkler system shall be provided for Group A-1 occupancies.

ii. Section 903.2.1.2 Group A-2. An automatic sprinkler system shall be provided for Group A-2 occupancies.

v. Section 903.2.1.3 is hereby amended to read as follows:

Section 903.2.1.3 Group A-3. An automatic sprinkler system shall be provided for Group A-3 occupancies.

w. Section 903.2.1.4 is hereby amended to read as follows:

Section 903.2.1.4 Group A-4. An automatic sprinkler system shall be provided for Group A-4 occupancies.

x. Section 903.2.2 is hereby amended to read as follows:

Section 903.2.2 Group E. An automatic sprinkler system shall be provided for Group E occupancies.

y. Section 903.2.3 is hereby amended to read as follows:

Section 903.2.3 Group F-1. An automatic sprinkler system shall be provided throughout all buildings containing Group F-1 occupancy.

z. Section 903.2.6 is hereby amended to read as follows:

Section 903.2.6 Group M. An automatic sprinkler system shall be provided throughout all buildings containing Group M occupancy.

aa. Section 903.2.7 is hereby amended to read as follows:

i. Section 903.2.7 Group R. An automatic sprinkler system installed in accordance with Section 903.3 shall be provided throughout all buildings with a Group R fire area.

ii. Exception #1. Automatic sprinkler systems shall not be required in R-3 occupancies of 5,000 square feet or less.

iii. Exception #2. Congregate living facilities with 5 or fewer persons.

bb. Section 903.2.8 is hereby amended to read as follows:

i. Section 903.2.8 Group S-1: An automatic sprinkler system shall be provided throughout all buildings containing Group S-1.

ii. Section 903.2.8.1 is hereby deleted:

iii. Section 903.2.8.2 is hereby deleted:

iv. Section 903.2.9 is hereby added:

v. Section 903.2.9 Group S-2. An automatic sprinkler system shall be provided throughout all buildings containing a Group S-2 occupancy.

cc. Section 903.2.13.1 is hereby added to read as follows:

i. Section 903.2.13.1 Group B. An automatic sprinkler system shall be provided throughout buildings containing a Group B occupancy.

ii. Exemption #1. Temporary modular sales offices for the intended use of residential sub-division home sales provided adequate fire flow is available according to Section 508 and Appendix B of the 2012 IFC as amended.

iii. Exemption #2. Temporary modular construction offices for the intended use of specific residential sub-division or commercial development sites provided

adequate fire flow is available according to Section 508 and Appendix B of the 2012 IFC as amended.

dd. Section 903.2.13.2 is hereby added to read as follows:

Section 903.2.13.1 Group F-2. An automatic sprinkler system shall be provided throughout all buildings containing a Group F-2 occupancy.

ee. Section 903.2.13.3 is hereby added to read as follows:

One and Two Family Dwellings as referenced in the International Residential Code (Scope R101.2 provisions). An automatic sprinkler system shall be provided for all one and two family dwellings greater than 5,000 square feet as set forth under the provisions of the International Residential Code Scope R101.2.

ff. Section 903.3.5 is hereby amended to read as follows:

Section 903.3.5 Water supplies. Water supplies for automatic sprinkler systems shall comply with this section and the standards referenced in Section 903.3.1. The potable water supply shall be protected against backflow in accordance with the requirements of this section and the International Plumbing Code. Automatic sprinkler systems water supply data for hydraulic calculations shall be based on a curve that is 90 percent of the available water supply curve as determined by flow test information.

gg. Section 903.3.7 is hereby amended to read as follows:

Section 903.3.7 Fire Department connections. The fire department connection (FDC) shall be a separate approved line that connects to the sprinkler riser above the control valve. The location of fire department connections shall be approved by the fire code official and, unless shown to the fire code official to be adequate based on unique circumstances to the development, be located within 150 feet of a hydrant.

hh. Section 903.7 is hereby added to read as follows:

Section 903.7 Protection and security of sprinkler systems. All fire sprinkler risers shall be secured and protected from the environment and being located inside the building or structure with a direct exterior access.

ii. Section 904.11.6.6 is hereby added to read as follows:

Section 904.11.6.6 Additions, alterations or repairs. Existing automatic fire extinguishing systems shall be upgraded to an approved fire extinguishing system, installed throughout all portions of any commercial cooking system when there are additions, alterations or

repairs made when an existing non-compliant system can no longer be serviced and maintained in a certified operational condition.

jj. Section 907.10.3 is hereby added to read as follows:

i. Section 907.10.3 Interior Tenant Notification. Interior Tenant Notification shall be provided when monitoring of the fire sprinkler system is provided.

ii. Shell Buildings: 1 (one) horn strobe shall be installed and operational within the interior space prior to final. When demising walls are present, 1 (one) horn-strobe shall be installed for each space. Multi-story buildings shall require a minimum of 1 (one) horn-strobe per level.

iii. Tenant Improvements (Shell build-outs): 1 (one) horn-strobe shall be provided for each individual tenant. When a common area is provided serving multiple tenants, a minimum of 1 (one) horn-strobe in the common area shall be provided.

iv. These requirements may be increased based on occupancy type or if reasonably necessary for adequate protection of life safety as determined by the fire code official.

kk. Section 2701.5.1 is hereby amended to read as follows:

Section 2701.5.1 Hazardous Materials Management Plan: Where required by the fire code official, each application for a permit shall include an electronic Hazardous Materials Management Plan (HMMP) in a format acceptable to the fire code official. The HMMP shall include a facility site plan designating the following:

i. Storage and use areas.
ii. Maximum amount of each material stored or used in each area.
iii. Range of container sizes.
iv. Locations of emergency isolation and mitigation valves and devices.
v. Product conveying piping containing liquids or gases, other than utility owned fuel gas lines and low-pressure fuel gas lines.
vi. On and off positions of valves for valves that are of the self-indicating type.
vii. Storage plan showing the intended storage arrangements, including the location and dimension of aisles.
viii. The location and type of emergency equipment. The plans shall be legible and drawn approximately to scale. Separate distribution systems are allowed to be shown on separate pages.

ll. Section 2701.5.2 is hereby amended to read as follows:

Section 2701.5.2 Hazardous Materials Inventory Statement (HMIS): Where required by the fire code official, an application for a permit shall include an electronic HMIS in a format acceptable to the fire code official. The HMIS shall include the following information:

i. Manufacturer's name.

ii. Chemical name, trade names, hazardous ingredients.
iii. Hazard classification.
iv. MSDS
v. United Nations (UN), North America (NA) or the Chemical Abstract
vi. Service (CAS) identifications number.
vii. Maximum quantity stored or used on-site at one time.
viii. Storage conditions related to the storage type, temperature and pressure.

mm. In addition to the requirements of the 2012 International Fire Code, an approved automatic sprinkler system shall be installed in all expanded, remodeled, and newly constructed buildings with a total floor area of greater than zero (0) square feet.

i. Exception 1: Group R-3 Occupancies (One and Two Family Dwellings as referenced in the International Residential Code Scope R101.2) and Group U Occupancies.

ii. Exception 2: All additions to existing buildings or structures and all buildings or structures that are expanded by an addition(s) shall be provided with an automatic fire protection system complying with 903.3 with the following exception(s):

An existing non-sprinkled building or structure and addition(s) to such existing building, provided the occupancy of the existing building is not changed, the addition is the same occupancy, and the total area of all such additions to the building do not exceed one thousand (1,000) square feet.

"The above exception does not supersede other requirements of this chapter or the City of Maricopa Fire Code."

nn. If a conflict occurs between the requirements of the building code or the fire code and this section, the most stringent requirement shall apply.

oo. Section 3204.3.1.1 is hereby amended to read as follows:

3204.3.1.1 Location. Stationary containers shall be located in accordance with Section 3203.6. Containers of cryogenic fluid shall not be located within diked areas containing other hazardous materials.

pp. Section 3404.2.9.5.1 is hereby amended to read as follows:

(3404.2.9.5.1) Location where above ground tanks are prohibited. Storage of Class I and II liquids in above-ground tanks is prohibited within the city limits established by City of Maricopa Zoning Code.

qq. Section 3406.2.4.4 is hereby amended to read as follows:

(3406.2.4.4) Locations where above ground tanks are prohibited. The Storage of Class I and II liquids in above-ground tanks is prohibited within the limits established by City of Maricopa Zoning Code.

rr. Section 3804.2 is hereby amended to read as follows:

(3804.2) Maximum capacity within established limits. Within the limits established by the City of Maricopa Zoning Code restricting the storage of liquefied petroleum gas for the protection of heavily populated or congested areas, the aggregate capacity of any one installation shall not exceed a water capacity of 2000 gallons (7570L).

ss. That Resolution No. _____ of the City of Maricopa adopting the 1997 Uniform Fire Code and all other resolutions or parts of resolutions in conflict herewith are hereby repealed.

tt. That if any section, subsection, sentence, clause or phrase of this resolution is, for any reason, held to be unconstitutional, such decision shall not affect that validity of the remaining portions of this resolution. The City of Maricopa hereby declares that it would have passed this resolution, and each section, subsection, clause or phrase thereof, irrespective of the facts that any one or more sections, subsections, sentences, clauses and phrases be declared unconstitutional.

uu. That nothing in this resolution or in the Fire Code hereby adopted shall be construed to affect any suit or proceeding impending in any court, or any rights acquired, or liability incurred, or any causes of action acquired or existing, under any act or resolution hereby repealed as cited in # 4 of this resolution: nor shall any just or legal right or remedy of any character be lost, impaired, or affected by this resolution.

vv. That the Public Safety Director/Assistant Fire Chief or senior fire official hereby ordered and directed to cause this resolution to be published in a newspaper or general circulation.

ww. That this resolution and the rules, regulations, provisions, requirements, orders and matters established and adopted hereby shall take effect and be in full force and effect May 6th, 2008.

xx. Appendices: NO CHANGES MADE TO APPENDICES

APPENDIX F
FIRE DEPARTMENT REQUIREMENTS AND INFORMATION

Fire Department Requirements and Information:

1. GENERAL NOTES TO THE CONTRACTOR
   a. The acceptable plan size shall be limited to 24" x 36".
   b. All buildings (except Group R, Division 3 [see below] Group S-2 greater than 1,500 s.f. and Group U occupancies) shall be equipped with an approved automatic fire sprinkler system installed in accordance with Fire Code, NFPA 13, and City of Maricopa Fire Code amendments.
   c. One (1) set of stamped and approved drawings shall be kept on-site and made available to City Inspectors on demand.
   d. The Contractor shall provide the City Inspector with a copy of the following items upon successful completion of the system and prior to City acceptance of the system.
      1. The "Contractor's Material and Test Certificate for Aboveground Piping," in accordance with NFPA 13.
      2. The "Contractor's Material and Test Certificate for Underground Piping," in accordance with NFPA 24.
      3. The "Certificate of Compliance" for fire alarm systems in accordance with NFPA 72; upon success.
2. AUTOMATIC SPRINKLERS
   a. Fire protection systems shall be installed or modified by a contractor licensed to perform such work in the State of Arizona.
   b. Automatic Sprinkler systems shall be supervised by an approved, proprietary, or remote signal station service; or an audible signal shall sound at a constantly attended location when the number of sprinklers heads is 20 or more in Group 1, Division 1 occupancies or 100 or more sprinkler heads in all other occupancies.
3. FIRE DEPARTMENT ACCESS ROADWAYS (TEMPORARY)
   a. Fire Department Access Roadways shall be constructed and maintained to support the loads of fire apparatus throughout construction.
   b. Fire Department Access Roadways shall be a minimum of 20 feet clear width with minimum six (6) inches of 95% compacted AB. The road surface shall provide all – weather access to the site.
   c. No trenching across Fire Department Access Roadways is permitted. Required water fire flow shall be provided and maintained throughout construction.
   d. Fire Department Access Roadways shall be designed to remain opened at all times and be constructed in a manner that is satisfactory to the Division of Fire Prevention.
   e. The necessary turning radius for Temporary Fire Department Access Roadways is 26 feet inside radius and 48.5 feet outside radius for clear mobility.

4. FIRE DEPARTMENT CONNECTION (FDC)

a. Fire Department Connections (FDC's) for Fire Code, Building Code, and NFPA 13 Fire Sprinkler Systems shall be two, 2- ½ inch, national standard thread, female swivels. FDC's for NFPA 13D and 13R sprinkler systems shall be single 1- ½ inch, national standard thread female swivels with approved non-locking metal caps.

b. FDC's shall be red in color with 2-inch high white letters and numbers. FDC's serving multiple buildings shall be signed with the premise address on a sign. The sign shall be 10 inches by 8 inches, red in color with white 2-inch letters or numbers. See F.D. Details. The signs shall include address (1234-46) of the premise(s) served by the FDC and shall be 0.08 gage aluminum. The sign shall be securely attached to the FDC check valve with "U" type bolts or other means as to secure and not bend the sign.

c. FDC's for Multi-Family (R-1) shall be 1-1/2 inch female swivel connections located on the building under the audio/visual (horn/strobe) device for the building. PIV's shall be signed in accordance with F.D. Details on the PIV as either riser or sectional control. All riser control PIV's shall include the address of the premise(s) served. PIV's shall be red in color with 2-inch high white letters and numbers.

d. All Fire Department hose stations and standpipe hose discharges for Fire Department use shall be 2- ½ inch, national standard thread, and female swivels. No hose shall be attached to Fire Department hose stations.

e. The Fire Department Connection (FDC) must be installed remotely and shall be so located that fire apparatus and hose connected to the supply system will not obstruct access to the building for other fire apparatus.

f. The FDC shall be located on the street side of the building, fully visible and recognizable from the street or nearest point of Fire Department vehicle access.

g. The FDC shall be located within 150 feet of a fire hydrant connected to a public water main.

h. The FDC shall be located not less than six (6) feet or not more than 150 feet from an approved Fire access roadway or driveway.

i. A three (3) foot clearance measured from the center of the FDC shall be maintained around the connection. There shall not be any type of landscaping such as bushes, trees, cactus or river rock within three feet of the connection or between the curb and the FDC.

j. The FDC shall not be located within a retention area or behind walls.

k. FDC inlets shall be located 36 inches above the finished grade.

l. The FDC shall be painted brilliant red.

m. The FDC location shall be approved by the Division of Fire Prevention.

5. BUILDING REVIEW GUIDE FOR BUILDING PLANS

Project Name: _____

Project Address: _____

Contact Person: _____

Contractor: _____

Contact Phone Number: _____

Building and life safety installation information shall be provided on the appropriate architectural drawings. A copy of this guide shall be attached to submitted drawings. A review will not be conducted without this guide being submitted with the drawings.

The following items shall be included on the drawings. Place an "X" in the box for items that have been included with the drawings. Circle the box for items that are not required by the Code or are not applicable to this project.

- ☐ Fire Department "General Notes to the Contractor" are provided on the plan.
- ☐ The Building Code occupancy classification of each area and/or room within the building is indicated on the floor plan.
- ☐ The plan indicates the location and signage of the approved address in accordance with Fire Department standard details.
- ☐ Fire Department key boxes are located at the front entrance to the building.
- ☐ Key operated switches (if required) are located on all electric gates on a separate pedestal or on the front of the access box.
- ☐ A pre-emption device is located on all electric gates and is facing the Fire Department approach to the gate.
- ☐ The plans indicate the locations of all required Fire Doors and a detail or note for signage is provided.
- ☐ The location, size, and class of all required portable extinguishers are provided on the plans.
- ☐ The locations and identity of all fire sprinkler risers, fire standpipe hose outlets (NO hoses attached), fire alarm control panels, and fire alarm enunciator panels are provided on the plans.
- ☐ Fire protection systems needing analysis describing fire detection, fire alarm, and fire extinguishing systems required by the building and fire codes is provided on the plans.
- ☐ The location and identity of fixed equipment, machinery, or devices specifically regulated by the fire code are indicated on the floor plans.

- ☐ The location, height, width, construction type, commodity class, and aisle width for warehouse or storage areas with rack storage or high piled storage is provided on the plans.

If applicable, attach or indicate on the drawings the following information regarding the storage, use, or handling of hazardous materials:

- ☐ Attach a completed electronic Hazardous Materials Inventory Statement (HMIS).
- ☐ Place a note on the drawing that describes the exterior hazardous materials storage secondary containment and/or treatment systems.
- ☐ Indicate on the drawing the capacity, contents, and property setback lines for the site.

Indicate any of the following activities or processes that apply to the building:

- ☐ Place of assembly
- ☐ Bowling Alley
- ☐ Automotive, Junk, or Waste Material Handling
- ☐ Covered Mall Building
- ☐ Aviation Facilities
- ☐ Dry cleaning
- ☐ Combustible dust producing operations
- ☐ Flammable finishes
- ☐ Fruit and crop ripening
- ☐ Fumigation and thermal insecticide fogging
- ☐ Semiconductor fabrication facilities
- ☐ Lumber yards and woodworking facilities
- ☐ Manufacture of organic coatings
- ☐ Industrial ovens
- ☐ Motor fuel dispensing facilities and repair garages
- ☐ High piled combustible storage
- ☐ Tire rebuilding and tire storage
- ☐ Welding and other hot work
- ☐ Hazardous materials- general provisions
- ☐ Aerosols
- ☐ Combustible fibers
- ☐ Compressed gases
- ☐ Corrosive materials
- ☐ Cryogenic fluids

- ☐ Explosives and fireworks
- ☐ Flammable and combust able liquids
- ☐ Flammable gases
- ☐ Flammable solids
- ☐ Highly toxic and toxic materials
- ☐ Liquefied petroleum gases
- ☐ Organic peroxides
- ☐ Oxidizers
- ☐ Pyrophoric materials
- ☐ Pyroxylin (cellulose nitrate) plastic
- ☐ Unstable (reactive) materials
- ☐ Water reactive solids and liquids
- ☐ The Electronic Hazardous Materials Inventory Statement must be completed for plan review and must be submitted with the construction drawings to Building Safety. The electronic version will be imported into Fire Department software. The Fire Department uses software from Encompsol. The HMIS may be submitted in any format as long as it will import in the Fire Departments software. Encompsol can be contacted at www.encompsol.com for information on acceptable formats.

6. REVIEW GUIDE FOR SITE PLANS

Project Name: _____

Project Address: _____

Contact Person: _____

Contractor: _____

Contact Phone Number: _____

Site plans submitted for review and approval shall contain the following information.

The following items shall be included on the drawings. Place an "X" in the box for items that have been included with the drawings. Circle the box for items that are not required by the Code or are not applicable to this project.

- ☐ Fire Department "General Notes to the Contractor" are provided on the plan.
- ☐ Fire lane sign locations and the sign details are shown on the drawing.
- ☐ All gates or barriers that limit 24-hour access to the site are shown on the plans. All key switch and pre-emption locations are shown on the drawing.
- ☐ All of the required fire lanes, emergency access roadways, and emergency vehicle turnarounds are outlined, with dimensions marked and identified on the drawings.

7. EMERGENCY SITE ACCESS

Project Name: _____

Project Address: _____

Contact Person: _____

Contractor: _____

Contact Phone Number: _____

Site plans submitted for review and approval shall meet the following Emergency site access criteria.

The following items shall be included on the drawings. Place an "X" in the box for items that have been included with the drawings. Circle the box for items that are not required by the Code or are not applicable to this project.

- ☐ All projects shall have an emergency/secondary means of access as remote as possible from the primary access to the site or as directed by the Division of Fire Prevention.
- ☐ Projects with a boulevard entry (median separated ingress/egress) may apply for an exemption in writing from the Fire Department. The Fire Department will determine whether to grant such exemption based on the width of the ingress/egress, width of the median, size of the project, distance of the farthest point of the project from the street and/or fire hydrant, amount of frontage and other factors affecting the ability of police, fire and other emergency equipment to respond to or evacuate the project.

Emergency access gate(s) shall meet the following Fire Department criteria:

- ☐ Electrically operated gates installed across the required fire apparatus access roadways shall be provided with pre-emption devices and a key switch. The gate(s) with the pre-emption device shall remain open for 30 minutes after the first unity enters to allow other units or ambulances to enter during emergencies.
- ☐ Non-electric gates for other than primary entrances can be padlocked and chained if the padlock is accessible from both sides of the gate.
- ☐ An entrance code shall be provided to Southwest Ambulance, the Maricopa Police Department, and the Pinal County Sheriff's Office.
- ☐ The Fire Department will have the final approval for emergency access to ensure the best possible safety ingress/egress for the site.

8. KEY BOX AND SWITCH REQUIREMENTS

Project Name: _____

Project Address: _____

Contact Person: _____

Contractor: _____

Contact Phone Number: _____

The following items shall be included on the drawings. Place an "X" in the box for items that have been included with the drawings. Circle the box for items that are not required by the Code or are not applicable to this project.

KEY BOX REQUIREMENTS

Criteria to shown on plans for the Key Box Locations:

- ☐ A key box is required when the fire sprinkler riser control and/or a fire alarm system is located inside the building.
- ☐ The key box shall be located at the front entrance to the facility with an additional key box located at the riser room if the building is greater than 10,000 sq. ft.
- ☐ The top of the key box is to be located no more than five (5) feet up on the wall from the finished grade or as designated by the Fire Marshal.
- ☐ The key box must be easily visible from the closest fire access road.
- ☐ Red sticker is to be located on the door that the key fits.
- ☐ Any alternate locations must be approved by the Fire Marshal. A sign shall be posted at the front door stating where the key box is located when the key box is not at the front entrance.
- ☐ An application for a key box may be obtained from the Division of Fire Prevention.

KEY SWITCH AND PRE-EMPTION DEVICE REQUIREMENTS

Criteria to be shown on the plans for key switch locations:

- ☐ A key switch is required on all electric access gates.
- ☐ A pre-emption device is required to automatically open all electric gates upon the arrival of fire apparatus.
- ☐ Electrical plans showing the panel locations, size and type of conduit, conduit routing, conductor size, type of over current protection and location of disconnecting means.
- ☐ Two (2) copies of cut sheets are to be provided for the electric gate operation device.
- ☐ Electric gates are to remain open for 30 minutes after emergency activation.

9. PLAN REVIEW GUIDELINE FOR UNDERGROUND FIRE LINES

Project Name: _____

Project Address: _____

Contact Person: _____

Contractor: _____

Contact Phone Number: _____

Underground fire line installation information shall be provided on the appropriate civil drawings. A copy of this guide shall be attached to the submitted drawings. A review will not be conducted without this guide being submitted with the drawings. All such work shall be performed by a contractor licensed by the State of Arizona to do such work.

The following items shall be included on the drawings. Place an "X" in the box for items that have been included with the drawings. Circle the box for items that are not required by the Code or are not applicable to this project.

☐ Fire Department "General Notes to the Contractor" are provided on the plan.

A Detector check valve assembly for the underground fire line is installed because there is a capability for on-site, private fire hydrants or other means of flowing water without sounding an alarm.

Yes ❑

No ❑

The plans are drawn to scale and include the following:

- The size and location of city water main(s) that supply the underground fire line(s).
- The type, class, depth or burial, size, and location of all new underground fire line piping.
- The locations and type of on-site fire hydrants.
- The locations of fire sprinklers and/or standpipe risers, and monitor nozzles (if any) that are to be supplied by the underground fire lines.
- The location and distance dimensions to all existing fire hydrants on all mains within 300 feet of the site property lines.
- The plans indicate that the number and distribution of fire hydrants available for the site and building(s) are in accordance with fire Department standards.
- The plans indicate that the underground fire lines are not located within retention basins.

The plans indicate that the maximum lengths of the underground fire line do not exceed the following:

- Six (6) inch diameter dead end lines shall not exceed 300 feet in length.
- Eight (8) inch diameter dead end lines shall not exceed 1200 feet in length.
- Six (6) inch looped lines shall not exceed 1200 feet in length.

The plans must indicate that the fire pipe is one of the following:

- DIP Class 350 pipe.
- PVC c-900, 150 psi pipe
- PVC c-905, 235 psi pipe
- The plans must indicate that a metallic warning tape shall be installed in accordance with the manufacturer's installation instructions when non-metallic piping is used for underground fire lines.
- The plans include the appropriate fire line connection detail for back flow prevention assemblies, underground check valves, fire department connections, and post indicating valves.

The plans indicate that all fire line control valves:

- Are of the indicating type
- Are above ground
- The top of the valve housings are 36 inches above clearance around PIV finished grade.
- Are color coded and signed in accordance with Fire Department Standards.
- Maintain three (3) feet of clearance around the PIV (no trees, bushes, fences, cactus, or river rock.)
- The plans indicate that all fire line backflow prevention assemblies, underground check valves, fire department connections, and fire line control valves are located within landscaped or planter areas.
- The plans indicate that looped underground fire lines are provided with sectional control valves installed at appropriate locations to permit isolation of the system of the event of a break, to facilitate repairs, or extensions to the system.
- The plans indicate that all stub out or future connections on underground lines shall terminate with post indicator valves only.

The plans indicate that Siamese fire department connections are installed as follows:

- A minimum of one fire department connection is provided for single underground fire lines supplying a single riser.
- A minimum of two (2) fire department connections, located remote from each other, are provided for looped underground fire lines supplying multiple risers. More than two (2) fire department connections may be required as determined by plan review.

The plans indicate that the fire department connections meet the following criteria:

- They are located on private property six (3) to ten (6) feet behind the curbs of a permanent entrance to the site or as directed by the Division of Fire Prevention.
- They will not obstruct public or private sidewalks.
- They are located within a landscaped or planted area.
- They are located within 150 feet of a fire hydrant connected to a public water main.
- They are signed in accordance with Fire Department requirements.
- They are not located within retention areas or behind walls.
- A three (3) foot clearance is maintained around the connection. There is to be no landscaping, bushes, trees, cactus, or river rock.
- The plans indicate that tapping sleeves are not to be used on any portion of the underground fire line downstream of the underground check valve or backflow assembly.
- The plans indicate that uni-flange devices are not installed on above ground piping.
- The plans indicate that all system components are listed or approved for fire protection use by an approved testing agency.

10. PLAN REVIEW GUIDE FOR FIRE SPRINKLER SYSTEMS

Project Name: _____

Project Address: _____

Contact Person: _____

Contractor: _____

Contact Phone Number: _____

Fire sprinkler installation information shall be provided on the appropriate architectural drawings. A copy of this guide shall be attached to the submitted drawings. A review will not be conducted without this guide being submitted with the drawings. All such work shall be performed by a contractor licensed by the State of Arizona to do such work.

The following items shall be included on the drawings. Place an "X" in the box for items that have been included with the drawings. Circle the box for items that are not required by the Code or are not applicable to this project.

- ☐ Two sets of plans shall be required, (1) job site and (1) Fire Department.
  - Fire Department "General Notes to the Contractor" are provided on the plan.
- ☐ Indicate the type of system to be installed:
  - NFPA 13 ❑ 13R ❑ 13D ❑ Other ❑
- ☐ Check yes or no for the following items:
  - Yes ❑ No ❑ will there be an in-rack, bin, or high piled storage inside the building?
  - Yes ❑ No ❑ will there be any storage of flammable and/or combustible liquids within the building?
  - Yes ❑ No ❑ will there be any use, dispensing, or mixing of any hazardous materials other than flammable or combustible liquids inside the building?
- ☐ Plans shall be drawn to an indicated scale, on sheets of uniform size, with a plan of each floor, and shall show those items from the following list which pertain to the design of the system.
- ☐ Name of the owner and occupant.
- ☐ Name and address of the contractor.
- ☐ The location, including the correct street address.
- ☐ Points of compass.
- ☐ Full height cross-section.
- ☐ Ceiling construction.

- ☐ Fire wall locations.
- ☐ Partition wall locations.
- ☐ Fire door locations.
- ☐ Unprotected window openings.
- ☐ Large unprotected floor openings.
- ☐ Location and dimensions of the following:
    - o Concealed spaces
    - o Bathrooms
    - o Attics
    - o Closets
- ☐ Any small enclosures in which no sprinklers are to be installed.
- ☐ A legend list with descriptions.
- ☐ Detail of the connection to the underground fire line.
- ☐ The shape of the design area.
- ☐ A sprinkler head table listing the manufacturer, model, orifice size, temperature, rating, protection area for each head type, and number of sprinklers heads per riser on each floor.
- ☐ Detail to the connection to the underground fire line.
- ☐ The following in a "Design Criteria" box:
    - o Hazard class
    - o Design density
    - o Design area in square feet
    - o Number of sprinklers in design area
    - o Water supply data:
        - ▪ test date and location
        - ▪ flow psi and gpm
        - ▪ residual psi
        - ▪ static psi
- ☐ Hose stream and in-rack sprinkler water allowance
- ☐ System demand
        - ▪ psi at riser
        - ▪ gpm at riser
- ☐ Pipe type and schedule of wall thickness.
- ☐ Type and location of hangers, sleeves, braces, and methods of securing sprinklers.
- ☐ City main size and system elevation relative to flow test hydrant.
- ☐ The building code occupancy class of each area or room in the building is indicated on the drawings.
- ☐ Sprinkler heads are positioned no further from a wall than one-half the allowable distance between sprinklers.

- ☐ The clear space below sprinklers and sprinkler heads is in accordance with NFPA 13.
- ☐ The placement, location, and contents of the spare sprinkler head cabinet is indicated on the drawings.
- ☐ The type and locations of all control valves, check valves, and main and auxiliary drains are indicated and identified on the drawings.
- ☐ The location and size of the inspector test valve is indicated on the drawings.
- ☐ The maximum floor area on any single floor, served by an individual riser, does not exceed NFPA 13 allowances.
- ☐ The location and type of local water flow alarm is indicated on the drawings.
- ☐ Cut sheet literature describing all components are included as attachments; or component manufacturer, make, and model data is included on the drawings when the components are listed in the Underwriters Laboratory Inc. "Fire Protection Equipment Directory."
- ☐ Sprinkler system installation under existing combustible roofs or canopies exceeding four (4) feet in width attached to the building is indicated on the drawings.
- ☐ Sprinkler head installation under ducts (more than four feet in width) is indicated on the drawings.
- ☐ Fire hose valves and stations (when required or provided) are spaced that all protected areas are within thirty feet of a nozzle when attached to not more than 100 feet of hose. Fire hose valves shall be 2 x 2 ½ male connections (NST) with gate valve. No hose shall be attached.
- ☐ A detail of the hydraulic data nameplate is included on the drawings.
- ☐ Calculations for hydraulically calculated systems contain the data required in accordance with NFPA 13.
- ☐ Pursuant to the Board of Technical Registration guidelines adopted March 13, 1989; sprinkler system design criteria have been accomplished by a registrant; and the submittal bears the registrant's seal. Approved seals shall be that of Level III NICET, Certified Engineering Technician (CET) or an Arizona Registered Professional Engineer.

11. Plan Review Guide for Fire Alarm Systems

Project Name: _____

Project Address: _____

Contact Person: _____

Contractor: _____

Contact Phone Number: _____

Fire alarm system installation information shall be provided on the appropriate architectural and electrical drawings. A copy of this guide shall be attached to the submitted drawings. A review will not be conducted without this guide being submitted with the drawings.

The following items shall be included on the drawings. Place an "X" in the box for items that have been included with the drawings. Circle the box for items that are not required by the Code or are not applicable to this project. Two sets of plans shall be required, (1) job site and (1) Fire Department.

- ☐ Fire Department "General Notes to the Contractor" are provided on the plan.
- ☐ Two (2) copies of the site plan approved by the City of Maricopa.

Equipment locations and a floor plan showing the following:

- Location dimensioning of devices (pull stations, tamper switches, detectors, etc…)
- Location dimensioning of appliances (bells, horns, etc…)
- Type of device and appliance.
- Control location(s) (FACP, enunciators, transmitters, transponders, ETC…)
- Type of control
- Ceiling shape and surface cross section or note at detector locations (level shape, smooth surface, etc…)
- A symbol list (with equipment identification) showing the following:
- Symbols used on drawings
- Symbol description
- Device manufacturers, make, and model number.
- Linear foot detector rating for spacing in "high air movement areas" if applicable.

An elementary wiring (riser) diagram showing the following:

- Arrangement of all devices and appliances with respect to control units and FACP

- Typical data on the following:
- Control Panel
- Power supply circuit
- Alarm initiating circuit
- Ancillary functions (HVAC Shut down, Elevator recall, etc…)
- Zone configuration and identification (as it will appear on FACP and/or enunciator for each zone.
- System primary and secondary/stand-by electrical:
- Power source and voltage
- Connection to the system
- Electrical power to the system
- Alarm circuit load consumption of all circuits to include:
- Voltage drop
- Acceptable limits
- Quantity of signaling appliances on furthest circuit and resistance of wire or a note specifying the maximum circuit length.

A point-to-point system wiring diagram showing the following:

- The interconnection of all devices and appliances.
- External connection of modules in the control panel
- Conduit connection and size
- Type, size, manufacturer's name and approved list of wire or cable.
- Detector protection in air/heat ducts
- Detector activation of magnetic door releasing hardware
- Detector/fire alarm system activation of HVAC shutdown
- Fire sprinkler supervisory/tamper switch connection to the fire alarm system.
- Sprinkler tamper switch is to cause light and buzzer indication at the enunciator panel and at the remote supervision site when such site is required. Activation of the tamper alarm shall not cause the operation of doors, chimes, bells, or sprinkler flow alarm

☐ An information plate reading "LOCAL ALARM ONLY- THIS ALARM DOES NOT SUMMON THE FIRE DEPARTMENT – IN CASE OF FIRE CALL FIRE DEPARTMENT AT 9-1-1"

☐ Fire alarm system voice speakers / audible devices shall not be used for purposes other than evacuation unless allowed by code.

☐ Emergency telephone with individual cabinets for use by the Fire Department of other emergency responders is installed.

- ☐ The alarm enunciator shall be positioned in a location approved by the Fire Department.
- ☐ If there will be any storage use, handling, dispensing, or mixing of any hazardous materials, flammable liquids, or combustible liquids inside the building items 17 – 23 must be completed.
- ☐ A manual pull station or an approved emergency signal device is shown outside of each interior exit door of the hazardous material storage buildings, rooms, or areas.
- ☐ Activation of the manual pull station or device shall sound a local alarm.
- ☐ The manual alarm, emergency signal, detection or automatic fire extinguishing systems (including fire sprinklers) shall be supervised by an approved central, proprietary or remote station service; or shall initiate an audible and visual signal at constantly attended location.
- ☐ A smoke detection system shall be provided in rooms or areas where highly toxic compressed gases are stored indoors, and activation shall sound a local alarm.
- ☐ A smoke detection system shall be installed in all liquid and solid oxidizer storage areas (except when stored in a detached storage building(s) with an automatic fire extinguishing system) and shall sound a local alarm.
- ☐ An approved automatic smoke detection system shall be provided when the amount of hazardous materials stored, dispensed, handled, or used in one control area exceeding exempt amounts specified in the Fire Code.
- ☐ When the hazardous materials rated 3 or 4 in accordance with the Fire Code are transported through exit corridors or exit enclosures, there shall be an emergency telephone system, a local manual alarm or an approved signaling device at not more than 150-foot intervals and at each exit doorway throughout the transport route. The system shall initiate a local audible alarm and the signal shall be relayed to an approved central, proprietary, or remote station or a constantly attended location.
- ☐ Functions to take place upon the operation of devices
- ☐ A battery calculation sheet (with values used) showing that battery power is sufficient to maintain a minimum of 24 hours of standby power and 5 minutes of alarm power.
- ☐ A separate and signed report advising that the following system requirements have been met:
    - o The system has been designed to meet all applicable Fire Code and NFPA requirements.
    - o That all system components are compatible and are listed or approved as such.
    - o That all of the calculations for the following items are complete, accurate, and adequate:
        - ▪ Voltage drop of circuits
        - ▪ Current protection
        - ▪ Standby and alarm battery calculations

- That the system has alarm verification features in accordance with NFPA 72

Cut sheet literature describing devices, controls, appliances, and other equipment, to include, but not limited to information on the following:

- ☐ Device, appliance, and equipment ratings and spacing requirements.
- ☐ Device, appliance, and equipment compatibility.
- ☐ Listings/approvals.
- ☐ Device, appliance, and equipment features to be used in the system.

12. STANDARD PRE-SITE TECHNICAL REVIEW COMMENTS

a. Use Fire Department Plan Review Guides for specific technical requirements. Completed guides are required to be submitted with plans.

b. Required water fire flow shall be provided and maintained throughout construction and prior to any combustibles being brought on site. Fire apparatus access roadways shall be provided and maintained throughout construction.

c. The site shall be provided with a private looped underground fire line to supply water to all building fire sprinkler systems on site.

d. Underground water fire line installations shall be coordinated with fire protection installation requirements for the remainder of the site. Future PAD installations shall be in accordance with current City Standards for underground fire lines and backflow devices for the entire site.

e. FDC's shall be easily visible from the main access road and shall be located at the primary entrances to the sites. Hydrant and FDC shall be on same side of drive to prevent access from being blocked.

f. FDC's shall be located within 150 feet of a fire hydrant.

g. Fire Department connection shall be located at least 36 inches away from Post Indicating Valves (PIV's) and 18 inches from O. S. & Y. valves. FDC shall be installed such that the top of the FDC is 36 inches from finished grade.

h. In landscaped or planter areas, fire hydrants, FDC and PIV'S shall be located between 3 and 6 <u>feet behind the back of curb or be protected by bollards.</u>

i. FDC's shall have a minimum three-foot (circumference) unobstructed clearance around the devices, in accordance with F.D. Details.

j. FDC's shall be red in color with 2-inch high white letters and numbers. FDC's serving multiple buildings shall be signed with the premise address on a sign. The sign shall be 10 inches by 8 inches, red in color with white 2-inch letters or numbers. See F.D. Details. The signs shall include address (1234-46) of the premise(s) served by the FDC and shall be 0.08 gage aluminum. The sign shall be securely attached to the FDC check valve with "U" type bolts or other means as to secure and not bend the sign.

k. FDC's for Multi-Family (R-1) shall be 1-1/2 inch female swivel connections located on the building under the audio/visual (horn/strobe) device for the building. PIV's shall be signed in accordance with F.D. Details on the PIV as either riser or sectional control. All riser control PIV's shall include the address of the premise(s) served. PIV's shall be red in color with 2-inch high white letters and numbers.

l. Show all fire hydrants on the plans (existing and proposed).

m. All Fire hydrants installed on private and public water lines shall be provided with "OUT OF SERVICE" signs. Upon completion of required inspections, tests acceptance and approval of the

water system and the system is verified to be in service, the “OUT OF SERVICE” signs shall be removed. Signs shall be in accordance with F.D. Details.

n. Private Fire Hydrants shall have a minimum three (3) foot (circumference) unobstructed clearance around the devices, in accordance with F.D. Details.

o. Fire Hydrant height clearance shall be a minimum of 18 inches from the center of the four (4) inch cap to ground level (finished grade) in accordance with F.D. Details.

p. Fire Hydrant reflective markers on private fire systems shall be in accordance with F.D. Details.

q. All buildings except Group R, Division occupancies shall be provided with an approved automatic fire sprinkler system installed in accordance with F.D. Standards.

r. All fire sprinkler systems for Multi-Family (R-1) shall be third party monitored and an on-site fire alarm enunciator panel shall be installed at the office/clubhouse.

s. All Residential (Group R, Division 3 occupancies) Fire Sprinkler System:

t. Any person, including but not limited to subdividers, applicants, sellers, and or realtors, offering homes for sale through the use of a model home sales office shall provide to each prospective homebuyer an educational brochure or handout explaining misconceptions and facts concerning residential automatic fire sprinkler systems and, further, shall cause to be provided, as an available purchase option, to the homebuyer, an approved residential automatic fire sprinkler system, to be installed in the home as the home is constructed, at a competitive cost, by an Arizona State licensed fire protection contractor. Such sellers shall, at the time of purchase and construction contract is executed, obtain signed documentation from any homebuyer who chooses to decline an optional fire sprinkler system.

u. Provide the proposed occupancy classification, square footage under roof, and construction type of the building and areas within the building.

v. A second independent Emergency Fire Apparatus Access Roadway (means of ingress/egress) shall be provided to the site.

w. Provide a turn around that meets the Fire Department requirement: minimum 26 feet on the inside turning radius and minimum 48.5 feet outside turning radius.

x. Provide access to all portions of the building within 150 feet from where the fire truck can stop (roadway). The route is to be measured around the building(s) as the fire hose would be laid out. The route is NOT to be measured through interior or covered walkways.

y. Show fire lanes, signage locations and the sign details on the plans, in accordance with F.D. Standards.

z. Any structure located across a Fire Access road shall have an unobstructed vertical clearance of not less than 13- feet 6- inches. The vertical clearance shall be increased if the Public Safety Director/Assistant Fire Chief determines the vertical clearance is not adequate to provide fire apparatus access.

aa. Show any gates or other barriers limiting 24-hour access to the site and describe in a note, in accordance with F.D. Standards.

bb. Electrically operated or locked gates installed across required fire apparatus access roadways shall be provided with pre-emption devices and key switch. The gate(s) with the pre-emption devices shall remain open for 30 minutes after the first unit enters, to allow other units or ambulances to enter during emergencies.

cc. Construction drawings for all public Group E, Division 3 occupancies shall be submitted to the State Fire Marshal's Office for review and approval prior to submitting to the City of Maricopa.

dd. Group E, Division 1 and Division 3 occupancies having an occupant load of 50 or more shall be provided with an approved manual fire alarm system. When automatic sprinkler systems or smoke detectors are installed they shall be connected to the building fire alarm system, and the building fire alarm system shall be automatic and manual.

ee. Underground fuel storage tank installation plans shall be submitted to the State Fire Marshal's Office for review and approval prior to submittal to the City of Maricopa.

ff. All fuel island canopies shall have automatic fire sprinkler installed.

gg. Electronic Hazardous Materials Inventory Statement (HMIS) is required to be completed for Plan Review and submitted with construction drawings to F.D. The electronic version shall import into the FD's software. The FD is using software from Encompsol (ECS). Any format can be used as long as it will import into the Fire Departments software. ECS may be contacted at web site www.encompsol.com to obtain information on the software or to determine what will import into the system.

hh. A copy of the Material Safety Data Sheets (MSDS) shall be in a PDF format and attached in the software. If you need assistance with this, please contact the Maricopa Fire Department at 520-568-3333.

ii. Key Box required when the fire sprinkler riser control is inside the building and/or when a fire alarm system is installed in the building.

jj. Buildings and Structures that are five (5) floors or 75 feet in height or more above grade or which can be characterized as "High Rise" buildings or underground buildings and structures, or components thereof, totaling ten thousand (10,000) square feet or more that are either more than two (2) floors or more than thirty (30) feet below grade shall be required to have an internal "Breathing Air replenishment System" installed for firefighter safety.

kk. Buildings and structures that are thirty-five (35) feet high or higher or underground buildings or structures or components thereof totaling ten thousand (10,000) square feet or more that utilize metal framing and/or metal roofing that have a minimum radio signal strength of less than one (1) microvolt either transmitted out of or received within building shall be required to have an internal "Emergency Radio Communications System" installed.

APPENDIX G
FIRE FLOW REQUIREMENTS

FIRE FLOW REQUIREMENTS

One of the basic essentials needed to control and extinguish a structure fire is an adequate water supply. Designing the water supply for new buildings is an important part of the initial planning for new development projects whether the new building is a 1500 square foot house or a 200,000 square foot retail store.

The City of Maricopa has adopted the 2012 edition of the International Fire Code which has minimum standard requirements for fire flow and fire hydrant locations listed in Appendix B and C. These standards are based on fire flow calculations originally developed by the Insurance Services Office (ISO). The Fire Code standard is a modified version of the ISO calculation method and utilizes a table of fire flows to simplify the calculation procedure. This guide is intended for applicants of new projects to explain how to calculate the required fire flows for new buildings and for additions to existing buildings.

Included at the end of this guide are the text and tables from Appendix B and C of the International Fire Code, 2012 Edition. Also included is a copy of the New Development Fire Flow Form. This form must be completed for new developments before a Planning Clearance is approved by the Fire Department. To complete the form:

1. The applicant must fill out Section A.
2. The applicant must then have the appropriate water provider (Global Water or Maricopa Domestic Water) complete Section B.

Once the completed form is reviewed and approved by the Fire Department, a Planning Clearance will be issued.

1. DEFINITIONS
   a. FIRE FLOW CALCULATION AREA (2012 IFC, B104.1)

      The fire flow calculation area shall be the total floor area of all floor levels within the exterior walls, and under the horizontal projections of the roof of a building, except as modified in Section B104.3

   b. SEPARATE FIRE FLOW CALCULATION AREAS (2012 IFC, B104.2)

      Portions of building which are separated by fire walls WITHOUT OPENINGS constructed in accordance with the International Building Code (IBC 702.1) are allowed to be considered as separate fire-flow calculation areas.

   c. FIRE WALL (2012 IBC, 702.1)

      A fire-resistance rated wall having protected openings (NO OPENINGS OF ANY KIND, whether protected or otherwise, are allowed for separating fire flow calculation areas) which restricts the spread of fire and extends continuously from the foundation to or through the roof, with sufficient structural stability under fire conditions to allow collapse of construction on either side without collapse of the wall.

2. DETERMINING REQUIRED FIRE FLOW FOR BUILDINGS
   a. Determine the use of the buildings. All buildings will be either:
      i. One- and two-family dwellings
      ii. Buildings other than one- and two-family dwellings

b. For buildings that are one- and two-family dwellings:

   i. Dwellings with a fire area up to 3,600 square feet, the required fire flow is 1,000 gallons per minute.

   ii. Dwellings with a fire area larger than 3,600 square feet use Table B105.1 to determine the required flow. (Refer to the column heading Type V-B).

      - Find the fire area in the appropriate column per the type of building and the fire flow value is in the corresponding column.
      - For example: a 4,500 square foot home would have a required fire flow of 1,750 gallons per minute.

c. For buildings other than one -or two -family dwellings:

   Determine the fire area and type of construction for each building.

   Use Table B105.1 to determine the fire flow. Some examples:

   i. A 25,000 square foot Type V-A building has a fire flow requirement of 2,750 gallons per minute.

   ii. A 10,000 square foot Type IIIB building has a fire flow requirement of 2,250 gallons per minute.

   iii. A 100,000 square foot Type IIB building has a fire flow of 6,750 gallons per minute.

3. REDUCING REQUIRED FIRE FLOW

   Installing an approved fire sprinkler system:

   i. For one- and two-family dwellings, the required fire flow is reduced by 50% in sprinkled buildings.

   ii. For buildings other than one- and two-family dwellings, the fire flow can be reduced up to 75%, but the resulting fire flow cannot be reduced below 1,500 gallons per minute.

   For example: a 50,000 square foot Type IIIB building has a fire flow of 4,750 gallons per minute. If equipped with a fire sprinkler system, the fire flow can be reduced by up to 75% -- to 1,188 gallons per minute. However, the minimum fire flow in this case is 1,500 GPM because this is the minimum allowed by the code.

4. FIRE FLOW CALCULATION AREAS

   a. In order to calculate the individual fire flow calculation areas, divide the building into separate fire flow calculation areas as constructed in accordance with the International Building Code.

   b. The fire flow for each fire flow calculation area within the building is then calculated according to Table B105.1.

      For example, if a 50,000 square foot Type IIIB building is separated into two 25,000 square foot fire flow calculation areas by a fire wall, the fire flow for each area is 3,250 gallons per minute. Without the fire wall, the 50,000 square foot fire flow calculation area has a fire flow of 4,750 gallons per minute.

   c. For most development projects, the building with the largest fire flow determines the fire flow requirements for the entire project. For larger projects with buildings of different sizes and types

of construction, the design of the water distribution system for the project may depend on the type and size of buildings in a given area.

d. As a general rule, water mains supplying fire hydrants should be at least 8 inches in size.

e. Larger water mains may be required depending on the fire flow available at the point of connection to the existing water- distribution system.

5. FIRE HYDRANT LOCATIONS AND DISTRIBUTIONS

Project applicants should refer to Part 7, Section 9: Appendix C of the International Fire Code to determine the number and placement of fire hydrants for a given project. However, in the City of Maricopa a few general rules apply:

a. Single Family Residential Subdivisions:

   Fire hydrants should be located at all major intersections. All residential lots must have a fire hydrant within 250 feet of the lot frontage as measured along the street. For smaller size lots located on a cul-de-sac, the distance to the nearest fire hydrant can be increased to 450 feet (2012 IFC, Section 508.5.1, Exceptions 1 and 2).

b. Commercial Developments, refer to Part 7, Section 9: Appendix C of the International Fire Code and follow these steps (in order):

   i. Determine the fire-flow requirement

   ii. Determine the required number of fire hydrants

   iii. Determine the maximum spacing between hydrants

   iv. Provide an approved access road so a fire truck can be located within 150 feet walking distance of all exterior portions of the building

   v. Based on the required fire flow, a fire hydrant must be within the required distance from the fire truck as shown in the right hand column from the Table C105.1. For example: if the required fire flow is 3,000 GPM, three fire hydrants are required; their average spacing cannot exceed 400 feet, and at any point along the required access road a fire hydrant must be within 225 feet.

   NOTE: For buildings equipped with an approved fire sprinkler system, hydrant spacing can be increased as long as the distance from the nearest fire hydrant to the fire truck does not exceed 450 feet (IFC Sec 508.5.1, Exceptions 1 and 2).

6. LOOPED WATER LINES

a. Looped water lines are fed from two directions in such a way that a line break at any point along the looped line does not result in shutting off the water supply.

b. Looped water lines are important in a fire situation because a water main break could result in loss of a building or group of buildings if a second source of supply is not available.

c. Fire hydrants shall be on a looped (receiving water from more than one direction) water supply line of at least six (6) inches in diameter.

   i. Exceptions to providing looped water lines:

      1. One or two-family residential developments may have hydrants supplied by a dead-end water line where there are 30 or fewer dwelling units. Up to 60 dwelling units

may have hydrants supplied by a dead-end water line when all units are protected by an approved residential fire sprinkler system. In any case, the Public Safety Director/Assistant Fire Chief may require such developments provide for water line connections to adjacent properties to ensure the overall water distribution system meets recognized standards.

2. Multiple-family residential developments having up to 100 dwelling units may be protected by fire hydrants supplied by a dead-end water line. Up to 200 dwelling units may be protected by fire hydrants supplied by a dead-end water line when all units are protected by an approved residential fire sprinkler system. In no case shall such developments be supplied by a dead-end line exceeding 1000 feet in length. The Public Safety Director/Assistant Fire Chief may require such developments provide for water line connections to adjacent properties to ensure the overall water distribution system meets recognized standards.

3. For commercial and industrial developments, any building not exceeding three stories or 30 feet in height may be protected by fire hydrants supplied by a dead-end water line.

4. For commercial and industrial developments, buildings or facilities having a gross building area up to 62,000 square feet may be protected by fire hydrants supplied by a dead-end water line. The gross building area may be increased to 124,000 square feet without a looped water line when all buildings are equipped with an approved automatic fire sprinkler system. In no case shall such developments be supplied by a dead-end line exceeding 1000 feet in length. The Public Safety Director/Assistant Fire Chief may require such developments to provide for water line connections to adjacent properties to ensure the overall water distribution system meets recognized standards.

5. The Public Safety Director/Assistant Fire Chief may allow a new development that would otherwise be required to provide a looped water line for required fire hydrants, to have a dead-end line as long as the development provides a means to connect to a looped system as future development occurs. The time period and conditions under which this exception is allowed shall be as determined by the Public Safety Director/Assistant Fire Chief.

6. The Public Safety Director/Assistant Fire Chief may allow fire hydrants to be supplied by other than a looped water line when the permittee can demonstrate, to the satisfaction of the Public Safety Director/Assistant Fire Chief, that a looped system is not practicable. In such event, the Public Safety Director/Assistant Fire Chief shall make their findings in writing and shall copy such findings to the Public Works Superintendent and the Director of Community Services. In such cases, additional fire protection may be required as determined by the Public Safety Director/Assistant Fire Chief.

7. The Fire Department recognizes that, for many new development projects, it is not always practical to immediately provide looped water lines. For example, if the new project is surrounded by undeveloped land or by areas that are already developed with no means of connecting to existing lines, dead-end lines might be allowed according to two basic rules:

a. If the required fire flows can be provided with dead-end lines, the looping can be delayed until either a later phase of the project is completed or until adjacent properties are developed, so that water-line extensions result in completion of the loop.

b. If the required fire flows can be provided with dead-end lines and looping the water lines is demonstrated to be impracticable, then the Public Safety Director/Assistant Fire Chief may allow the project to develop.

8. In all cases, if looping the water lines is the only way to provide the required fire flows, then the project will not be approved without the looping.

7. CITY OF MARICOPA, FIRE DEPARTMENT: NEW DEVELOPMENT FIRE FLOW

Instructions: To process the application, the developer/applicant's engineer should first fill out all items in Section A, and then deliver/mail this form to the appropriate water purveyor. Once the water supplier has signed and provided the required information, deliver/mail the completed and fully signed form to the City of Maricopa Fire Department.

SECTION A
TO BE COMPLETED BY: THE DEVELOPER/APPLICANT'S CIVIL ENGINEER

Date: _____

Project Name: _____

Project Street Address: _____

Assessor's Tax Parcel Number: _____

Property Owner Name: _____

City or County Project File Number: _____

Name of Water Purveyor: _____

1. If the project includes one or more one- or two-family dwelling(s):
   a. The maximum fire area[1] for each one -or two- family dwelling will be ____ square feet.
   b. All dwelling units ☐ will, ☐ will not include an approved automatic sprinkler system.

   Comments: _____

2. If the project includes a building other than one -and two-family dwelling(s):

   a. List the fire area and type of construction for all buildings used to determine the minimum fire flow requirements:

   _____

   b. List each building in the development that will be provided with an approved fire sprinkler system:

   _____

3. List the minimum fire flow required for this project (based on Appendix B and C of the IFC):

_____

[1] Fire flow calculation area, 2012 IFC, B104.1, p. 393.

Fire Flow Rule: The City's Fire Code sets minimum fire flows for all structures and new development. In general, for single family dwellings, the minimum fire flow is at least 1000 g.p.m at 20 p.s.i. residual pressure must be continuously available at each structure.

Duplex, other residential structures and all non-residential uses must have more fire flow in order to sufficiently fight fires. Inadequate fire flows are normally due to water supply issues caused by pipes that are too small or too little water pressure, or a combination of both. Refer to Appendix B and C, IFC 2012, to determine the minimum fire flow required for this project, based on the Water Purveyor's information (i.e., location, looping and size of water lines; water pressure at the site, etc.) and the type, density, and location of all structures. Base your professional judgment on the City of Maricopa approved utility plans and Water Provider information shown on this Form.

Each time the utility plans and/or other significant information relating to potable water changes, resubmit this form as if it were the first time to be completed.

[End of Section A; Section B continues on the next page.]

CITY OF MARICOPA, FIRE DEPARTMENT: NEW DEVELOPMENT FIRE FLOW

SECTION B
TO BE COMPLETED BY: THE WATER PURVEYOR

1. Circle the name of the water supplier: Global Maricopa

2. List the approximate location, type, and size of supply lines for this project, and/or attach a map with the same information.

_____

_____

3. List the g.p.m. at 20 p.s.i. residual pressure at the point that the development/project will be connected to the existing water system:

_____

_____

4. Attach 1. Fire flow test data for the fire hydrants nearest to the development/project that must be used to determine available fire flow OR 2. Attach a map or diagram with the same information OR 3. Attach a map/diagram with flow modeling information.

5. If new lines are needed (or if existing lines must be looped) to supply the required fire flows, or if more information is needed to state the available minimum gpm @ 20 psi residual pressure, please list what the applicant/developer must do or obtain:

_____

_____

_____

Name and Title of Water Supplier Employee completing this Form:

_____

Date:

_____

NOTE: The engineer's signature below represents that the CITY OF MARICOPA'S Fire Flow requirements will be met by this development, if constructed, as approved.

Print Name and License No. of Professional Civil Engineer registered in the State of Arizona:

_____

Signature of Professional Engineer:

_____

Date:

8. CITY OF MARICOPA, FIRE DEPARTMENT: RURAL DEVELOPMENT

Instructions: To process the application, the developer/applicant's engineer should first fill out all items in Section A, and then deliver/mail this form to the appropriate water purveyor. Once the water supplier has signed and given the required information, deliver/mail the completed and fully signed form to the Fire Department, Division of Prevention, 44624 W Garvey Ave, Maricopa, AZ. 85239

SECTION A
TO BE COMPLETED BY: THE DEVELOPER/APPLICANT'S CIVIL ENGINEER

Date:

Project Name:

Project Street Address:

Assessor's Tax Parcel Number:

Property Owner Name:

City or County Project File Number:

Name of Water Purveyor:

1. If the project includes one -or more one or two-family dwelling(s):
   a. The maximum fire area[2] for each one -or two- family dwelling will be _____ square feet.
   b. All dwelling units ☐ will, ☐ will not include an approved automatic sprinkler system.

   Comments:

2. If the project includes a building other than one- and two-family dwelling(s):
   a. List the fire area and type of construction for all buildings used to determine the minimum fire flow requirements:

[2] Fire flow calculation area, 2012 IFC, B104.1, p. 393.

b. List each building that will be provided with an approved fire sprinkler system:

_____

_____

_____

_____

3. List the minimum fire flow required for this project (based on the International Fire Code Appendix B and C):

_____

_____

_____

Fire Flow Rule: The City's Fire Code sets minimum fire flows for all structures and new development. In general, for single family dwellings, the minimum fire flow is at least 1000 g.p.m at 20 p.s.i. residual pressure must be continuously available at each structure.

Duplex, other residential structures and all non-residential uses must have more fire flow in order to sufficiently fight fires. Inadequate fire flows are normally due to water supply issues caused by pipes that are too small or too little water pressure, or a combination of both. Refer to Appendix B and C, IFC 2012, to determine the minimum fire flow required for this project, based on the Water Purveyor's information (i.e., location, looping and size of water lines; water pressure at the site, etc.) and the type, density, and location of all structures. Base your professional judgment on the City of Maricopa approved utility plans and Water Provider information shown on this Form.

Each time the utility plans and/or other significant information relating to potable water changes, resubmit this form as if it were the first time to be completed.

[End of Section A; Section B continues on the next page.]

SECTION B
TO BE COMPLETED BY: THE WATER PURVEYOR

1. Circle the name of the water supplier: Global Maricopa Seven Ranches

2. List the approximate location, type, and size of supply lines for this project, and/or attach a map with the same information.

_____

_____

3. List the g.p.m. at 20 p.s.i. residual pressure at the point that the development/project will be connected to the existing water system:

_____

_____

4. Attach 1. Fire flow test data for the fire hydrants nearest to the development/project that must be used to determine available fire flow OR 2. Attach a map or diagram with the same information OR 3. Attach a map/diagram with flow modeling information.

5. If new lines are needed (or if existing lines must be looped) to supply the required fire flows, or if more information is needed to state the available minimum gpm @ 20 psi residual pressure, please list what the applicant/developer must do or obtain:

_____

_____

Name and Title of Water Supplier Employee completing this Form:

_____

Date:

_____

NOTE: The engineer's signature below represents that the CITY OF MARICOPA'S Fire Flow requirements will be met by this development, if constructed, as approved.

Print Name and License No. of Professional Civil Engineer registered in the State of Arizona:

_____

_____

Signature of Professional Engineer:

_____

_____

Date:

9. FIRE FLOW REQUIREMENT FOR BLDGS., APP. B, IBC 2012

The provisions contained in this appendix are not mandatory unless specifically referenced in the adopting ordinance

SECTION 101 B
GENERAL

B101.1 Scope-The procedure for determining fire-flow requirements for buildings or portions of buildings hereafter constructed shall be in accordance with this appendix (App. B, IBC 2012). This appendix does not apply to structures other than buildings.

SECTION B102
DEFINITIONS

B102.1 Definitions- For the purposes of this appendix, certain terms are defined as follows:

FIRE FLOW - The flow rate of a water supply, measured at 20 pounds per square inch (psi) (138 kPa) residential pressure, that is available for firefighting.

FIRE FLOW CALCULATION AREA -The floor area, in square feet (m^2), used to determine the required fire flow.

SECTION B103
MODIFICATIONS

B103.1 Decreases - The Public Safety Director/Assistant Fire Chief is authorized to reduce the fire-flow requirements for isolated buildings or a group of buildings in rural areas or small communities where the development of full fire-flow requirements is impractical.

B103.2 Increases - The Public Safety Director/Assistant Fire Chief is authorized to increase the fire-flow requirements where conditions indicate an unusual susceptibility to group fires or conflagrations. An increase shall not be more than twice that required for the building under consideration.

B103.3 Areas without water supply systems - For information regarding water supplies for fire-fighting purposes in rural and suburban areas in which adequate and reliable water supply systems do not exist, the fire code official is authorized to utilize NFPA 1142 or the International Wild Land-Urban Interface Code.

SECTION B104
FIRE-FLOW CALCULATION AREA

B104.1 General-The fire-flow calculation area shall be the total floor area of all floor levels within the exterior walls, and under the horizontal projections of the roof of a building, except as modified in Section B104.3.

B104.2 Area Separation-Portions of buildings which are separated by fire walls without openings, constructed in accordance with the International Building Code, are allowed to be considered as separate fire-flow calculation areas.

Exception: Fire-flow calculation area for open parking garages shall be determined by the area of the largest floor.

B104.3 Type IA and Type IB construction-The fire-flow calculation area of buildings constructed of Type IA and Type IB shall be the area of the three largest successive floors.

Exception: Fire-flow calculation area for open parking garages shall be determined by the area of the largest floor.

SECTION B105
FIRE-FLOW REQUIREMENTS FOR BUILDINGS

B105.1 One- and two-family dwellings -The minimum fire-flow requirements for one- and two-family dwellings having a fire-flow calculation area which does not exceed 3,600 square feet (344.5 m^2) shall be 1,000 gallons per minute (3785.4 L/min). Fire-flow and flow duration for dwellings having a fire-flow calculation area in excess of 3,600 square feet (344.5 m^2) shall not be less than that specified in Table B105.1.

Exception: A reduction in required fire flow of 50 percent, as approved, is allowed when the building is provided with an approved automatic sprinkler system.

B105.2 Buildings other than one- and two-family dwellings -The minimum fire-flow and flow duration for buildings other than one- and two-family dwellings hall be as specified in Table B105.1.

Exception: A reduction in required fire-flow of up to 75 percent, as approved, is allowed when the building is provided with an approved automatic sprinkler system installed in accordance with Section 903.3.1.1 or 903.3.1.2. The resulting fire-flow shall not be less than 1,500 gallons per minute (5678 L/min) for the prescribed duration as specified in Table B105.1.

SECTION B106
REFERENCED STANDARDS

ICC	IBC-06	International Building Code Table B105.1	B104.2
ICC	IWUIC-06	International Wildland-Urban Interface Code	B103.3
NFPA	1142-01	Standard on Water Supplies for Suburban and Rural Fire Fighting	B103.3

TABLE B105.1
MINIMUM REQUIRED FIRE-FLOW AND FLOW DURATION FOR BUILDINGS[a]

FIRE FLOW CALCULATION AREA (square feet)					FIRE-FLOW (gallons/minute)[c]	FLOW DURATON (hours)
Type IA and IB[b]	Type IIA and IIIA[b]	Type IV and V-A[b]	Type IIB and IIIB[b]	Type V-B[b]		
0-22,700	0-12,700	0-8,200	0-5,900	0-3,600	1,500	2
22,701-	12,701-17,000	8,201-10,900	5,901-7,900	3,601-4,800	1,750	
30,201-	17,001-21,800	10,901-	7,901-9,800	4,801-6,200	2,000	
38,701-	21,801-24,200	12,901-	9,801-12,600	6,201-7,700	2,250	
48,301-	24,201-33,200	17,401-	12,601-	7,701-9,400	2,500	
59,001-	33,201-39,700	21,301-	15,401-	9,401-	2,750	
70,901-	39,701-47,100	25,501-	18,401-	11,301-	3,000	3
83,701-	47,101-54,900	30,101-	21,801-	13,401-	3,250	
97,701-	54,901-63,400	35,201-	25,901-	15,601-	3,500	
112,701-	63,401-72,400	40,601-	29,301-	18,001-	3,750	
128,701-	72,401-82,100	46,401-	33,501-	20,601-	4,000	4
145,901-	82,101-92,400	52,501-	37,901-	23,301-	4,250	
164,201-	92,401-	59,101-	42,701-	26,301-	4,500	
183,401-	103,101-	66,001-	47,701-	29,301-	4,750	
203,701-	114,601-	73,301-	53,001-	32,601-	5,000	
225,201-	126,701-	81,101-	58,601-	36,001-	5,250	
247,701-	139,401-	89,201-	65,401-	39,601-	5,500	
271,201-	152,601-	97,701-	70,601-	43,401-	5,750	
295,901-	166,501-	106,501-	77,001-	47,401-	6,000	
		115,801-	83,701-	51,501-	6,250	
		125,501-	90,601-	55,701-	6,500	
		135,501-	97,901-	60,201-	6,750	
		145,801-	106,801-	64,801-	7,000	
		156,701-	113,201-	69,601-	7,250	
		167,901-	121,301-	74,601-	7,500	
		179,401-	129,601-	79,801-	7,750	
		191,401-	138,301-	85,101-	8,000	

For SI: 1 square foot = 0.0929 m^2; 1 gallon per minute = 3.785 L/m; 1 pound per square inch = 6.895 kPa.

[a] The minimum required fire flow shall be allowed to be reduced by 25 percent for Group R.
[b] Types of construction are based on the International Building Code
[c] Measured at 20 psi.

10. FIRE HYDRANT LOCATION & DISTRIBUTION, APP. C, IFC 2012

The provisions contained in this appendix are not mandatory unless specifically referenced in the adopting ordinance

SECTION C101
GENERAL

C101.1 Scope- Fire hydrants shall be provided in accordance with this appendix (App C. IFC 2012) for the protection of buildings, or portions of buildings, hereafter constructed.

SECTION C102
LOCATION

C102.1 Fire hydrant locations -Fire hydrants shall be provided along required fire apparatus access roads and adjacent public streets.

SECTION C103
NUMBER OF FIRE HYDRANTS

C103.1 Fire hydrants available - The minimum number of fire hydrants available to a building shall not be less than that listed in Table C105.1. The number of fire hydrants available to a complex or subdivision shall not be less than that determined by spacing requirements listed in Table C105.1 when applied to fire apparatus access roads and perimeter public streets from which fire operations could be conducted.

SECTION C104
CONSIDERATION OF EXISTING FIRE HYDRANTS

C104.1 Existing fire hydrants -Existing fire hydrants on public streets are allowed to be considered as available. Existing fire hydrants on adjacent properties shall not be considered available unless fire apparatus access roads extend between properties and easements are established to prevent obstruction of such roads.

SECTION C105
DISTRIBUTION OF FIRE HYDRANTS

C105.1 Hydrant spacing - The average spacing between fire hydrants shall not exceed that listed in Table C05.1

Exception: The fire chief is authorized to accept a deficiency of up to 10 percent where existing fire hydrants provide all or a portion of the required fire hydrant service.

Regardless of the average spacing, fire hydrants shall be located such that all points on streets and access roads adjacent to a building are within the distances listed in Table C105.1.

APPENDIX H
FIRE DEPARTMENT DETAILS

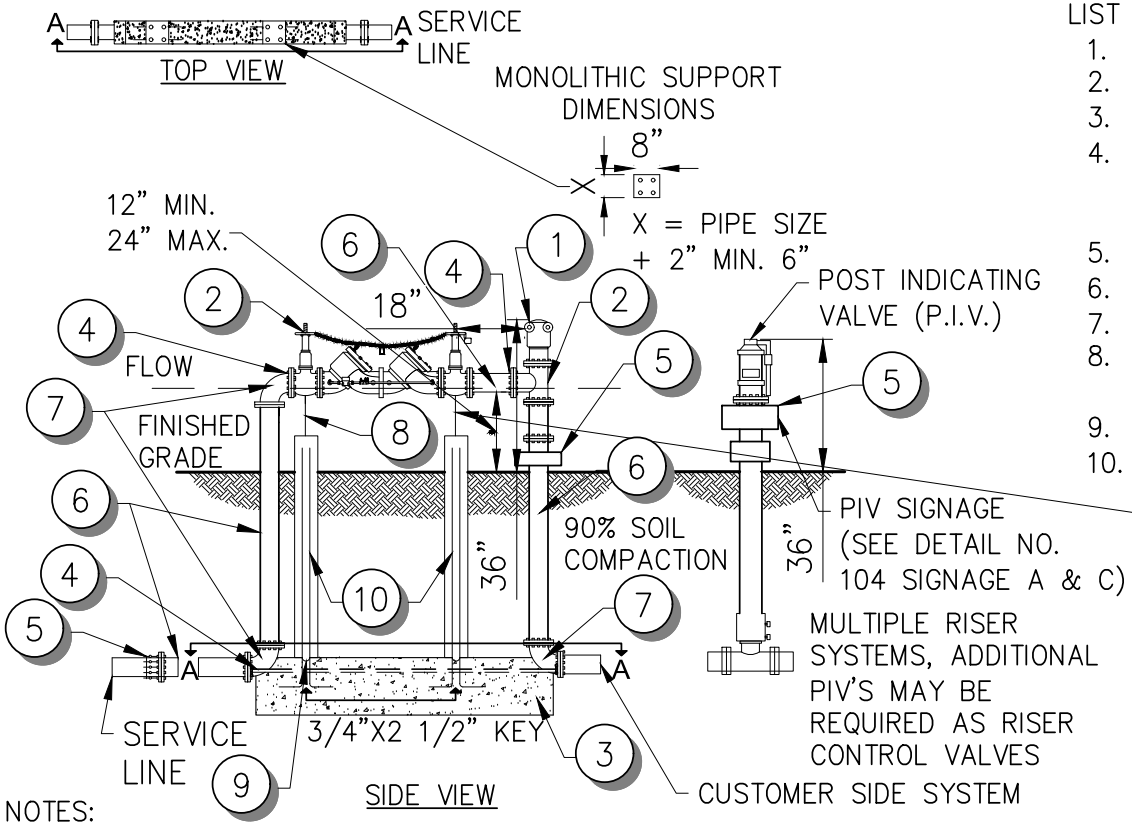

LIST OF MATERIALS

1. FIRE DEPARTMENT SIAMESE CONNECTION (FDC) (RED)
2. FLANGED TEE
3. THRUSTBLOCK INSTALLED PER N.F.P.A. #24, MIN. 16"
4. 3/4" ZINC COATED THREADED ROD, BOLTED TO FLANGES, BOTH SIDES TYPICAL EQUAL TENSION MINIMUM FOUR RODS, EVENLY SPACED
5. FLANGED ADAPTER (WHEN REQUIRED)
6. PIPE SPOOL (FLANGED D.I.P.)
7. 90° ELBOW (FLANGED D.I.P.)
8. ADJUSTABLE PIPE SUPPORT, PERMANENTLY ATTACHED TO BASE, 6" MAX. HEIGHT
9. CONSTRUCTION JOINT KEY TO BE 1 3/4" X 2 1/2"
10. #6 REINFORCING STEEL, DEFORMED BAR, 4" APART, EVENLY SPACED

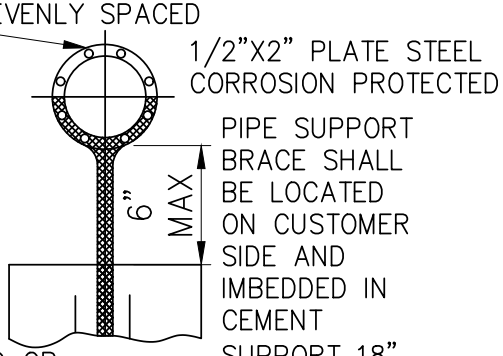

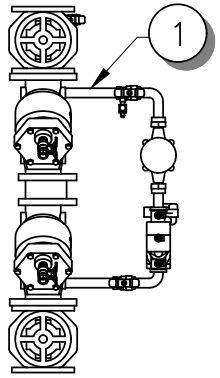

PLAN VIEW

NOTES:

1. DOUBLE CHECK DETECTOR ASSEMBLY WITH BYPASS METER SHALL BE UL LISTED OR FM APPROVED FOR FIRE PROTECTION USE AND SHALL BE AS APPROVED BY U.S.C. FOUNDATION FOR CROSS-CONNECTION CONTROL AND HYDRAULIC RESEARCH. THIS ASSEMBLY IS TO BE USED FOR POLLUTION HAZARDS ONLY AS RECOMMENDED IN THE AWWA-M14 MANUAL.
2. ALL PIPING, VALVES, FITTINGS AND APPURTENANCES DOWNSTREAM OF THE SERVICE LINE SIDE O.S.&Y. VALVE.
3. THE ENTIRE ASSEMBLY SHALL BE SECURED WITH CHAIN AND LOCK.
4. BACKFLOW DEVICES SHALL BE PAINTED TO MATCH THE LANDSCAPE (DESERT BROWN)
5. FDC'S AND PIV'S SHALL BE PAINTED RED AND SIGNED PER FIRE DEPT. DETAIL NO. 104, SIGNAGE A, B, OR C.

GENERAL NOTES:

1. FDC'S SHALL BE LOCATED WITHIN 150 FEET OF A PUBLIC (YELLOW) FIRE HYDRANT AT THE ENTRANCE OF THE SITE.
2. A REGISTERED STRUCTURAL ENGINEER SHALL SEAL THE DESIGN OF THE THRUST BLOCKS, SUPPORTS AND TIE ROD ASSEMBLIES.

SCREENING METHOD

1. SCREEN WALLS, PLANT MATERIAL, BERMING AND/OR BUILDING ORIENTATION SHALL BE SUBMITTED TO DEVELOPMENT SERVICES FOR REVIEW AND APPROVAL PRIOR TO START OF CONSTRUCTION.
2. METHOD OF SCREENING USED MAY REQUIRE FDC'S TO BE REMOTELY LOCATED. FDC LOCATION AND METHOD OF INSTALLATION SHALL BE INCLUDED ON SCREENING PLAN SUBMITTED TO DEVELOPMENT SERVICES FOR REVIEW AND APPROVAL.

DETAIL NO.			REVISED	DETAIL NO.
MFD 101	CITY OF MARICOPA PROUD HISTORY · PROSPEROUS FUTURE	DOUBLE CHECK DETECTOR ASSEMBLY WITH BYPASS METER	01-01-2020	MFD 101

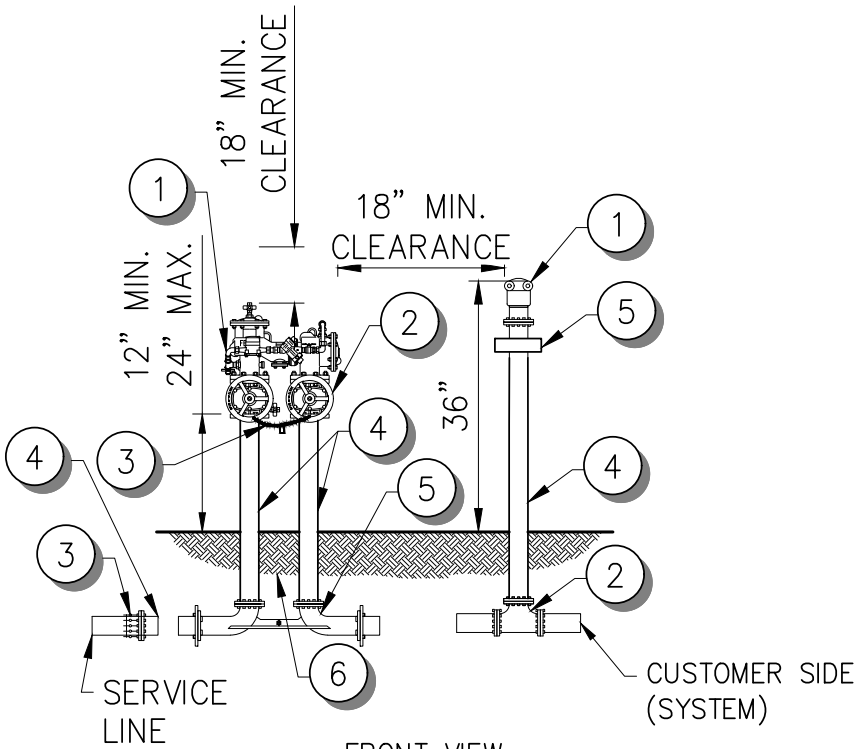

FRONT VIEW

LIST OF MATERIALS

1. FIRE DEPARTMENT SIAMESE CONNECTION (FDC) (RED)
2. FLANGED TEE
3. FLANGED ADAPTER (WHEN REQUIRED)
4. PIPE SPOOL (FLANGED D.I.P.)
5. 90° ELBOW (FLANGED D.I.P.)
6. 4" CLASS "B" CONCRETE PER MAG STD SPEC. 725

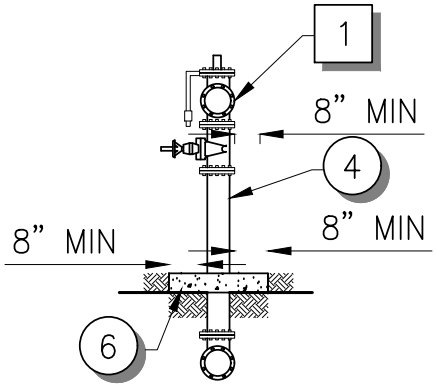

SIDE VIEW

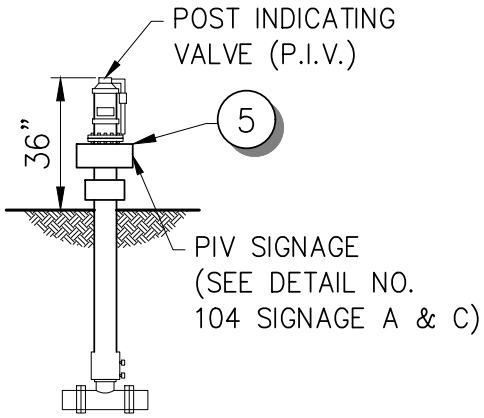

MULTIPLE RISER SYSTEMS, ADDITIONAL PIV'S MAY BE REQUIRED AS RISER CONTROL VALVES

NOTES:

1. DOUBLE CHECK DETECTOR ASSEMBLY WITH BYPASS METER SHALL BE UL LISTED OR FM APPROVED FOR FIRE PROTECTION USE AND SHALL BE AS APPROVED BY U.S.C. FOUNDATION FOR CROSS-CONNECTION CONTROL AND HYDRAULIC RESEARCH. THIS ASSEMBLY IS TO BE USED FOR POLLUTION HAZARDS ONLY AS RECOMMENDED IN THE AWWA-M14 MANUAL.
2. ALL PIPING, VALVES, FITTINGS AND APPURTENANCES DOWNSTREAM OF THE SERVICE LINE SIDE O.S.&Y. VALVE.
3. THE ENTIRE ASSEMBLY SHALL BE SECURED WITH CHAIN AND LOCK.
4. BACKFLOW DEVICES SHALL BE PAINTED TO MATCH THE LANDSCAPE (DESERT BROWN).
5. FDC'S AND PIV'S SHALL BE PAINTED RED AND SIGNED PER FIRE DEPT. DETAIL NO. 104, SIGNAGE A, B, OR C.

GENERAL NOTES:

1. FDC'S SHALL BE LOCATED WITHIN 150 FEET OF A PUBLIC (YELLOW) FIRE HYDRANT AT THE ENTRANCE OF THE SITE.
2. A REGISTERED STRUCTURAL ENGINEER SHALL SEAL THE DESIGN OF THE THRUST BLOCKS, SUPPORTS AND TIE ROD ASSEMBLIES.

SCREENING METHOD

1. SCREEN WALLS, PLANT MATERIAL, BERMING AND/OR BUILDING ORIENTATION SHALL BE SUBMITTED TO DEVELOPMENT SERVICES FOR REVIEW AND APPROVAL PRIOR TO START OF CONSTRUCTION.
2. METHOD OF SCREENING USED MAY REQUIRE FDC'S TO BE REMOTELY LOCATED. FDC LOCATION AND METHOD OF INSTALLATION SHALL BE INCLUDED ON SCREENING PLAN SUBMITTED TO DEVELOPMENT SERVICES FOR REVIEW AND APPROVAL.

DETAIL NO.			REVISED	DETAIL NO.
MFD 102	CITY OF MARICOPA PROUD HISTORY · PROSPEROUS FUTURE	DOUBLE CHECK DETECTOR ASSEMBLY WITH BYPASS METER	01-01-2020	MFD 102

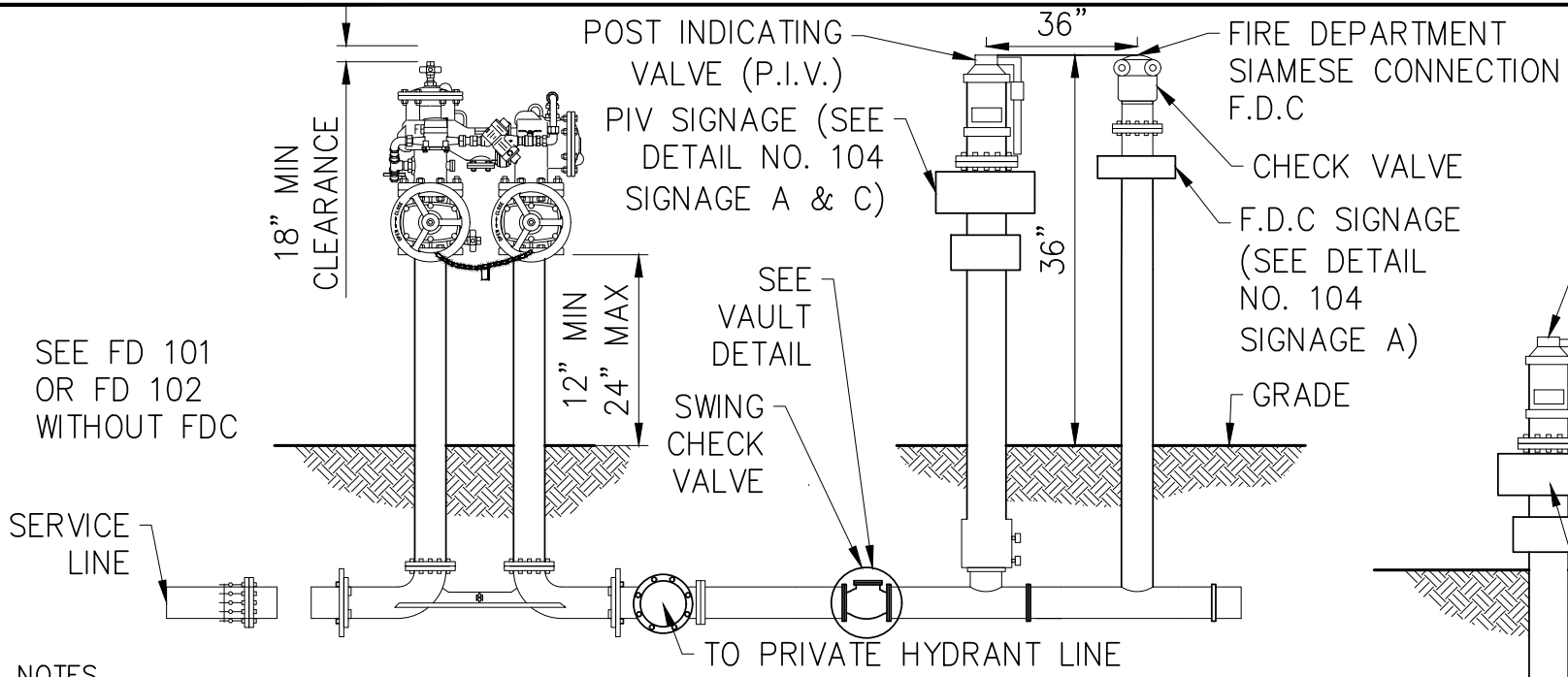

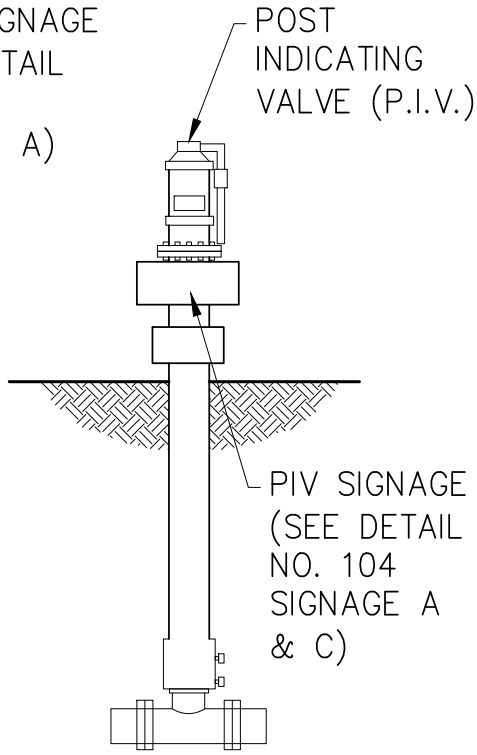

NOTES

1. FDC'S SHALL BE LOCATED WITHIN 150 FEET OF A PUBLIC (YELLOW) FIRE HYDRANT.
2. SWING CHECK VALVES USED ON UNDERGROUND FIRE LINES SHALL BE INSTALLED WITHIN A VAULT IN ACCORDANCE WITH THIS DETAIL. THE CHECK VALVE AND VAULT ASSEMBLY SHALL BE INSTALLED AFTER THE PRIVATE HYDRANT LINE (PRIVATE HYDRANTS SHALL BE PAINTED YELLOW WITH A BLACK BONNET).
3. FIRE SPRINKLER LINES SHALL HAVE A SECTION CONTROL PIV INSTALLED BETWEEN THE SWING CHECK VALVE AND THE FDC. A SECTIONAL CONTROL PIV SHALL BE INSTALLED AT MID POINT ON THE LOOPED FIRE LINE TO PROVIDE FOR ISOLATION OF THE FIRE LANE.
4. FIRE SPRINKER LINES SHALL HAVE A RISER CONTROL PIV FOR EACH INDIVIDUAL RISER. THE PIVS SHALL BE LOCATED AS CLOSE TO THE RISER AS PRACTICAL. THE RISE CONTROL PIV'S MAY BE ELIMINATED PROVIDED A KEY BOX IS INSTALLED TO PROVIDE FIRE DEPARTMENT ACCESS TO THE RISER CONTROL VALVES LOCATED INSIDE THE BUILDING.
5. FDC'S AND PIV'S SHALL BE PAINTED RED AND SIGNED PER FIRE DEPT. DETAIL NO. 104, SIGNAGE A, B OR C.
6. BACKFLOW DEVICES SHALL BE PAINTED TO MATCH THE LANDSCAPRE (DESERT BROWN). ALL STUB CUT AND FUTURE DEVELOPMENT PADS (PHASED PROJECTS) SHALL END WITH A PIV PAINTED FOREST GREEN.

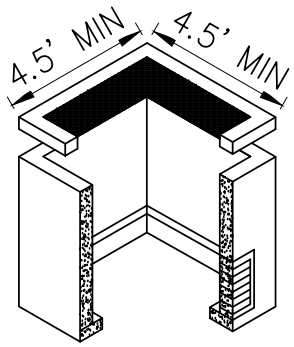

VAULT DETAIL

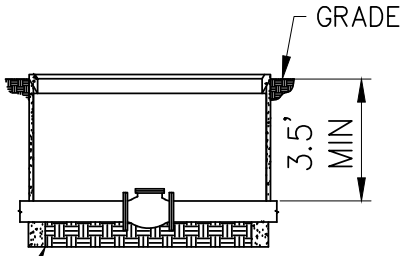

DETAIL NO.			REVISED	DETAIL NO.
MFD 103	CITY OF MARICOPA PROUD HISTORY · PROSPEROUS FUTURE	ON-SITE HYDRANT-UNDERGROUND FIRELINE AND SPECIAL USES	01-01-2020	MFD 103

SIGNAGE A

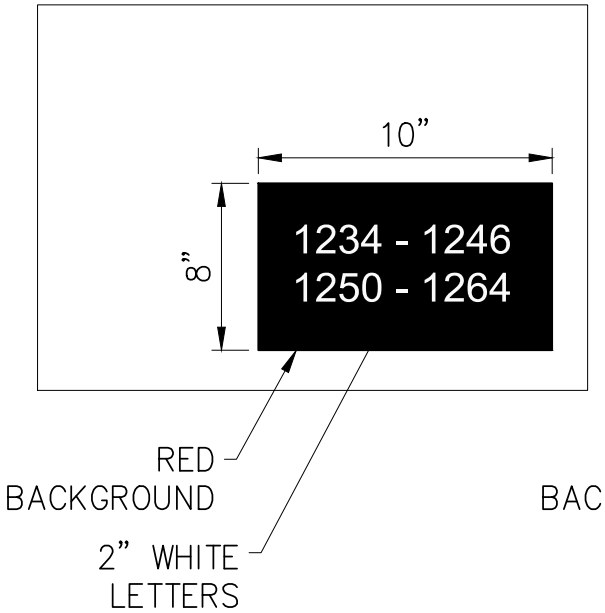

SIGNAGE B

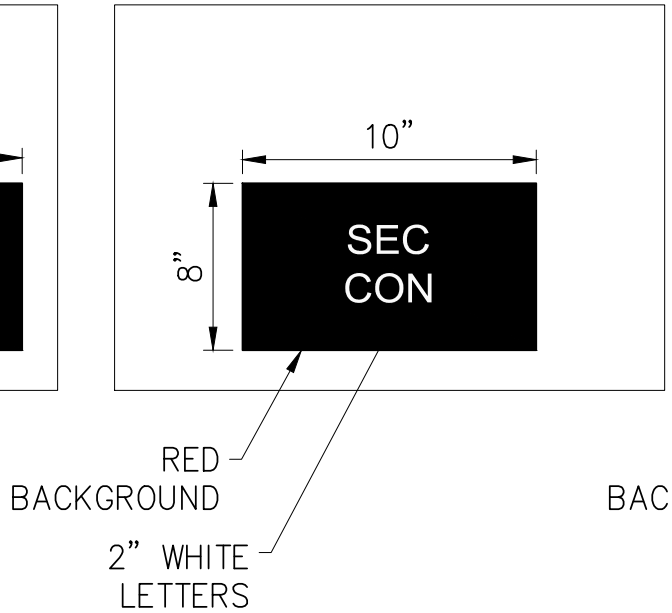

SIGNAGE C

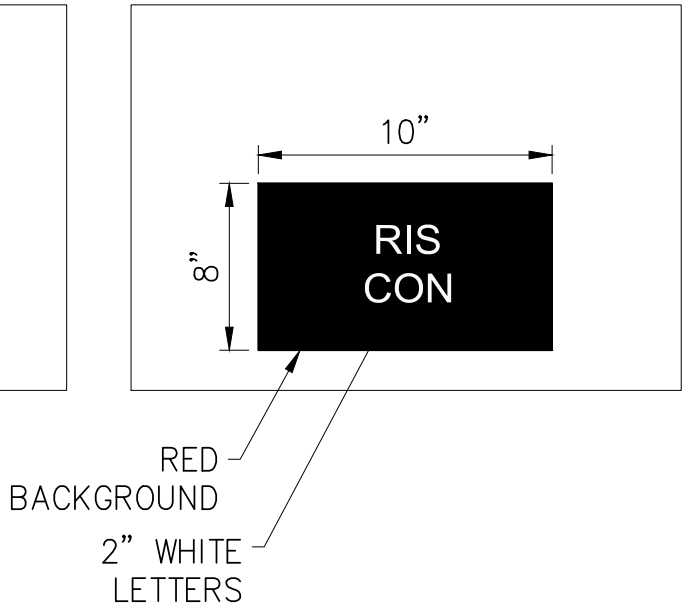

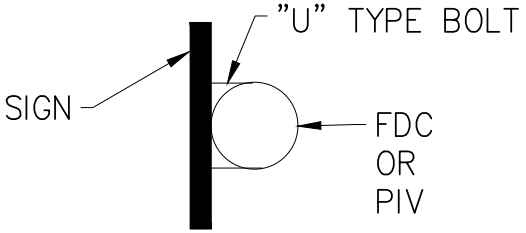

NOTES:

1. THE SIGNS SHALL INCLUDE THE ADDRESS(S) OF THE PREMISE(S) SERVING THE FDC OR PIV.

2. THE SIGNS SHALL BE RED IN COLOR WITH WHITE LETTERING AND SHALL BE 0.08 GAUGE ALUMINUM AND SHALL BE SECURELY ATTACHED TO THE FDC OR PIV WITH “U” TYPE BOLTS.

DETAIL NO.			REVISED	DETAIL NO.
MFD 104	CITY OF MARICOPA Proud History · Prosperous Future	FIRE DEPT. CONNECTION AND POST INDICATING VALVE SIGNAGE	01-01-2020	MFD 104

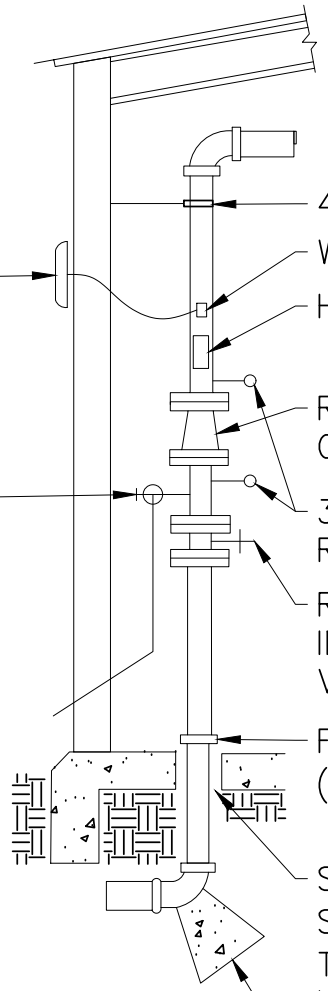

4–WAY BRACING SECURED TO STRUCTURE

WATER FLOW SWITCH WIRED TO EXTERIOR LOCAL ALARM

EXTERIOR LOCAL ARM, 10" ELECTRIC BELL OR APPROVED AUDIBLE DEVICE

HYDRAULIC DESIGN CALCULATIONS PLACARD

RISER ALARM CHECK VALVE OR APPROVED VERTICAL CHECK VALVE SHALL BE PROVIDED ON ALL RISERS

2" SYSTEM MAIN DRAIN PIPED TO EXTERIOR

300 LB PRESSURE GAUGE ABOVE AND BELOW RISER CHECK VALVE

RISER CONTROL VALVE. WHEN A RISER CONTROL PIV IS INSTALLED ON THE UNDERGROUND FIRE LINE, THE CONTROL VALVE ON THE RISER MAY BE OMITTED.

FLANGE 6" MINIMUM ABOVE FINISHED FLOOR. UNI–FLANGES (MEGA–LUGS) SHALL NOT BE USED ABOVE GRADE.

SLEEVE THROUGH FINISHED FLOOR. CLEARANCE ON ALL SIDES SHALL NOT BE LESS THAN ONE INCH FOR PIPE SIZES 1" THROUGH 3–1/2", AND TWO INCHES FOR PIPE SIZES 4" AND LARGER

THRUST BLOCK PER NFPA #24

NOTE

1. WHEN RISER CONTROLS ARE LOCATED INSIDE THE BUILDING A KEY BOX (WITH A MASTER KEY FOR THE BUILDING) SHALL BE PLACED AT THE FRONT ENTRANCE.

DETAIL NO.			REVISED	DETAIL NO.
MFD 105	CITY OF MARICOPA PROUD HISTORY · PROMINENT FUTURE	FIRE SPRINKLER SYSTEM RISER COMMERCIAL INSTALLATION	01–01–2020	MFD 105

MINIMUM ACCESSWAY WIDTH FOR FIRE LANE SIGN PLACEMENT		
* WIDTH	PARKING CONDITIONS	SIGNS REQUIRED
LESS THAN 25'	NO PARKING ON EITHER SIDE OF THE STREET	THIS DETAIL
25' TO LESS THAN 32'	PARKING ON ONE SIDE OF STREET ONLY	ONE SIDE
32' OR MORE	PARKING ON BOTH SIDES OF STREET	NOT REQUESTED

* ROLLED CURBS SHALL BE MEASURED FROM BACK OF CURB TO BACK OF CURB.

* ALL OTHER CURBS SHALL BE MEASURED FROM FACE OF CURB TO FACE OF CURB.

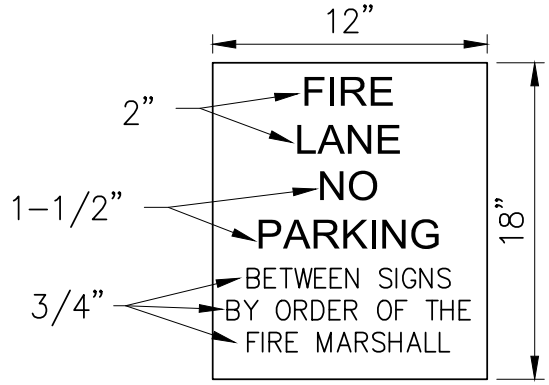

NOTES:

1. 2" LETTERS ARE 5/8" WIDE
2. 1-1/2" LETTERS ARE 1/2" WIDE
3. 3/4" LETTERS ARE 1/8" WIDE
4. ALL LETTERS ARE RED WITH A WHITE BACKGROUND
5. THE SIGNS ARE TO BE MOUNTED ON A POST AS PER DETAIL SHOWN
6. THE BOTTOM OF THE SIGN IS TO BE 7' ABOVE GRADE AND NO MORE THAN 75" APART
7. CURBING SHALL BE PAINTED BRILLIANT RED, UNLESS A WRITTEN VARIANCE IS PROVIDED TO THE FIRE MARSHALL FOR APPROVAL
8. THESE SIGNS ARE NOT SUPPLIED BY THE CITY OF MARICOPA

TYPE 'A': USE DRIVING HEAD FOR ALL FLANGED STEEL 'U' CHANNEL POSTS. IN LIEU OF DRIVING, FLANGED STEEL 'U' CHANNEL POSTS MAY BE SET IN CONCRETE BASE FOUNDATION AS PER TYPE 'B' BASE.

TYPE 'B' & 'C': CONCRETE BASE FOUNDATIONS SHALL BE CLASS 'C' CONCRETE.

FIRE LINE SIGN BASE

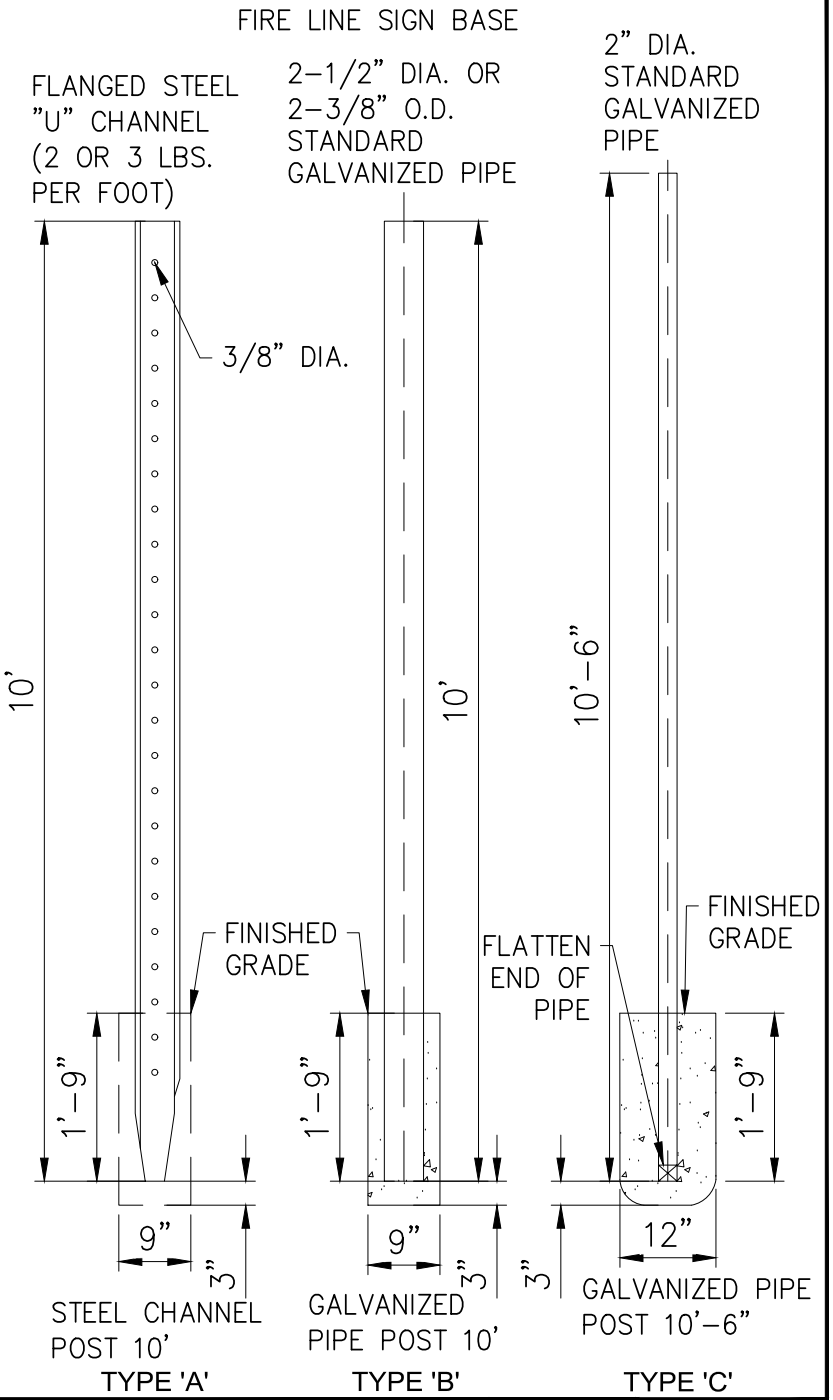

DETAIL NO.			REVISED	DETAIL NO.
MFD 111	CITY OF MARICOPA PROUD HISTORY · PROSPEROUS FUTURE	FIRE LANE SIGNAGE	01-01-2020	MFD 111

MINIMUM STREET WIDTH FOR FIRE LANE PLACEMENT

* WIDTH	PARKING CONDITIONS	SIGNS REQUIRED
LESS THAN 25'	NO PARKING ON EITHER SIDE OF STREET	THIS DETAIL
25' TO LESS THAN 32'	PARKING ON ONE SIDE OF STREET ONLY	USE DETAIL MFD 111
32' OR MORE	PARKING ON BOTH SIDES OF STREET	NOT REQUIRED

* ROLLED CURBS SHALL BE MEASURED FROM BACK OF CURB TO BACK OF CURB.

* ALL OTHER CURBS SHALL BE MEASURED FROM FACE OF CURB TO FACE OF CURB.

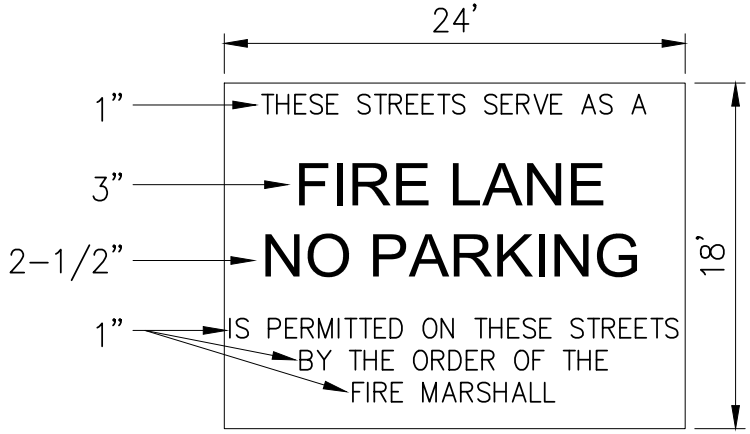

NOTES:

1. THIS SIGN MAY BE USED FOR PRIVATE STREET AND SUBDIVISIONS IN LIEU OF FIRE LANE SIGNS BEING POSTED EVERY 75' AND PAINTED CURBS.
2. 3 INCH LETTERS ARE 5/8 INCH WIDE.
3. 2-1/2 INCH LETTERS ARE 1/2 INCH WIDE.
4. 1 INCH LETTERS ARE 1/8 INCH WIDE.
5. ALL LETTERS ARE RED WITH A WHITE BACKGROUND.
6. SIGNS SHALL BE MOUNTED ON EITHER A SINGLE CENTER POST OR DOUBLE SIDE POSTS. POSTS MAY BE STEEL OR WOOD.
7. SIGNS SHALL HAVE A MAXIMUM DIMENSION OF 24 INCHES BY 18 INCHES HIGH.
8. THE BOTTOM OF THE SIGN IS TO BE 3 FEET ABOVE GRADE SIGNS AND POSTS ARE NOT SUPPLIED BY THE CITY OF CHANDLER.
9. ALL SIGNS SHALL BE VISIBLE UPON ENTERING THE PRIVATE STREET.
10. ALL SIGNS SHALL BE MAINTAINED, SO THEY ARE LEGIBLE.

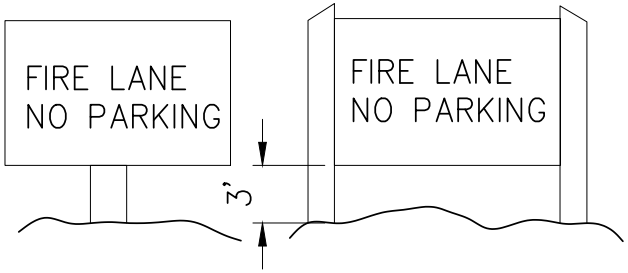

DETAIL NO.			REVISED	DETAIL NO.
MFD 112	CITY OF MARICOPA PROUD HISTORY · PROSPEROUS FUTURE	FIRE LANE SIGNAGE (PRIVATE STREETS AND SUBDIVISONS)	01-01-2020	MFD 112

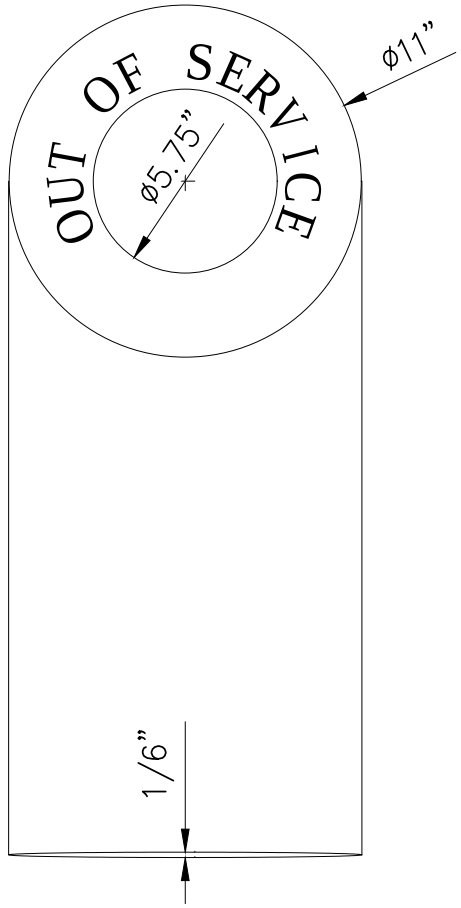

NOTES

ALL FIRE HYDRANTS INSTALLED ON PRIVATE AND PUBLIC WATER LINES SHALL BE PROVIDED WITH 'OUT OF SERVICE' SIGNS. UPON COMPLETION OF REQUIRED INSPECTIONS, TESTS, ACCEPTANCE, AND APPROVAL OF THE WATER SYSTEM BY A CITY INSPECTOR AND THE SYSTEM IS VERIFIED TO BE IN SERVICE, THE 'OUT OF SERVICE' SIGNS SHALL BE REMOVED. A HYDRANT REMOVED FROM SERVICE SHALL BE PROVIDED AN 'OUT OF SERVICE' SIGN WITHIN THE INITIAL 2 HOURS OF THE SERVICE INTERRUPTION. SIGNS SHALL BE IN ACCORDANCE WITH THIS DETAIL. SIGNS HALL BE PERMANENTLY MARKED AND CONSTRUCTED OF WEATHERPROOF METAL OR RIGID PLASTIC MATERIAL. THE COLOR OF LETTERING ON SIGNS SHALL BE IN HIGH CONTRAST WITH THEIR BACKGROUND. SIGNS SHALL HAVE THE WORDS 'OUT OF SERVICE' ON THE SIGN IN BLOCK CAPITAL LETTERS NOT LESS THAN 1–1/2" IN HEIGHT WITH A STROKE OF NOT LESS THAN 1/4".

DETAIL NO.			REVISED	DETAIL NO.
MFD 123	CITY OF MARICOPA PROUD HISTORY · PROSPEROUS FUTURE	'OUT OF SERVICE' SIGNS	01–01–2020	MFD 123

UNAUTHORIZED PERSONNEL SHUTTING OFF WATER VALVES AND FIRE HYDRANTS ARE IN VIOLATION OF CITY OF MARICOPA CODE

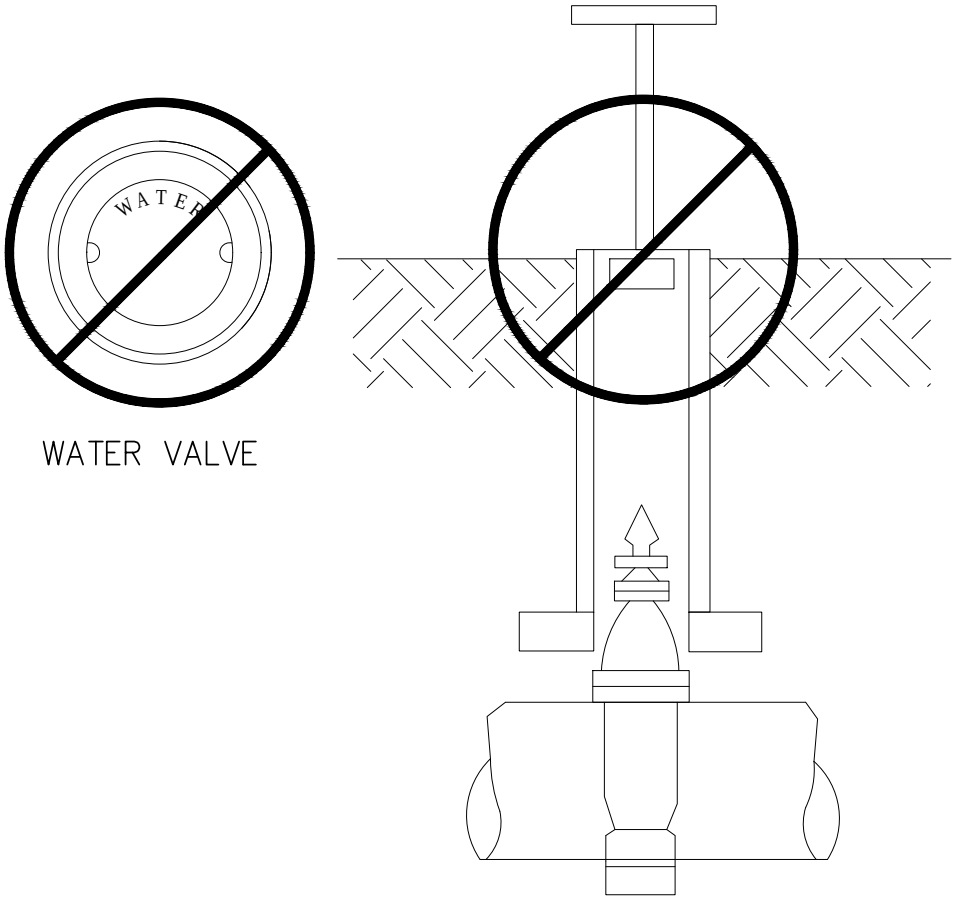

WATER VALVE

SIGNATURE: _____ DATE: _____

THIS IS TO BE POSTED IN THE CONSTRUCTION OFFICE

DETAIL NO.			REVISED	DETAIL NO.
MFD 124	CITY OF MARICOPA PROUD HISTORY · PROSPEROUS FUTURE	UNAUTHORIZED WATER VALVE SHUT OFF	01-01-2020	MFD 124

TWO LANE

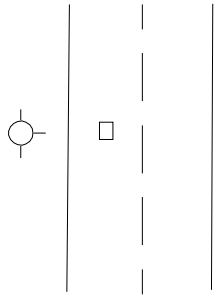

MULTI LANE

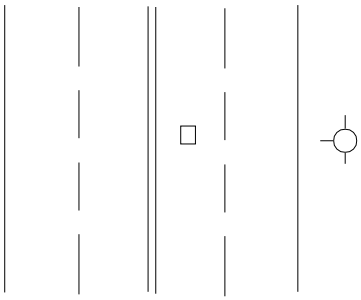

TWO LANE AT INTERSECTION

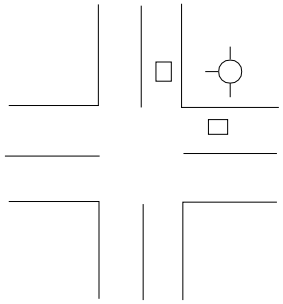

NOTES

1. MARKERS FOR FIRE HYDRANTS ON THE PRIVATE FIRE PROTECTION SYSTEMS SHALL BE SAMSONITE MODEL 911 AR (BLUE) OR APPROVED EQUAL.
2. MARKERS SHALL BE LOCATED IN THE CENTER OF THE TRAFFIC LANE.

DETAIL NO.			REVISED	DETAIL NO.
MFD 131	CITY OF MARICOPA PROUD HISTORY · PROSPEROUS FUTURE	HYDRANT REFLECTOR LOCATIONS ON PRIVATE FIRE SYSTEM	01-01-2020	MFD 131

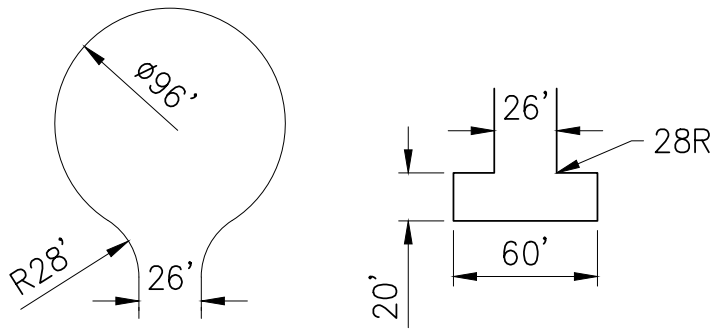

TURNAROUNDS: ALL DEAD–END FIRE APPARATUS ACCESS ROADS IN EXCESS OF 150 FEET IN LENGTH SHALL BE PROVIDED WITH APPROVED APPARATUS TURNAROUNDS.

SURFACE: FIRE APPARATUS ACCESS ROADS SHALL BE DESIGNED AS PER CITY OF MARICOPA ROADWAY STANDARDS.

HEIGHT: UNOBSTRUCTED VERTICAL CLEARANCE SHALL BE NOT LESS THAN 13 FEET 6 INCHES.

WIDTH: UNOBSTRUCTED WIDTH SHALL NOT BE LESS THAN 20 FEET.

PERMANENT

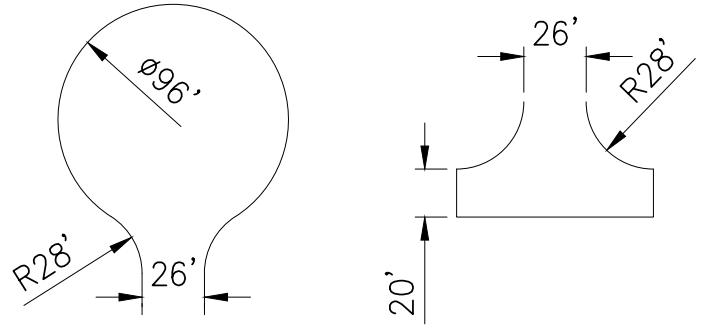

DETAIL A

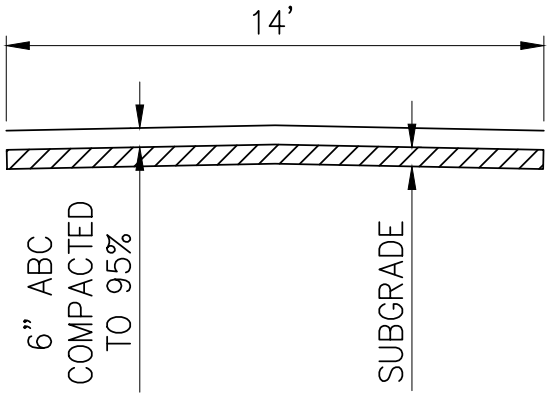

DETAIL B

NOTES:

1. TEMPORARY ACCESS ROADWAYS SHALL BE IN ACCORDANCE WITH THE FIRE CODE

2. ROADWAYS SHALL BE CONSTRUCTED AS PER DETAIL B ABOVE AND FIRE APPARATUS TURNAROUNDS SHALL BE IN ACCORDANCE WITH EITHER EXAMPLE IN DETAIL ABOVE WHEN THE ROADWAYS ARE IN EXCESS 150 FEET.

3. FIRE APPARATUS ACCESS ROADS SHALL BE DESIGNED AND MAINTAINED TO SUPPORT THE IMPOSED LOADS OF THE FIRE APPARATUS (50,000 LBS MIN.) AND SHALL BE PROVIDED WITH A SURFACE SO AS TO PROVIDE ALL WEATHER DRIVING CAPABILITIES.

TEMPORARY

DETAIL NO.			REVISED	DETAIL NO.
MFD 141	CITY OF MARICOPA Proud History · Prosperous Future	FIRE APPARATUS ROADWAYS AND TURNAROUNDS	01–01–2020	MFD 141

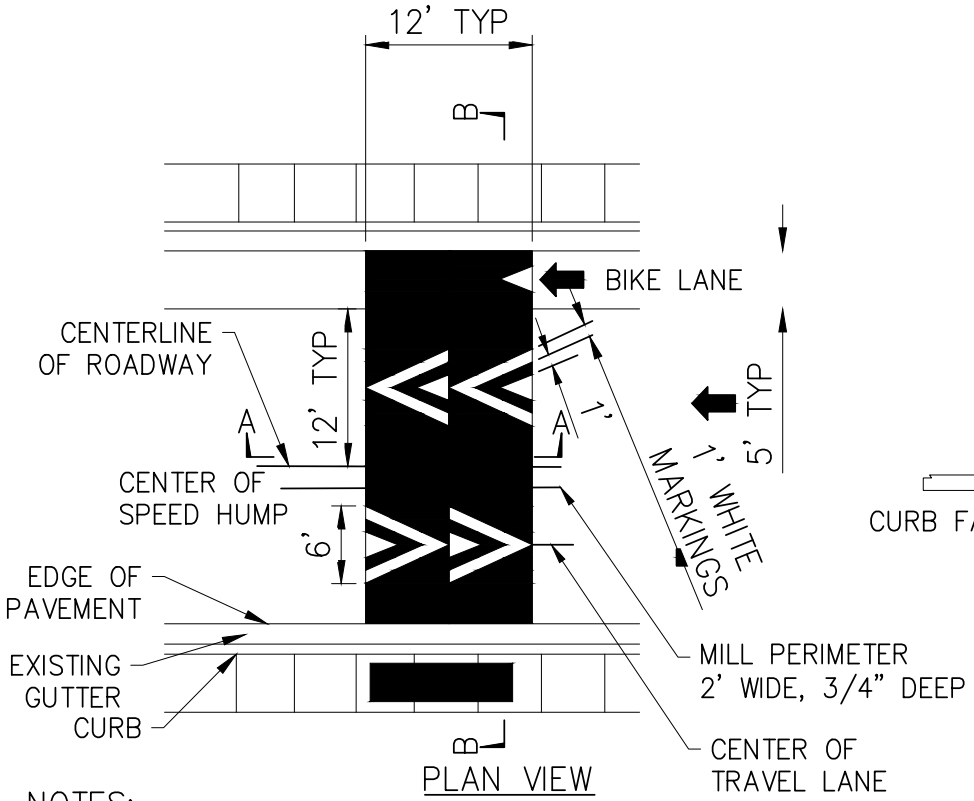

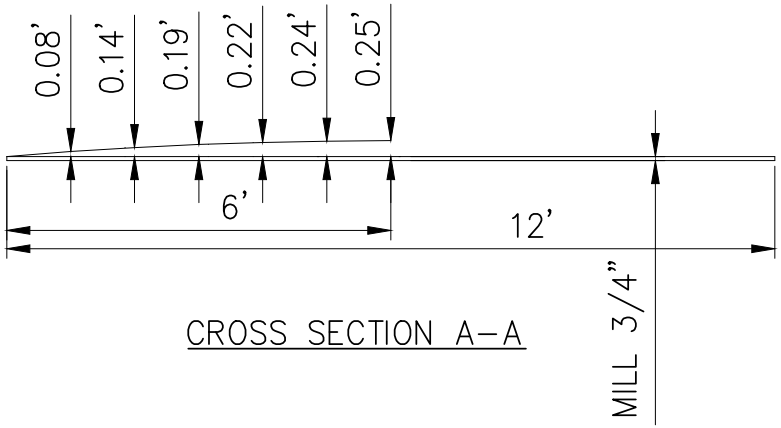

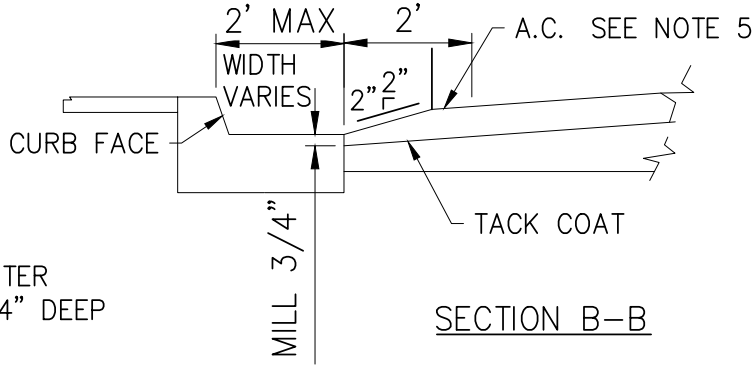

NOTES:

1. HUMPS MUST BE THE FULL 0.25' FOR MAXIMUM EFFECT BUT SHALL NOT EXCEED 0.27'.
2. CROSS–SECTION ELEVATIONS SHALL HAVE A MAXIMUM TOLERANCE OF +/– 0.02'.
3. SPEED HUMP SHALL NOT BE PLACED CLOSER THAN 30' FROM ACCESS DRIVE ENTRANCES/EXITS.
4. SPEED HUMPS SHALL NOT BE PLACED OVER MANHOLES, WATER VALVES, JUNCTION STRUCTURES, ETC.
5. THE EXISTING ROADWAY SHALL BE MILLED TO A DEPTH OF 3/4", AROUND THE PERIMETER AS SHOWN. CROSS SECTION DIMENSIONS DO NOT INCLUDE THE 3/4" MILLING.
6. HUMP SHALL BE CONSTRUCTED WITH EVAC SUPERMIX A–12.5. A TACK COAT SHALL BE APPLIED PRIOR TO APPLICATION OF PAVEMENT.

DETAIL NO.			REVISED	DETAIL NO.
MFD 142	CITY OF MARICOPA Proud History · Promising Future	SPEED HUMP FOR PRIVATE PROPERTIES AND PRIVATE ROADS	01–01–2020	MFD 142

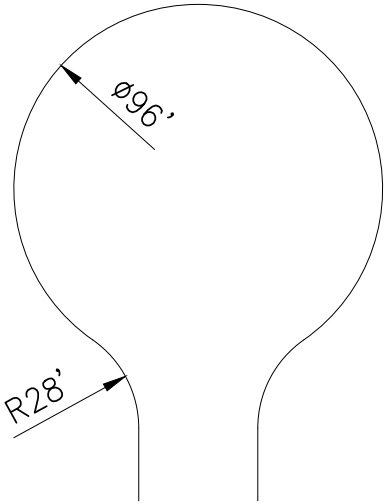

TURNAROUNDS: ALL DEAD-END FIRE APPARATUS ACCESS ROADS IN EXCESS OF 150 FEET IN LENGTH SHALL BE PROVIDED WITH APPROVED APPARATUS TURNAROUND.

SURFACE: FIRE APPARATUS ACCESS ROADS SHALL BE DESIGNED AS PER COC ROADWAY STANDARDS.

HEIGHT: UNOBSTRUCTED VERTICAL CLEARANCE SHALL NOT BE LESS THAN 13 FEET 6 INCHES.

WIDTH: UNOBSTRUCTED WIDTH SHALL NOT BE LESS THAN STANDARD APPROVED ROAD WIDTH.

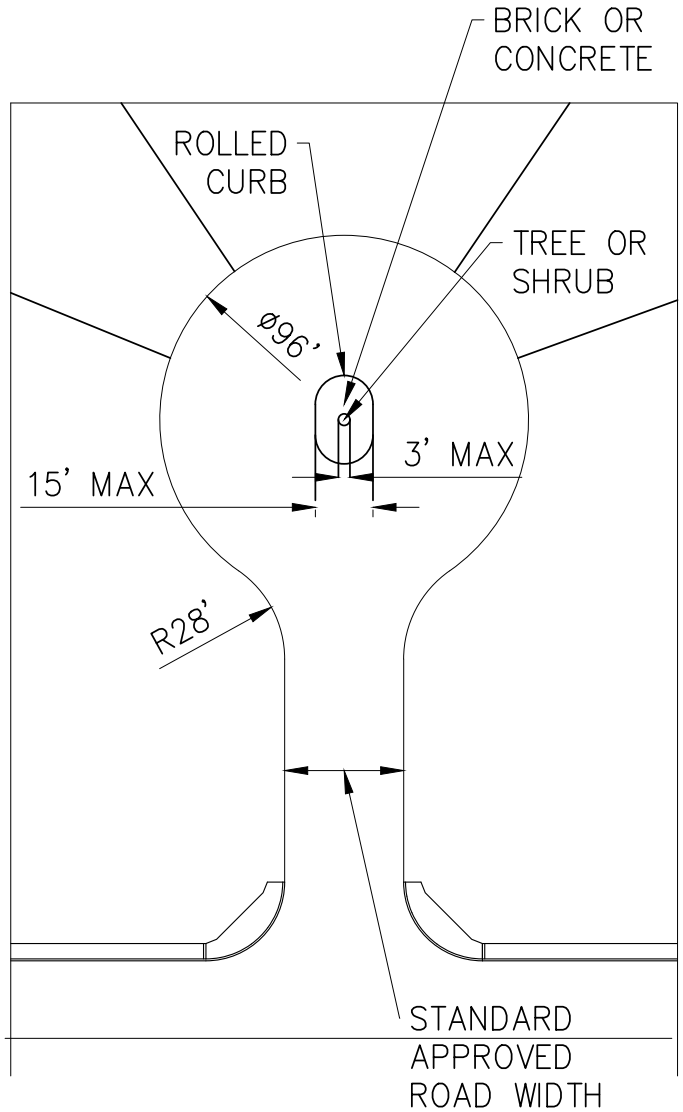

LANDSCAPE IN CUL-DE-SAC

DETAIL NO.			REVISED	DETAIL NO.
MFD 143	CITY OF MARICOPA Proud History · Prosperous Future	FIRE APPARATUS ROADWAYS AND TURNAROUNDS (LANDSCAPED ISLAND)	01-01-2020	MFD 143

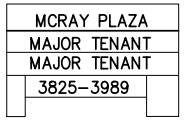

THE LOW–HIGH ADDRESS SHALL BE POSTED ON CENTER IDENTIFICATION SIGN AT MAIN ENTRANCE OF COMMERCIAL MALL, CENTER, VILLAGE, OR SQUARE, SO AS TO BE VISIBLE FROM THE NORTH–SOUTH OR EAST–WEST DIRECTION.

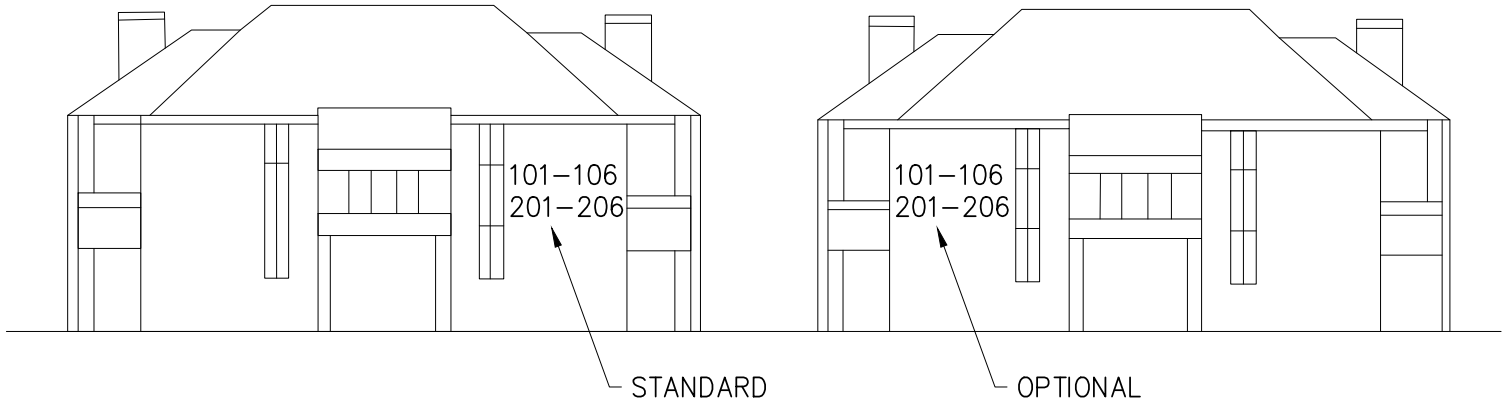

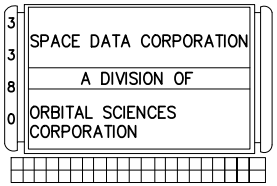

PERMANENT FIXTURE WITH THE SITES ADDRESS SHALL BE PLACED IN A CONSPICUOUS LOCATION IF NOT VIEWABLE FROM THE THOROUGHFARE FRONTAGE SO AS TO BE VISIBLE FROM A NORTH–SOUTH OR EAST–WEST DIRECTION.

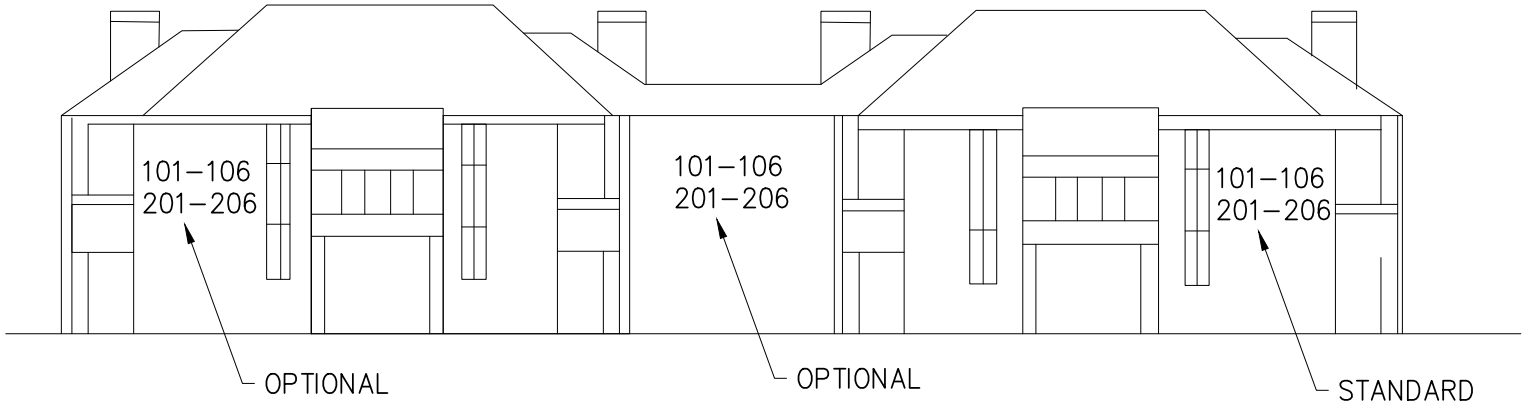

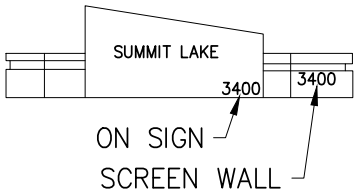

ADDRESS MAY BE DISPLAYED ON WALL AT THE MAIN ENTRANCE SO AS TO BE VISIBLE FROM THE ROADWAY.

BUILDING IDENTIFICATION NUMBERS AND INTERVAL OF SUB–STRUCTURE SUFFIXES ASSIGNED TO INDIVIDUAL UNITS SHALL BE DISPLAYED IN THE UPPER, RIGHT HAND CORNER AT THE END OF EACH BUILDING SO AS TO BE PLAINLY VISIBLE FROM THE ACCESS THOROUGHFARE. ALPHA CHARACTERS MAY BE ASSIGNED FOR BUILDING IDENTIFICATION FOR MULTI–FAMILY DEVELOPMENTS WHERE SINGLE DIGIT SUB–STRUCTURE SUFFIXES ARE USED. MULTI–FAMILY DEVELOPMENTS WITH INTERNAL DRIVES, BUILDING LETTER/NUMBER AND RANGE OF SUB–STRUCTURE SUFFIXES SHALL BE POSTED ON EACH SIDE OF BUILDING SO AS TO BE CLEARLY VISIBLE FROM ALL ACCESS DRIVES AND THOROUGH–FARES.
**EXCEPTION: INTERVAL OF SUB–STRUCTURE SUFFIXES MAY BE DISPLAYED ELSEWHERE ON BUILDING DUE TO REQUIRED LANDSCAPING, SUBJECT TO APPROVAL OF THE STREET NAMING AND ADDRESSING COORDINATOR, COLOR OF NUMBERS/LETTERS AND BACKGROUND SHALL CONTRAST AND CONFORM TO REQUIREMENTS FOR HELVETICA MEDIUM NUMBERING/LETTERING. DISTANCE AT WHICH NUMBERS/LETTERS SHALL BE LEGIBLE FROM CENTER OF THOROUGHFARE:
0 – 50'4" APPLIES TO SINGLE FAMILY RESIDENTIAL MULTI FAMILY, COMMERCIAL MALLS, CENTERS, OR VILLAGES.
50–200' 10' – INTERVAL OF LOW–HIGH SUB–STRUCTURES SUFFIXES FOR MULTI–FAMILY MAY BE A MINIMUM OF 6"– 8" IN HEIGHT. INTERVAL OF LOW–HIGH SITES ADDRESSES ON CENTER IDENTIFICATION SIGN MAY BE A MINIMUM OF 8" IN HEIGHT.
201–300'–12"
301–400'–14"
FOR COMMERCIAL MALLS, CENTERS, VILLAGES, AND SQUARES, DISTANCE TO BE MEASURED FROM CENTER OF ACCESS DRIVE TO STRUCTURE(S).

DETAIL NO.			REVISED	DETAIL NO.
MFD 151	CITY OF MARICOPA PROUD HISTORY · PROSPEROUS FUTURE	ADDRESS IDENTIFICATION	01–01–2020	MFD 151

APPENDIX I
GLOBAL WATER RESOURCES CODE OF PRACTICE

1. IRRIGATION LAND USE REQUIREMENTS

   a. PURPOSE

      The purpose of this Code of Practice is to define the optimum landscape configuration to allow for a minimum of supplemental water and a maximum usage of recycled water. It also defines the required Design Criteria for Recycled Water Retention Structures.

   b. MODEL

      i. A model has been developed which determines, on a monthly flow basis, what the requirements for irrigation, supplemental addition of raw water, and flows to the Arizona Pollutant Discharge Elimination System (AzPDES) point are for a typical section. The goal of the model is to provide the basis from which a determination on the optimum land-use configuration for the utility can be established.

      ii. The model minimizes the use of groundwater and maximizes the use of recycled water. This minimizes supplemental water in the summer months, and minimizes discharge of water to the AzPDES points in the winter.

      iii. The model operates under the following constraints:

         1. One section = 640 acres
         2. Occupancy = 3.5 DUs per acre
         3. Open Space = 15%
         4. Trees in Turf = 375 per section
         5. Recycled water production = 162 gallons per day per dwelling unit
         6. Storage must result in a minimum storage of 6 days of Recycled Water Production.
         7. The maximum Recycled Water Retention Structure size is 3 acres

   c. OUTPUT

      i. In order to minimize the use of groundwater , the following configuration is required:

         1. Turf = 22% (21.44 ac)
         2. Xeriscape = 75% (71.88 ac)
         3. Retention Structure = 3% (2.67 ac)
         4. Retention Structure Freeboard = 2 feet

   d. DESIGN CRITERIA

      i. Recycled Water Retention Structures shall be designed with the following criteria:

         Storage shall be provided such that the Recycled Water Retention Structure is capable of handling 6 days of recycled water production with no irrigation use. Recycled Water Production shall be calculated based on the following:

            a. RWP = 0.90 x 162 GPD per dwelling unit x Number of dwelling units x 6 days

b. Commercial Units shall be reduced to Equivalent Dwelling Units for the purpose of this calculation.

c. This requirement results in a minimum of 2 ft of vertical retention structure freeboard above design high water level

ii. A minimum configuration of the following is required:

a. Turf = 22% of Open Space
b. Xeriscape = 75% of Open Space
c. Retention Structure = 3% of Open Space

iii. The configuration is based on the 15% open space of a typical 640 acre development with model assumptions made which may not be accurate for a particular development. Changing the configuration is possible if the recycled water balance proves a more optimum configuration, but may result in additional costs to the developer, if it results in increased costs to the Utility.

iv. DISCHARGE OF STORMWATER TO THE RECYCLED WATER RETENTION STRUCTURE IS NOT ACCEPTABLE UNDER ANY CONDITION

v. A minimum air gap of 24 inches shall be provided between Retention Structure High Level and Raw/Recycled Water inlet.

vi. Retention Structure Level Control Vault design must conform to Global Water Standard Detail No. 321.

vii. An RTU developed to Global Water Standard Detail.

viii. Retention Structure level sensor in accordance with Global Water Standard Detail 321

ix. Electrical service (120 V, 1 ϕ)

x. Ethernet cable to retention structure control vault

xi. Flow meters with a 4-20 mA analog output signal in accordance with Global Water Standard Detail 321 are required

xii. Motorized valves in accordance with Global Standard Detail 321 are required to control flow to the irrigation retention structures.

xiii. A potable water feed stubbed to the vault for future connection

xiv. Easements deeded to the Utility which encompass the following:

1. Retention Structure Level Control Vault
2. Recycled, raw and potable water pipelines to vault
3. RTU
4. Electrical service

e. DESIGN SUBMITTALS

A recycled water master plan shall be submitted that as a minimum provides the following:

i. Acreage and percentage breakdown of total open space and turf, xeriscape and retention structure areas, and approximate number of trees associated with the landscaping plan;

ii. Anticipated irrigation usage by month based on landscaping plan;

iii. Anticipated recycled water production;

iv. Table indicating recycled water production, anticipated irrigation demand and resulting recycled water balance broken down by month;

v. Calculated Peak Hour and Peak Day irrigation demands; and

vi. Design drawings showing Recycled Water Retention Structure general arrangement, including plan, elevation and cross-section.

STANDARD DETAILS

for

UTILITY CONSTRUCTION

Pinal County:
Global Water - Santa Cruz Water Company, LLC
Global Water - Palo Verde Utilities Company, LLC
Global Water - Picacho Cove Water Company, LLC
Global Water - Picacho Cove Utilities Company, LLC

Maricopa County:
Water Utility of Greater Tonopah, LLC
Water Utility of Northern Scottsdale, LLC
Hassayampa Utility Company, LLC
Balterra Sewer, LLC

MARCH 2017

Q:\Design Standards\Global Water\Standard Details 2017\100-0 Cover Sheet.dwg

100 SERIES: GENERAL INFORMATION

100-1 Index
110 Plan Symbols
132 Recycled Water Signage

200 SERIES: STREET INFORMATION

200 Water, Sewer & Reclaimed Water Trench
201 Utility Trench Details

300 SERIES: WATER INFORMATION

310-1 1" Residential Single Water Service Installation
310-2 1" Commercial / Irrigation Water Service
310-3 1-1/2" to 2" Commercial / Irrigation Water Service
344-1 Temporary Hydrant Meter
344-2 Temporary Construction Meter
350-1 Double Check Backflow Preventer (¾"-2 ½")
350-2 Double Check Backflow Preventer (3"-10")
351-1 Reduced Pressure Backflow Preventer (¾"-2 ½")
351-2 Reduced Pressure Backflow Preventer (3"-10")
355-1 3-Stage Grease Interceptor
355-2 3-Stage Sand & Grease Interceptor
360-1 Fire Hydrant Assembly Main in Roadway
360-2 Fire Hydrant Assembly Main Behind Curb
370 Vertical Pipe Realignment
370-1 Water and Sanitary Sewer Separation/Protection
370-2 Water and Sanitary Sewer Separation/Protection
370-3 Water and Sanitary Sewer Separation/Protection
372 Minimum Utility Separation Requirements
387 Water Sampling Station
388-1 Potable Air Release Valve Non-Potable ARV
388-2 Non-Potable Air Release Valve
391 Butterfly Valve Operator Manhole

400 SERIES: SEWER INFORMATION

404 Utility Locations
420 Water-Tight Manhole
421 Pre-Cast Concrete Sewer Manhole
426 Drop Sewer Connection
440 Sewer Lateral Connection (Residential Only)
450 Marker Post for Sewer Stubs

03/2017

GWR Global Water Resources

Index

DETAIL NO.

100-1

Q:\Design Standards\Global Water\Standard Details 2017\100-1 - Index.dwg

FIRE HYDRANT		WATER LINE	W W W
WATER METER	M	WATER LINE w/SIZE	6"W 6"W 6"W
WATER PUMP		SEWER LINE	S S
WELL	W	SEWER LINE w/SIZE	8"S 8"S
VALVE		RECLAIMED WATER LINE	REC REC
AIR RELEASE VALVE		RECLAIMED WATER LINE w/SIZE	6"REC 6"REC
REDUCER		RAW WATER LINE	RAW RAW
CAP		RAW WATER LINE w/SIZE	12"RAW 12"RAW
SEWER CLEANOUT	C.O.	PUE LINE	
SEWER MANHOLE	S	ROW LINE	

03/2017

GWR Global Water Resources

Plan Symbols

DETAIL NO.

110

Q:\Design Standards\Global Water\Standard Details 2017\110 - Plan Symbols.dwg

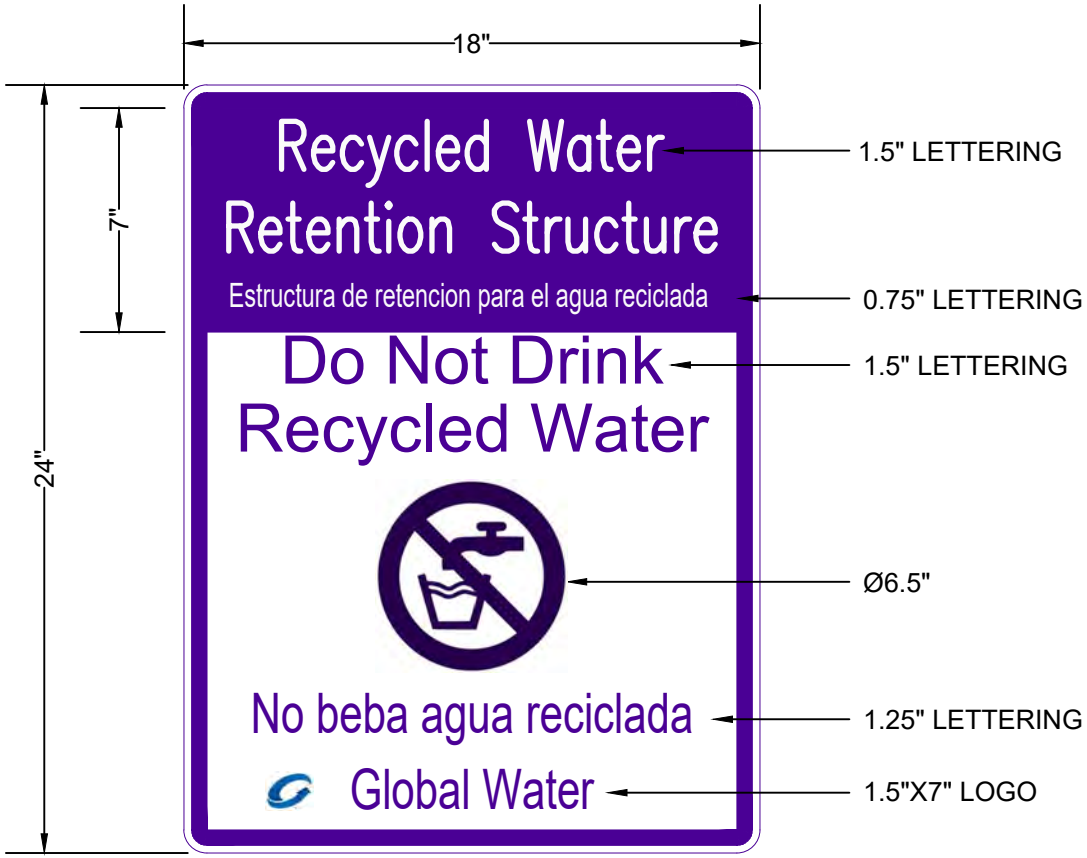

GENERAL NOTE:

CONSTRUCT 18"(W) X 24"(H) SINGLE-SIDED WHITE SIGN FROM 0.080" ALUMINUM (REFLECTIVE SHEETING) WITH PURPLE 3M VINYL LETTERING/GRAPHICS, OR APPROVED EQUAL.

USE ISO 7010-P005 IN ALL PURPLE FOR SYMBOL.

03/2017

GWR Global Water Resources

Recycled Water Signage

DETAIL NO.

132

Q:\Design Standards\Global Water\Standard Details 2017\132 – Recycled Water Signage.dwg

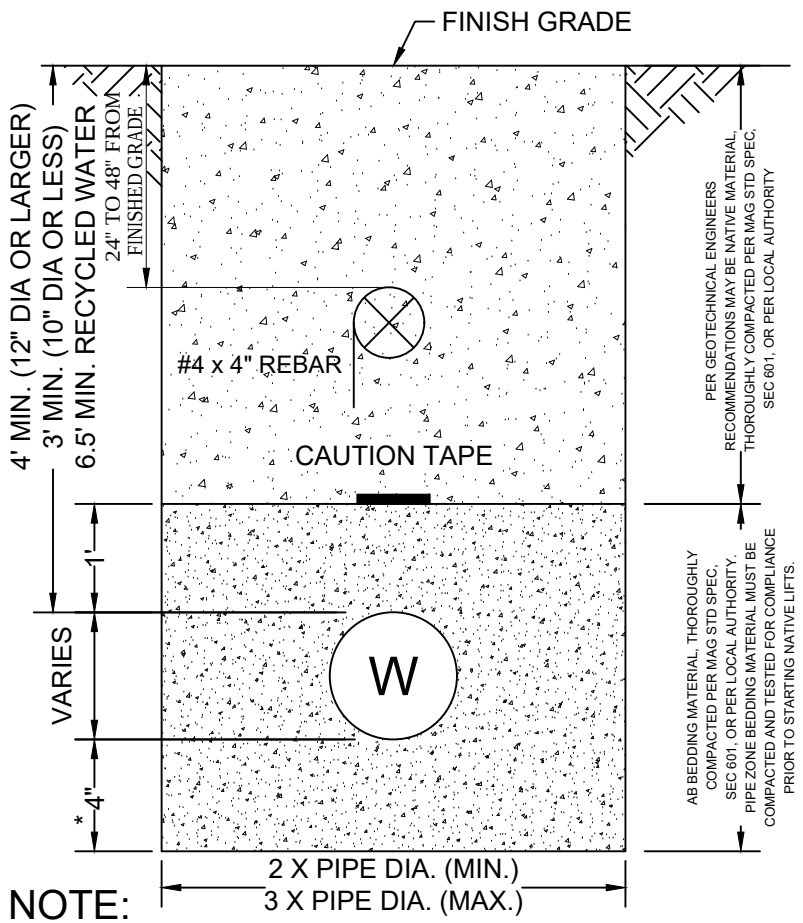

NOTE:

LOCATOR BALL REQUIRED ON ALL 45º AND REALIGNMENTS.

* REQUIRED WHERE TRENCH FOUNDATION IS NOT AS PER MAG SPECIFICATION, SEC 601, OR AS PER LOCAL AUTHORITY.

TYPICAL POTABLE WATER AND RECYCLED WATER TRENCH

N.T.S.

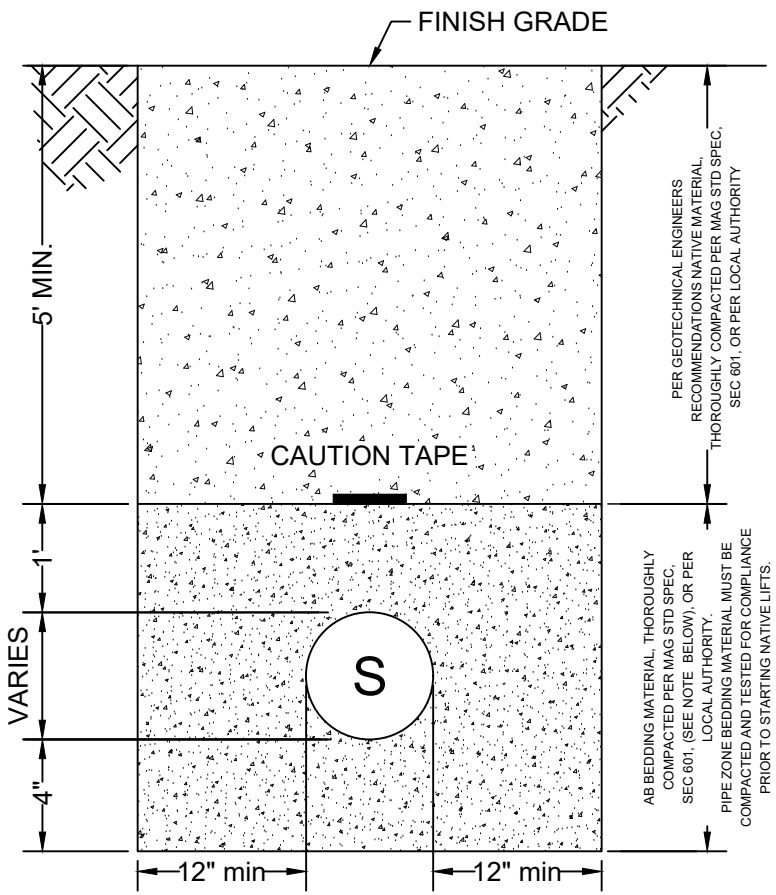

NOTE:

CHIPS MAY BE APPROVED AS BEDDING MATERIAL IN SEWER TRENCHES GREATER THAN 20 FT. DEEP OR PER LOCAL AUTHORITY SPECIFICATION.

TYPICAL SEWER TRENCH

N.T.S.

03/2017

GWR Global Water Resources

Water, Sewer & Reclaimed Water Trench

DETAIL NO.

200

Q:\Design Standards\Global Water\Standard Details 2017\200 - Water, Sewer and Reclaimed Water Trench.dwg

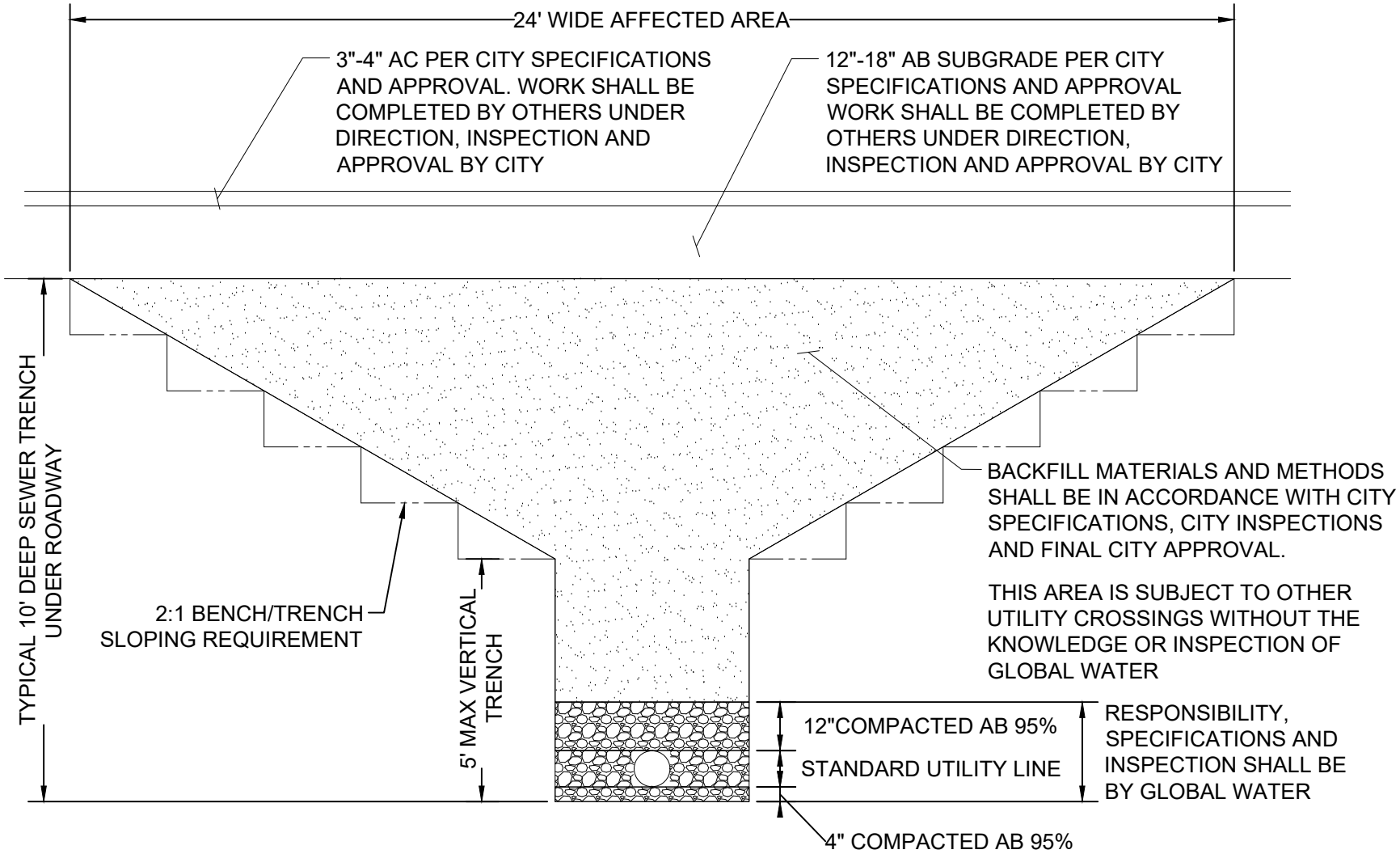

TYPICAL SEWER TRENCH IN SUBDIVISION

N.T.S.

03/2017

GWR Global Water Resources

Utility Trench Detail

DETAIL NO.

201

Q:\Design Standards\Global Water\Standard Details 2017\201 - Utility Trench Detail.dwg

DOUBLE STRAP SADDLES FOR DUCTILE IRON PIPE. WIDE STRAP OR DOUBLE BAND SADDLES FOR C-900 PIPE. MUELLER OR FORD SADDLES ARE APPROVED BY GLOBAL WATER. SADDLES MAY CONSIST OF BRONZE OR STAINLESS STEEL DEPENDING ON THE APPLICATION AND LOCATION. TYPES OF SADDLES MUST BE APPROVED BY GLOBAL WATER BEFORE INSTALLATION FOR ANY APPLICATION.

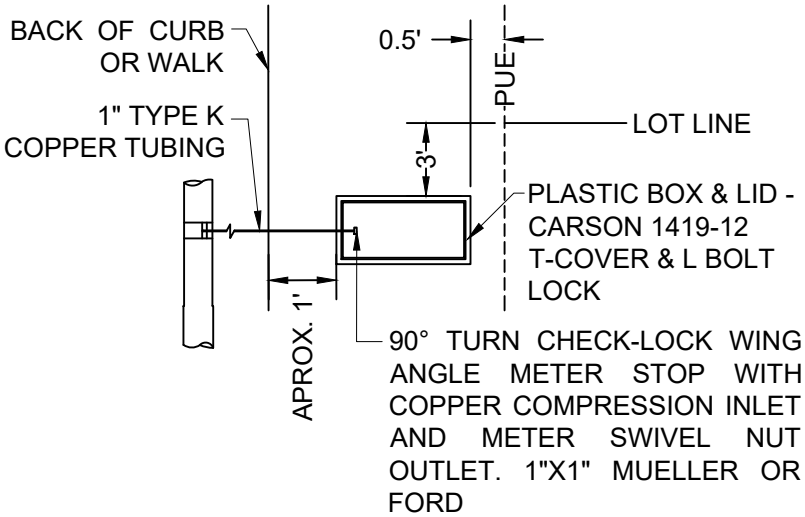

SINGLE WATER SERVICE

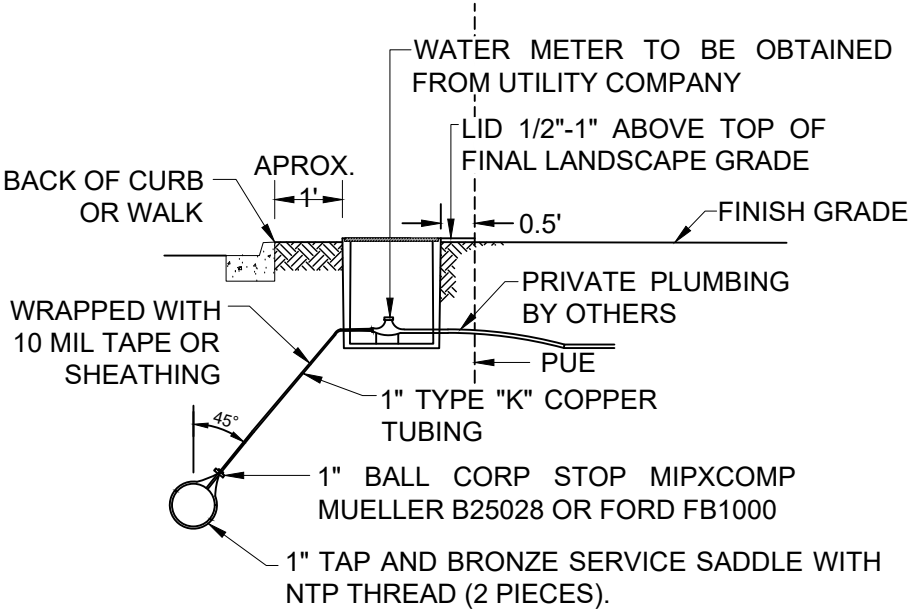

SECTION VIEW

NOTES:

1. NO METAL LIDS WILL BE ACCEPTED.
2. FOR RECYCLED APPLICATIONS USE PURPLE LID LABELED "RECYCLED WATER - DO NOT DRINK"
3. *TWO SINGLE BOXES MAY NEED TO BE USED

03/2017

GWR Global Water Resources

1" Residential Single Water Service Installation

DETAIL NO.

310-1

Q:\Design Standards\Global Water\Standard Details 2017\310-1 - 1 inch Residential single or double water service Installation.dwg

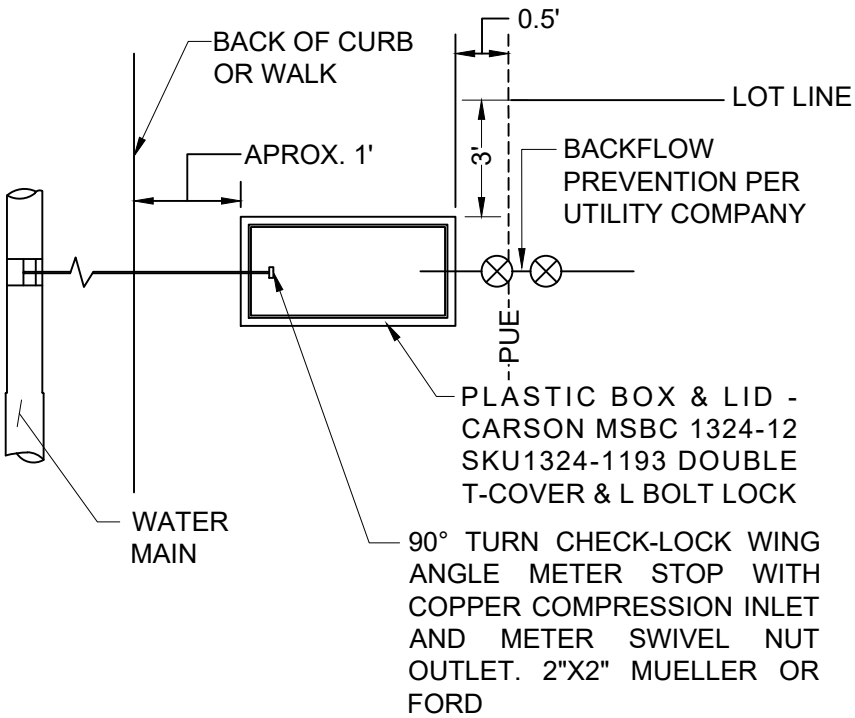

WATER SERVICE

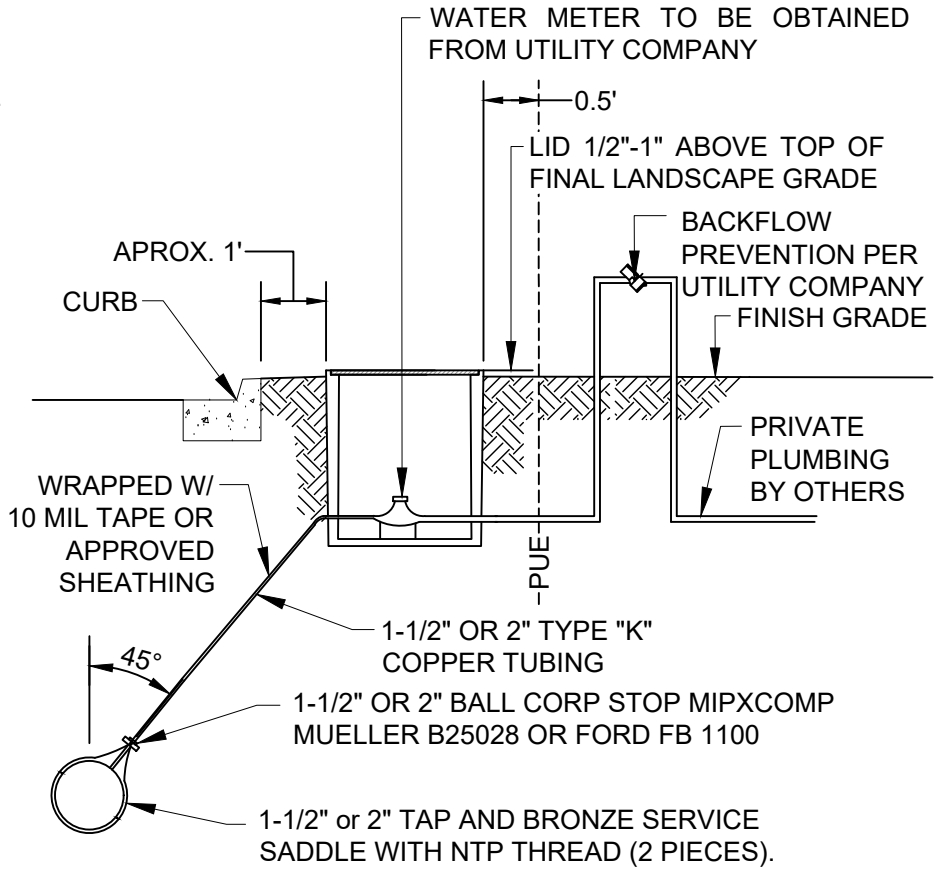

SECTION VIEW

NOTES:

1. METER BOXES IN TRAFFIC AREAS SHALL BE RATED FOR TRAFFIC.
2. DOUBLE STRAP SADDLES FOR DUCTILE IRON PIPE. WIDE STRAP OR DOUBLE BAND SADDLES FOR C-900 PIPE. MUELLER OR FORD SADDLES ARE APPROVED BY GLOBAL WATER RESOURCES.

03/2017

GWR Global Water Resources

1" Commercial / Irrigation Water Service

DETAIL NO.

310-2

Q:\Design Standards\Global Water\Standard Details 2017\310-2 - 1 inch commercial, irrigation water service.dwg

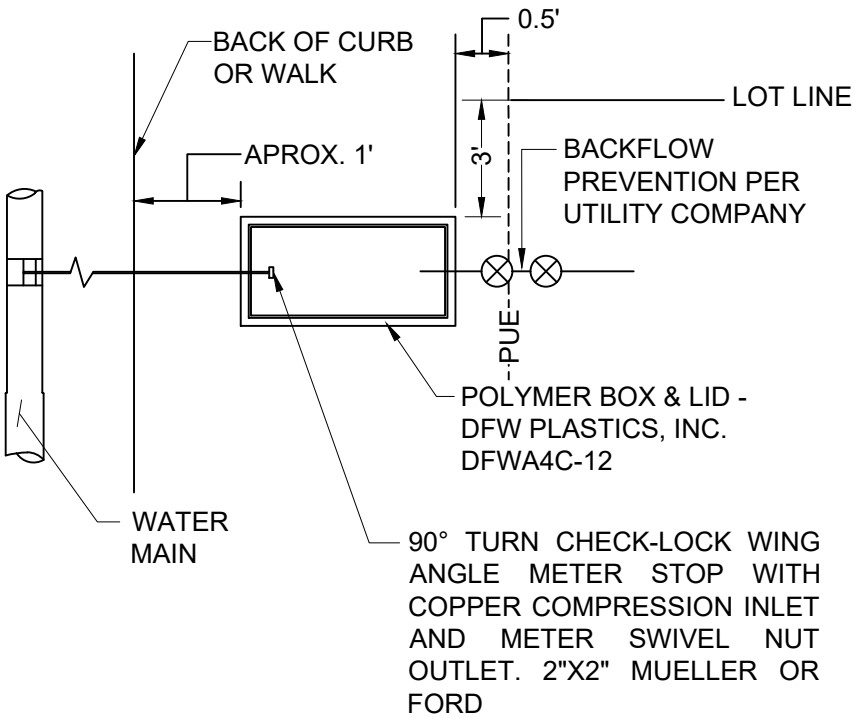

WATER SERVICE

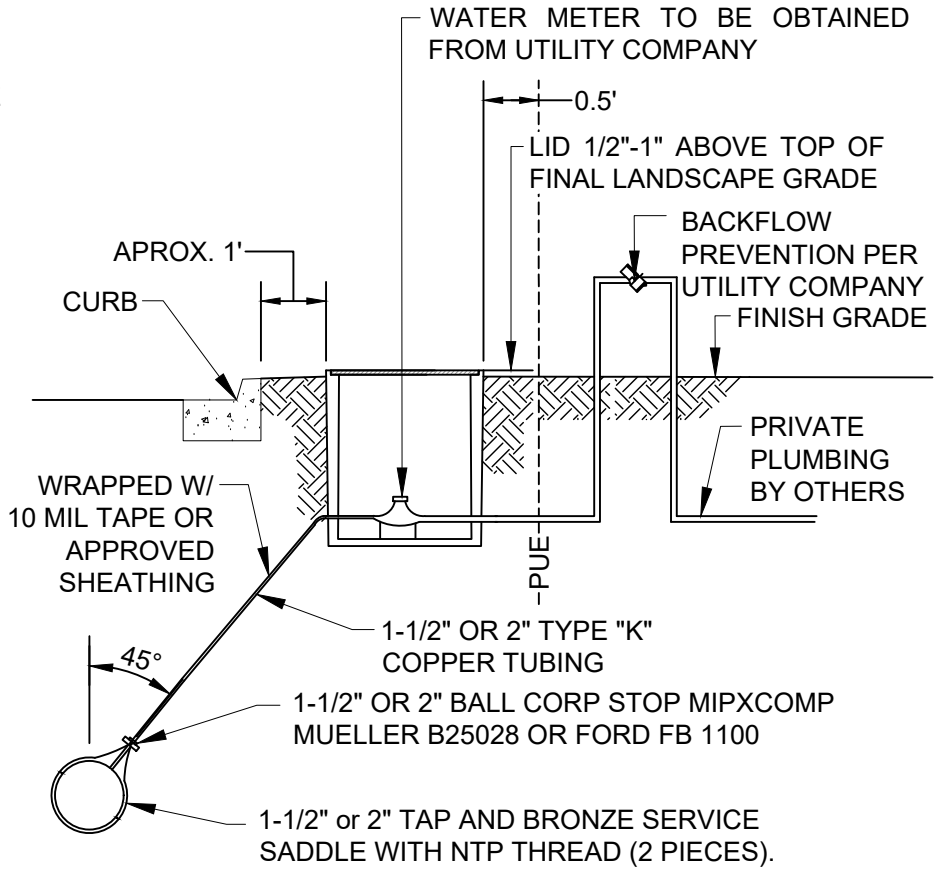

SECTION VIEW

NOTES:

1. METER BOXES IN TRAFFIC AREAS SHALL BE RATED FOR TRAFFIC.
2. DOUBLE STRAP SADDLES FOR DUCTILE IRON PIPE. WIDE STRAP OR DOUBLE BAND SADDLES FOR C-900 PIPE. MUELLER OR FORD SADDLES ARE APPROVED BY GLOBAL WATER RESOURCES.

03/2017

GWR Global Water Resources

1 1/2" TO 2" Commercial / Irrigation Water Service

DETAIL NO.

310-3

Q:\Design Standards\Global Water\Standard Details 2017\310-3 - 1.5 - 2 inch commercial, irrigation water service.dwg

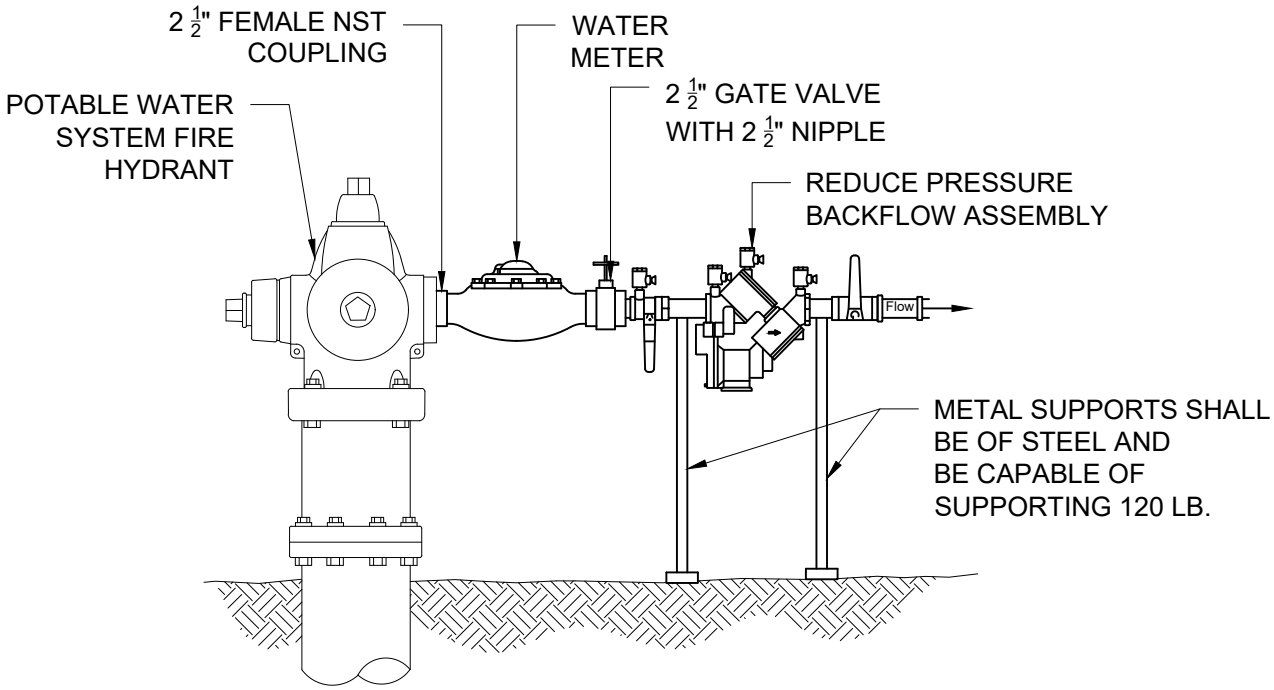

GENERAL NOTES

1. BACKFLOW ASSEMBLY SHALL BE TESTED BY A CERTIFIED BACKFLOW ASSEMBLY TESTER BEFORE USING AND ALSO EACH TIME THE METER IS MOVED. ALL TEST RESULTS MUST BE SUBMITTED TO UTILITY COMPANY WITHIN 24 HOURS OF SETTING THE METER.

2. USER IS LIABLE FOR ANY DAMAGE TO THE HYDRANT AND ALL ATTACHMENTS TO THE HYDRANT.

3. USER MUST USE GATE VALVE TO CONTROL FLOW OF WATER, NOT THE HYDRANT VALVE ASSEMBLY.

03/2017

GWR Global Water Resources

Temporary Hydrant Meter

DETAIL NO.

344-1

Q:\Design Standards\Global Water\Standard Details 2017\344-1 - Temp Hydrant Meter.dwg

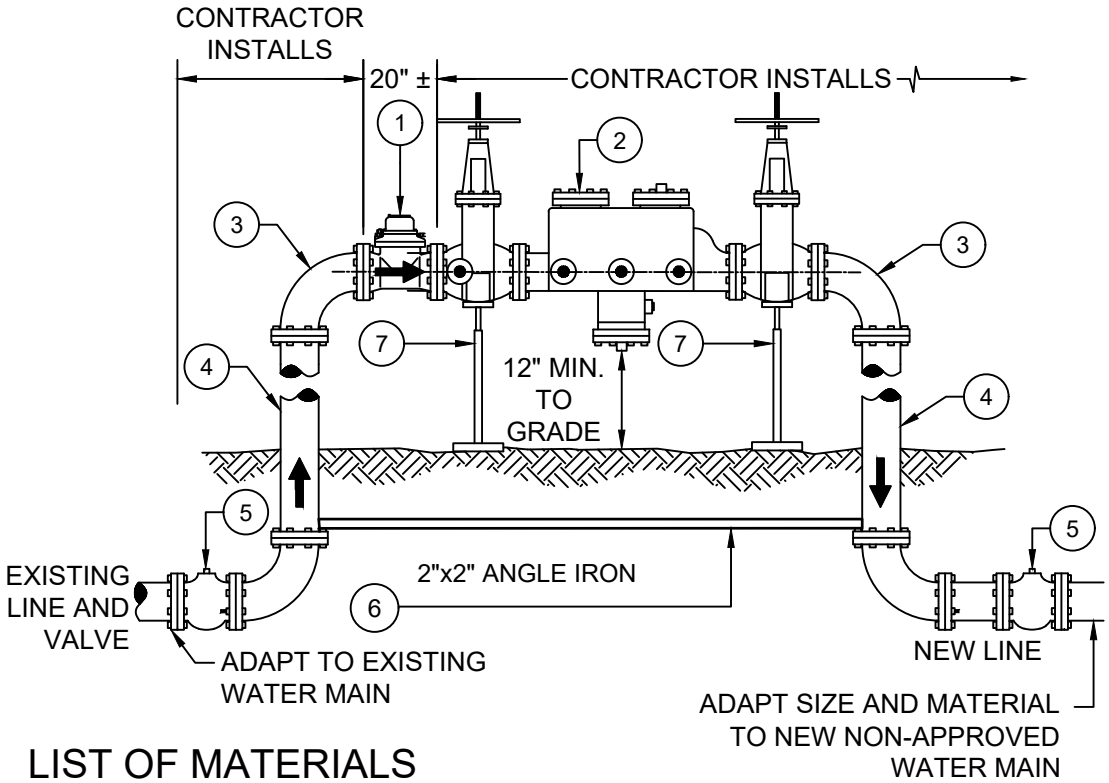

GENERAL NOTES

1. CONTRACTOR TO SUPPLY AND INSTALL ABOVE GROUND PIPING AND FITTINGS TO ACCOMMODATE METER, BACKFLOW PREVENTER AND 2 - 90° BENDS.
2. CONTRACTOR TO REMOVE PIPING AND FITTINGS AFTER ACCEPTANCE OF NEW WATER MAIN AND COMPLETE CONNECTION AS PER MAG STANDARDS.
3. APPROVALS FOR BACKFLOW ASSEMBLIES MUST HAVE SEAL APPROVAL FROM THE U.S.C. & F.C.C.C.H.R. BACKFLOW ASSEMBLIES INSTALLED ON FIRE SUPPRESSION SYSTEMS MUST ALSO HAVE APPROVAL FROM UNDERWRITERS LABORATORIES AND/OR FACTORY MUTUAL RESEARCH CORPORATION.
4. REDUCED PRESSURE PRINCIPLE BACKFLOW ASSEMBLIES MUST BE TESTED BY A CERTIFIED TESTER AFTER INSTALLATION THAT IS RECOGNIZED BY THE UTILITY COMPANY. ALL TEST RESULTS MUST BE SUBMITTED TO UTILITY COMPANY WITHIN 24 HOURS OF SETTING THE METER.

LIST OF MATERIALS

1. TURBINE CONSTRUCTION METER WITH 3" FLANGES, SUPPLIED BY UTILITY COMPANY.
2. APPROVED REDUCED PRESSURE PRINCIPLE BACKFLOW PREVENTION ASSEMBLY, SUPPLIED BY UTILITY COMPANY.
3. FLANGED DUCTILE IRON 90° BEND, SUPPLIED BY CONTRACTOR.
4. DUCTILE IRON SPOOL.
5. LINE VALVES SHALL BE WITHIN A 20' MAXIMUM DISTANCE UPSTREAM AND DOWNSTREAM OF FLOW METER OR AS APPROVED BY THE UTILITY COMPANY, AND SHALL REMAIN IN-PLACE AFTER REMOVAL OF TEMPORARY METER.
6. 1 EACH 2"X 2"X 1/4" ANGLE IRON, COATING TYPE A.H.D. ASPHALTIC PRIMER 719(A) ON BACKSIDE.
7. ADJUSTABLE METAL PIPE SUPPORT (REQUIRED).
8. ENQUIRE ABOUT AVAILABLE SIZES.

03/2017

GWR Global Water Resources

Temporary Construction Meter

DETAIL NO.

344-2

Q:\Design Standards\Global Water\Standard Details 2017\344-2 - Temporary Construction Meters.dwg

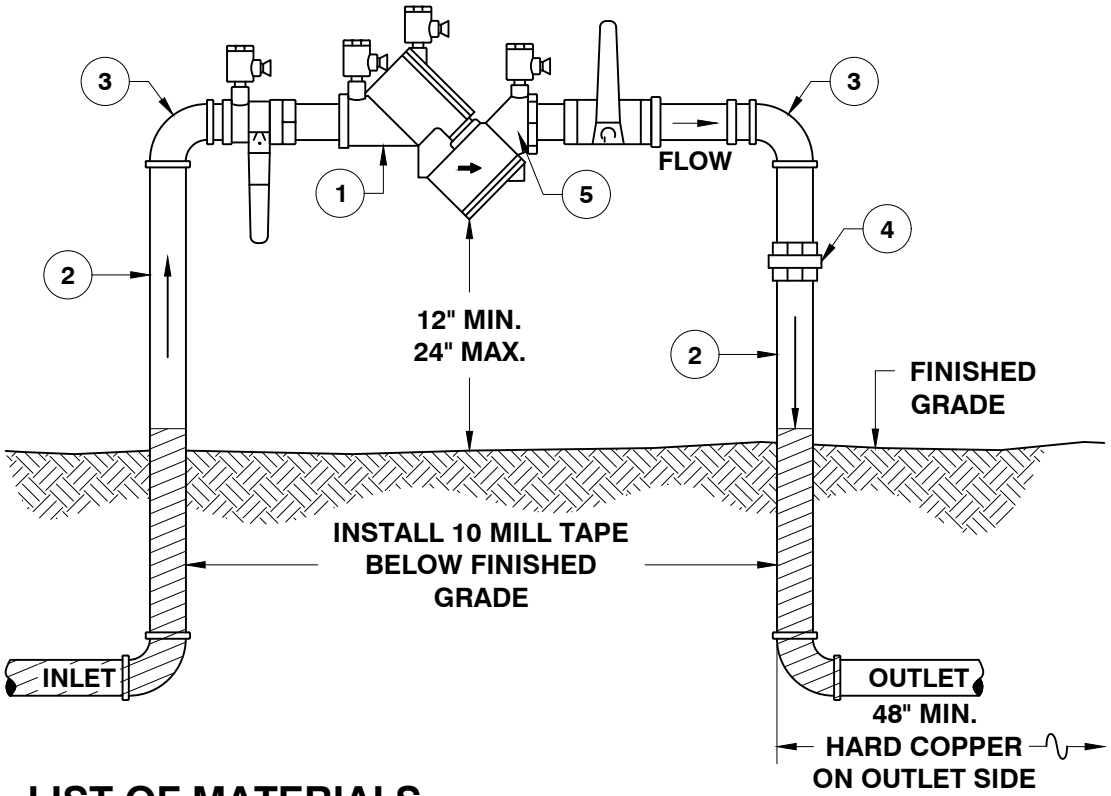

LIST OF MATERIALS

1. APPROVED DOUBLE CHECK VALVE BACKFLOW PREVENTION ASSEMBLY, BALL VALVES INCLUDED.
2. PIPE SPOOL, TYPE "L" HARD COPPER, 3/4" THRU 2".
3. 90° BEND, COPPER, 3/4" THRU 2".
4. PIPE UNION, BRASS OR COPPER.
5. TEST COCKS WITH BRASS PLUGS OR ADAPTORS WITH CAPS INSTALLED. (4 REQUIRED)

GENERAL NOTES

1. BACKFLOW ASSEMBLIES MUST BE TESTED BY A CERTIFIED TESTER THAT IS RECOGNIZED BY THE UTILITY COMPANY. ALL TEST RESULTS MUST BE SUBMITTED TO UTILITY COMPANY WITHIN 24 HOURS OF SETTING THE METER.
2. BACKFLOW PREVENTERS SHALL BE PROTECTED WITH TAN QUALITY ENCLOSURES OR EQUAL
3. BACKFLOW PREVENTERS ENCLOSED BY SCREENING WALLS SHALL MAINTAIN A 24 INCH CLEARANCE AROUND THE ASSEMBLY.
4. FINISHED GRADE UNDERNEATH THE BACKFLOW PREVENTER SHALL BE AT 95% COMPACTION.
5. CALL FOR UNDERGROUND INSPECTION BEFORE BACKFILLING TRENCH.
6. APPROVALS FOR BACKFLOW ASSEMBLIES MUST HAVE SEAL APPROVAL FROM THE U.S.C. & F.C.C.C.H.R BACKFLOW ASSEMBLIES INSTALLED ON FIRE SUPPRESSION SYSTEMS MUST ALSO HAVE APPROVAL FROM UNDERWRITERS LABORATORIES AND/OR FACTORY MUTUAL RESEARCH CORPORATION.
7. INLET SHALL BE APPROXIMATELY 6 INCHES AFTER THE WATER METER ON THE COPPER INLET SIDE.
8. IREPORTS MUST BE SUBMITTED ONLINE AT WWW.GWRESOURCES.COM OR TO BACKFLOW@GWRESOURCES.COM

03/2017

GWR Global Water Resources

Double Check Backflow Preventer (3/4" - 2")

DETAIL NO.

350-1

Q:\Design Standards\Global Water\Standard Details 2017\350-1 - Double Check Valve Backflow Preventer Small.dwg

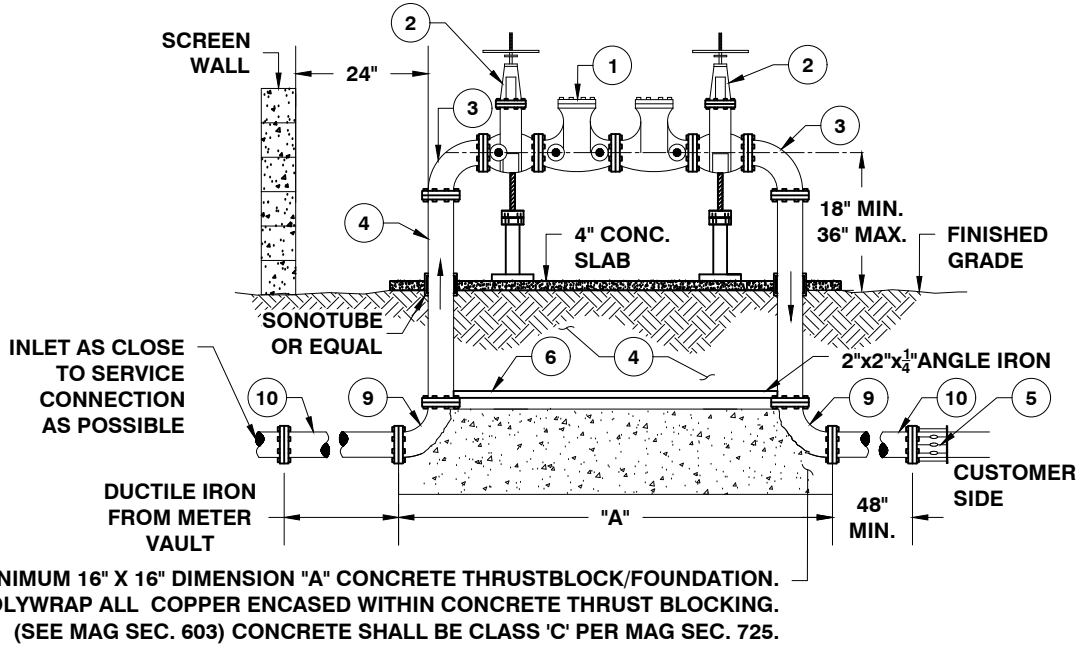

GENERAL NOTES

1. BACKFLOW ASSEMBLIES MUST BE TESTED BY A CERTIFIED TESTER THAT IS RECOGNIZED BY THE UTILITY COMPANY. ALL TEST RESULTS MUST BE SUBMITTED TO UTILITY COMPANY WITHIN 24 HOURS OF SETTING THE METER.
2. BACKFLOW PREVENTERS SHALL BE PROTECTED WITH ASSEMBLY ENCLOSURE AS DIRECTED BY UTILITY COMPANY.
3. BACKFLOW PREVENTERS ENCLOSED BY SCREENING WALLS SHALL MAINTAIN A 24 INCH CLEARANCE AROUND THE ASSEMBLY.
4. FINISHED GRADE UNDERNEATH THE BACKFLOW PREVENTER SHALL BE AT 95% COMPACTION.
5. CALL FOR UNDERGROUND INSPECTION BEFORE BACKFILLING TRENCH.
6. VERTICAL INSTALLATIONS OF ASSEMBLIES ON FIRE SPRINKLER SYSTEMS ARE ALLOWED USING ASSEMBLIES APPROVED FOR USE IN THE VERTICAL POSITION ON FIRE SYSTEMS.
7. APPROVALS FOR BACKFLOW ASSEMBLIES MUST HAVE SEAL APPROVAL FROM THE U.S.C. & F.C.C.C.H.R BACKFLOW ASSEMBLIES INSTALLED ON FIRE SUPPRESSION SYSTEMS MUST ALSO HAVE APPROVAL FROM UNDERWRITERS LABORATORIES AND/OR FACTORY MUTUAL RESEARCH CORPORATION.
8. CONCRETE SLAB MUST BE MINIMUM 24" AROUND THE ASSEMBLY.
9. INLET SHALL BE APPROXIMATELY 6 INCHES AFTER THE WATER METER ON THE INLET SIDE.

LIST OF MATERIALS

1. APPROVED DOUBLE CHECK VALVE BACKFLOW PREVENTION ASSEMBLY.
2. RESILIENT SEATED GATE VALVE.
   O.S. & Y. (FIRE LINE CONNECTION)
   N.R.S. (NON FIRE LINE)
3. 90° BEND FLANGED D.I.P. 3" THRU 10" HORIZONTAL.
4. PIPE SPOOL. FLANGED D.I.P. 3" THRU 10"
5. FLANGED ADAPTER (WHEN REQUIRED).
6. 1 EACH 2"x2"x1/4" ANGLE IRON, COATING TYPE A.H.D. ASPHALTIC PRIMER 719(A). SECURED VIA FITTING BOLT ON BACKSIDE.
7. TEST COCKS WITH BRASS PLUGS OR ADAPTORS WITH CAPS INSTALLED. (4 REQUIRED).
8. ADJUSTABLE METAL PIPE SUPPORTS.
9. FLANGE BY MECHANICAL JOINT MAY BE USED.
10. MEGA LUG OR APPROVED EQUAL MAY BE USED ON UNDERGROUND JOINTS.

03/2017

GWR Global Water Resources

Double Check Backflow Preventer (3" - 10")

DETAIL NO.

350-2

Q:\Design Standards\Global Water\Standard Details 2017\350-2 - Double Check Valve Backflow Preventer Big.dwg

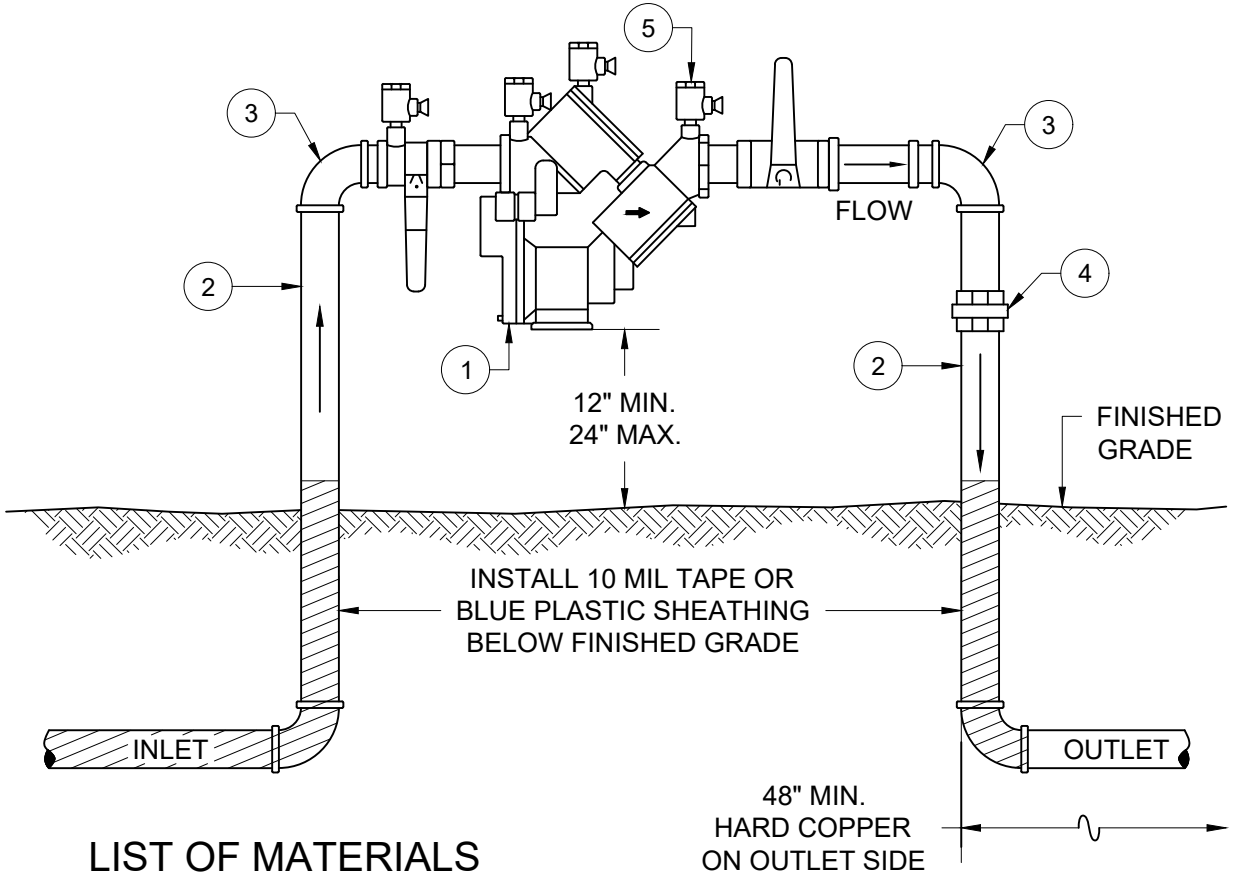

GENERAL NOTES

1. BACKFLOW ASSEMBLIES MUST BE TESTED BY A CERTIFIED TESTER THAT IS RECOGNIZED BY THE UTILITY COMPANY. ALL TEST RESULTS MUST BE SUBMITTED TO UTILITY COMPANY WITHIN 24 HOURS OF SETTING THE METER.
2. BACKFLOW PREVENTERS SHALL BE PROTECTED WITH TAN QUALITY ENCLOSURES OR EQUAL.
3. BACKFLOW PREVENTERS ENCLOSED BY SCREENING WALLS SHALL MAINTAIN A 24 INCH CLEARANCE AROUND THE ASSEMBLY.
4. FINISHED GRADE UNDERNEATH THE BACKFLOW PREVENTER SHALL BE AT 95% COMPACTION.
5. CALL FOR UNDERGROUND INSPECTION BEFORE BACKFILLING TRENCH.
6. APPROVALS FOR BACKFLOW ASSEMBLIES MUST HAVE SEAL APPROVAL FROM THE U.S.C. & F.C.C.C.H.R.
7. INLET SHALL BE APPROXIMATELY 6 INCHES AFTER THE WATER METER ON THE COPPER INLET SIDE.
8. REPORTS MUST BE SUBMITTED ONLINE AT WWW.GWRESOURCES.COM OR TO BACKFLOW@GWRESOURCES.COM

LIST OF MATERIALS

1. APPROVED REDUCED PRESSURE PRINCIPLE BACKFLOW PREVENTION ASSEMBLY, BALL VALVES INCLUDED.
2. PIPE SPOOL, TYPE "L" HARD COPPER, 3/4" THRU 2".
3. 90° BEND, COPPER, 3/4" THRU 2".
4. PIPE UNION, BRASS OR COPPER.
5. TEST COCKS WITH BRASS PLUGS OR ADAPTORS WITH CAPS INSTALLED. (4 REQUIRED)

03/2017

GWR Global Water Resources

Reduced Pressure Backflow Preventer (3/4" - 2")

DETAIL NO.

351-1

Q:\Design Standards\Global Water\Standard Details 2017\351-1 - Reduced Presure Backflow Preventer Small.dwg

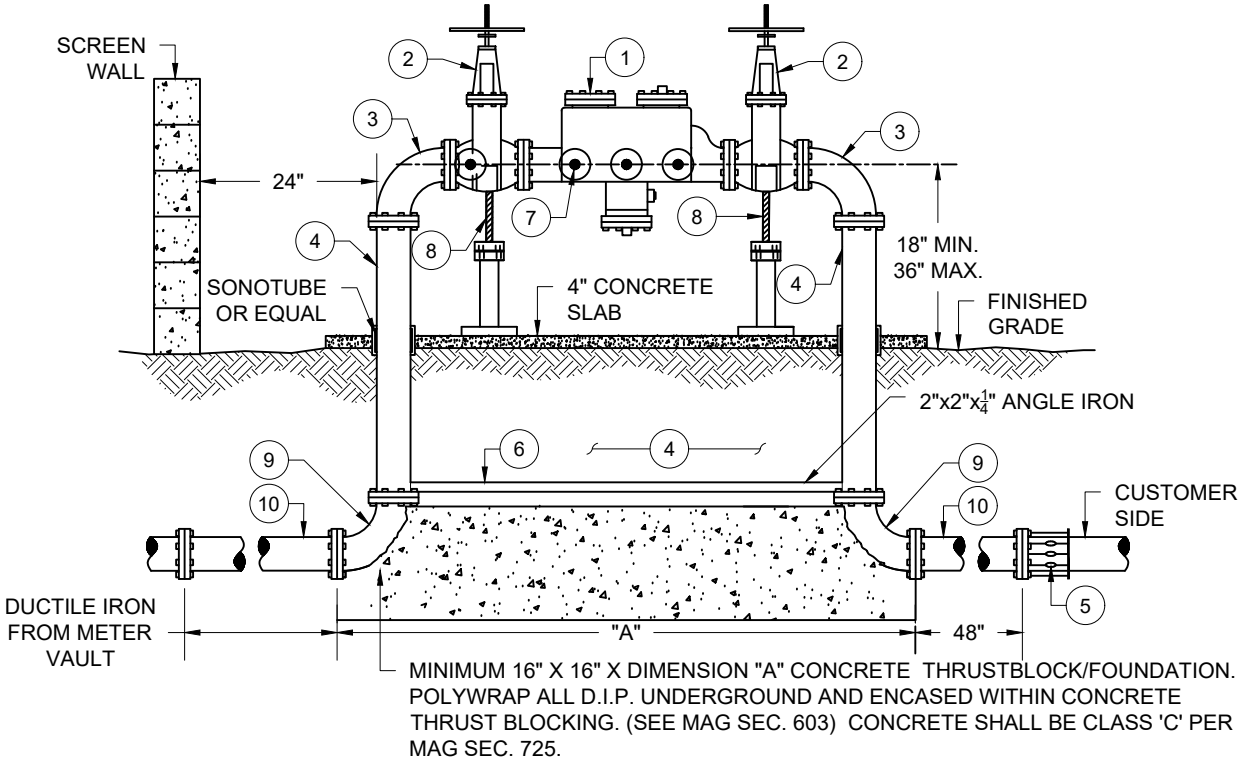

GENERAL NOTES

1. BACKFLOW ASSEMBLIES MUST BE TESTED BY A CERTIFIED TESTER THAT IS RECOGNIZED BY THE UTILITY COMPANY. ALL TEST RESULTS MUST BE SUBMITTED TO UTILITY COMPANY WITHIN 24 HOURS OF SETTING THE METER.
2. BACKFLOW PREVENERS ENCLOSED BY SCREENING WALLS SHALL MAINTAIN A 24 INCH CLEARANCE AROUND THE ASSEMBLY.
3. FINISHED GRADE UNDERNEATH THE BACKFLOW PREVENTER SHALL BE AT 95% COMPACTION.
4. CALL FOR UNDERGROUND INSPECTION BEFORE BACKFILLING TRENCH.
5. APPROVALS FOR BACKFLOW ASSEMBLIES MUST HAVE SEAL APPROVAL FROM THE U.S.C. & F.C.C.C.H.R.
6. CONCRETE SLAB MUST BE MINIMUM 24" AROUND THE ASSEMBLY.
7. REPORTS MUST BE SUBMITTED ONLINE AT WWW.GWRESOURCES.COM OR TO BACKFLOW@GWRESOURCES.COM

LIST OF MATERIALS

1. APPROVED REDUCED PRESSURE PRINCIPLE BACKFLOW PREVENTION ASSEMBLY.
2. RESILIENT SEATED GATE VALVE. O.S. & Y. (FIRE LINE CONNECTION). N.R.S. (NON FIRE LINE)
3. 90° BEND FLANGED D.I.P. 3" THRU 10" HORIZONTAL.
4. PIPE SPOOL. FLANGED D.I.P. 3" THRU 10".
5. FLANGED ADAPTER (WHEN REQUIRED).
6. 1 EACH 2"X 2X 1/4"" ANGLE IRON COATING TYPE A.H.D. ASPHALTIC PRIMER 719(A). SECURED VIA FITTING BOLT ON THE BACKSIDE.
7. TEST COCKS WITH BRASS PLUGS OR ADAPTORS WITH CAPS INSTALLED. (4 REQUIRED)
8. ADJUSTABLE METAL PIPE SUPPORTS.
9. FLANGE BY MECHANICAL JOINT MAY BE USED.
10. MEGA LUG OR APPROVED EQUAL MAY BE USED ON UNDERGROUND JOINTS.

03/2017

GWR Global Water Resources

Reduced Pressure Backflow Preventer (3" - 10")

DETAIL NO.

351-2

Q:\Design Standards\Global Water\Standard Details 2017\351-2 - Reduced Presure Backflow Preventer Big.dwg

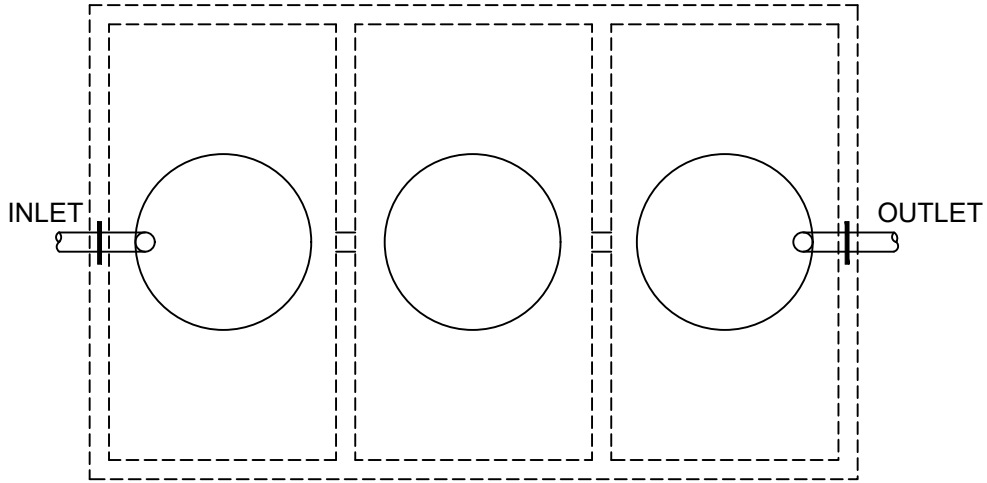

PLAN

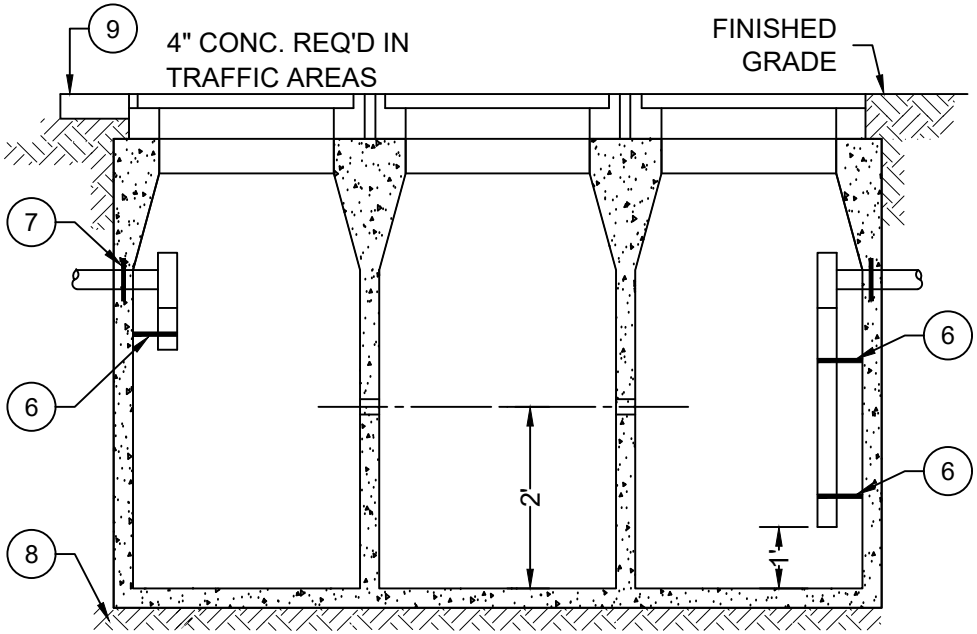

SECTION

GENERAL NOTES:

1. PRE-MANUFACTURED TANK AND MANHOLE FRAME AND COVER SHALL BE PER ENGINEER.
2. ALL INTERCEPTORS SHALL BE LOCATED ON PRIVATE PROPERTY.
3. LOCATE INTERCEPTORS OUTSIDE OF BUILDINGS IN A LOCATION ACCESSIBLE TO WASTE HAULER.
4. TANK CAPACITY TO BE DETERMINED AT THE TIME OF PERMIT APPLICATION. ENGINEER SHALL VERIFY SIZE OF INTERCEPTOR FOR PROPOSED AND FUTURE CONNECTIONS.
5. ALTERNATE DESIGN BY A REGISTERED ENGINEER MAY BE APPROVED BY GLOBAL WATER RESOURCES.
6. STAINLESS STEEL CLAMP AND BOLTS 3' ON-CENTER.
7. A WATER STOP CONSISTING OF A STANDARD MANHOLE ADOPTER GASKET SHALL BE GROUTED INTO THE INTERCEPTOR WALL NEAR THE CENTER OF THE INLET AND OUTLET WALLS.
8. PLACE 3" MINIMUM BEDDING MATERIAL PER MAG SECTION 601.
9. CONCRETE SLAB TO EXTEND 24" MINIMUM BEYOND ALL SIDES OF TANK.
10. INSTALL INTERCEPTOR PER MANUFACTURER'S SPECIFICATIONS.
11. PIPE FITTINGS TO BE 4" SCH-40 PVC.
12. ALL SURFACE WATER MUST DRAIN AWAY FROM MANHOLES.
13. ALL WASTE MUST ENTER THROUGH INLET FITTINGS ONLY.
14. PROTECTIVE COATING SHALL COVER ALL INTERNAL SURFACES AND MEET ASTM-309 CRITERIA.

03/2017

GWR Global Water Resources

3 - Stage Grease Interceptor

DETAIL NO.

355-1

Q:\Design Standards\Global Water\Standard Details 2017\355-1 - 3-Stage Grease Interceptor.dwg

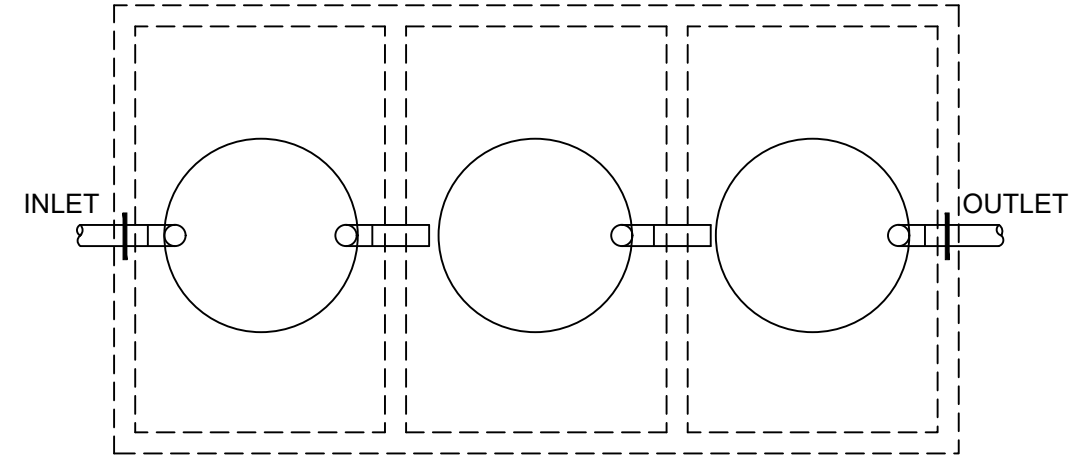

PLAN

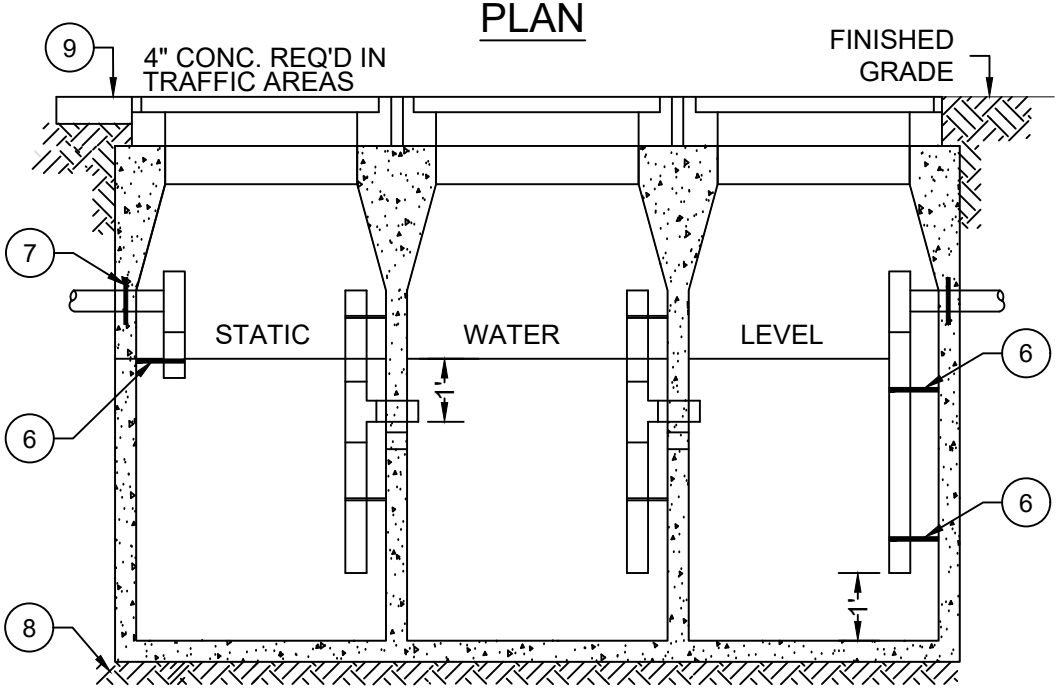

SECTION

GENERAL NOTES:

1. PRE-MANUFACTURED TANK AND MANHOLE FRAME AND COVER SHALL BE PER ENGINEER.
2. ALL INTERCEPTORS SHALL BE LOCATED ON PRIVATE PROPERTY.
3. LOCATE INTERCEPTORS OUTSIDE OF BUILDINGS IN A LOCATION ACCESSIBLE TO WASTE HAULER.
4. TANK CAPACITY TO BE DETERMINED AT THE TIME OF PERMIT APPLICATION. ENGINEER SHALL VERIFY SIZE OF INTERCEPTOR FOR PROPOSED AND FUTURE CONNECTIONS.
5. ALTERNATE DESIGN BY A REGISTERED ENGINEER MAY BE APPROVED BY GLOBAL WATER RESOURCES.
6. STAINLESS STEEL CLAMP AND BOLTS 3' ON-CENTER.
7. A WATER STOP CONSISTING OF A STANDARD MANHOLE ADOPTER GASKET SHALL BE GROUTED INTO THE INTERCEPTOR WALL NEAR THE CENTER OF THE INLET AND OUTLET WALLS.
8. PLACE 3" MINIMUM BEDDING MATERIAL PER MAG SECTION 601.
9. CONCRETE SLAB TO EXTEND 24" MINIMUM BEYOND ALL SIDES OF TANK.
10. INSTALL INTERCEPTOR PER MANUFACTURER'S SPECIFICATIONS.
11. PIPE FITTINGS TO BE 4" SCH-40 PVC.
12. ALL SURFACE WATER MUST DRAIN AWAY FROM MANHOLES.
13. ALL WASTE MUST ENTER THROUGH INLET FITTINGS ONLY.
14. PROTECTIVE COATING SHALL COVER ALL INTERNAL SURFACES AND MEET ASTM-309 CRITERIA.

03/2017

GWR Global Water Resources

3 - Stage Sand & Grease Interceptor

DETAIL NO.

355-2

Q:\Design Standards\Global Water\Standard Details 2017\355-2 - 3-Stage Sand & Grease Interceptor.dwg

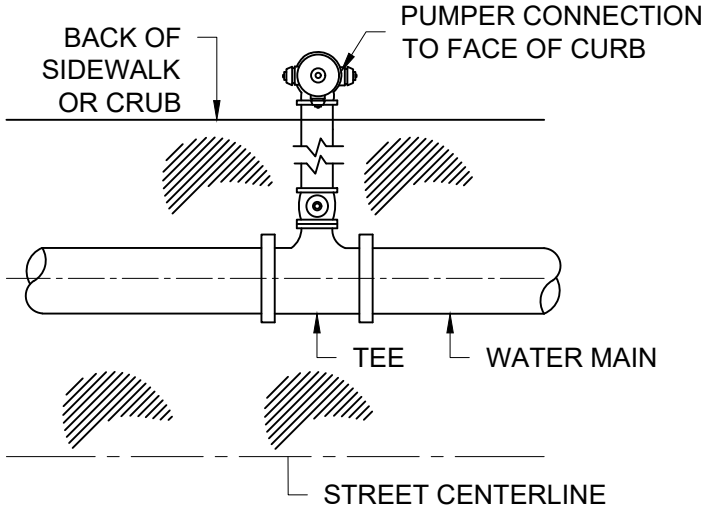

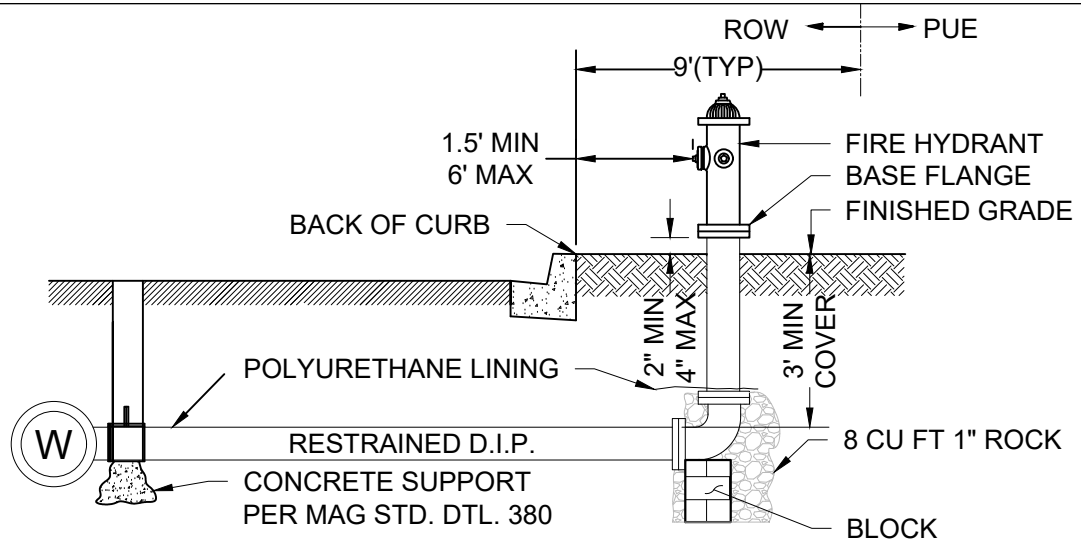

WITHOUT SIDEWALK

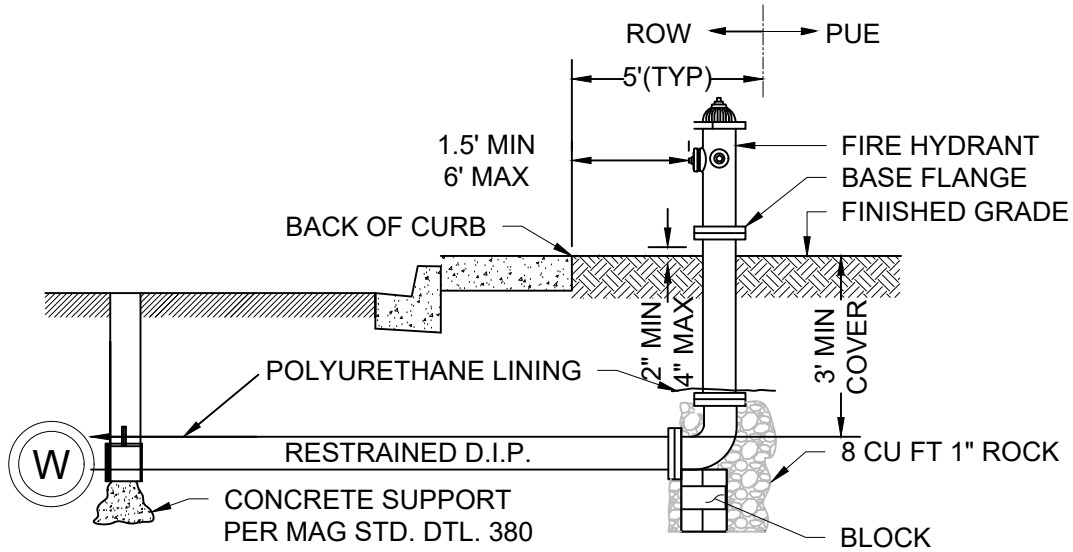

WITH SIDEWALK

03/2017

GENERAL NOTES:

1. ALL VALVE BOX COVERS SHALL BE LEVEL WITH THE ADJACENT TOP OF CURB OR BACK OF SIDEWALK. NO VALVES SHALL BE LOCATED IN SIDEWALKS.
2. ALL FIRE HYDRANTS SHALL BE CLOW MEDALLION OR MUELLER IN SPECIFIED AREAS WITH ONE 5-¼" MAIN VALVE OPENING, ONE 4-1/2" NST PUMPER CONNECTION, AND TWO 2-½" NST HOSE CONNECTIONS. NO SUBSTITUTIONS ALLOWED.
3. INSTALL POLYURETHANE LINING ABOVE ELBOW. INSTALL THRUST BLOCKING PER MAG.
4. INSTALL POLYWRAP FROM ABOVE WEEP HOLES TO ABOVE GROUND.
5. RESTRAIN ALL JOINTS AND FITTINGS PER MAG 303.

GWR Global Water Resources

Fire Hydrant Assembly - Main in Roadway

DETAIL NO.

360-1

Q:\Design Standards\Global Water\Standard Details 2017\360-1 - Fire Hydrant Assembly Main in Roadway.dwg

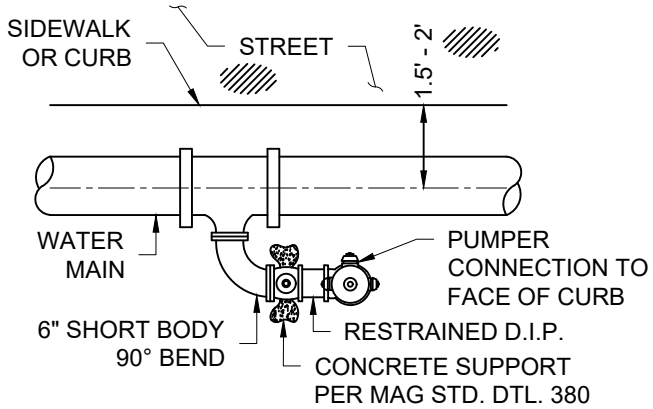

WATER MAIN BEHIND CURB/SIDEWALK

NOTE: WHERE WATER MAIN IS NOT BEHIND CURB OR SIDEWALK, USE FIRE HYDRANT ASSEMBLY - TYPE "B"

GENERAL NOTES:

1. ALL VALVE BOX COVERS SHALL BE LEVEL WITH THE ADJACENT TOP OF CURB OR BACK OF SIDEWALK. NO VALVES SHALL BE LOCATED IN SIDEWALKS.
2. ALL FIRE HYDRANTS SHALL BE CLOW MEDALLION OR MUELLER IN SPECIFIED AREAS WITH ONE 5-¼" MAIN VALVE OPENING, ONE 4-1/2" NST PUMPER CONNECTION, AND TWO 2-½" NST HOSE CONNECTIONS. NO SUBSTITUTIONS ALLOWED.
3. INSTALL POLYURETHANE LINING ABOVE ELBOW. INSTALL THRUST BLOCKING PER MAG.
4. INSTALL POLYWRAP FROM ABOVE WEEP HOLES TO ABOVE GROUND.
5. RESTRAIN ALL JOINTS AND FITTINGS PER MAG 303.
6. JOINTS BETWEEN THE VALVE AND THE MAIN SHALL BE FLANGED TYPE. JOINTS BETWEEN THE VALVE AND HYDRANT SHALL BE RESTRAINT OR MECHANICAL TYPE.
7. A FLANGE JOINT BY MECHANICAL JOINT VALVE SHALL BE USED AS THE TRANSITION BETWEEN THE JOINT TYPES.

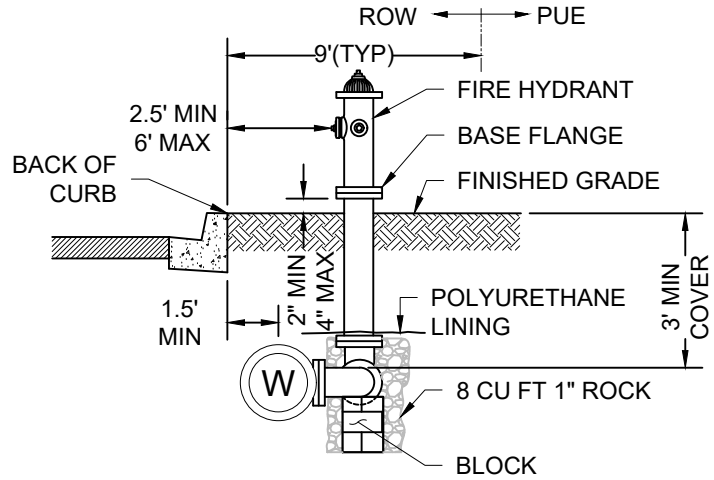

WITHOUT SIDEWALK

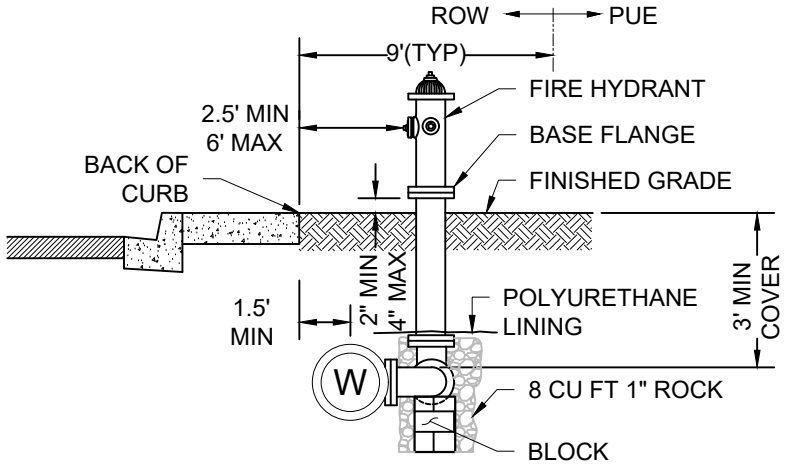

WITH SIDEWALK

03/2017

GWR Global Water Resources

Fire Hydrant Assembly - Main Behind Curb

NOTE: EXISTING MAINS OR PRIOR APPROVED CIRCUMSTANCES ONLY.

DETAIL NO.

360-2

Q:\Design Standards\Global Water\Standard Details 2017\360-2 - Fire Hydrant Assembly Main Behind Curb.dwg

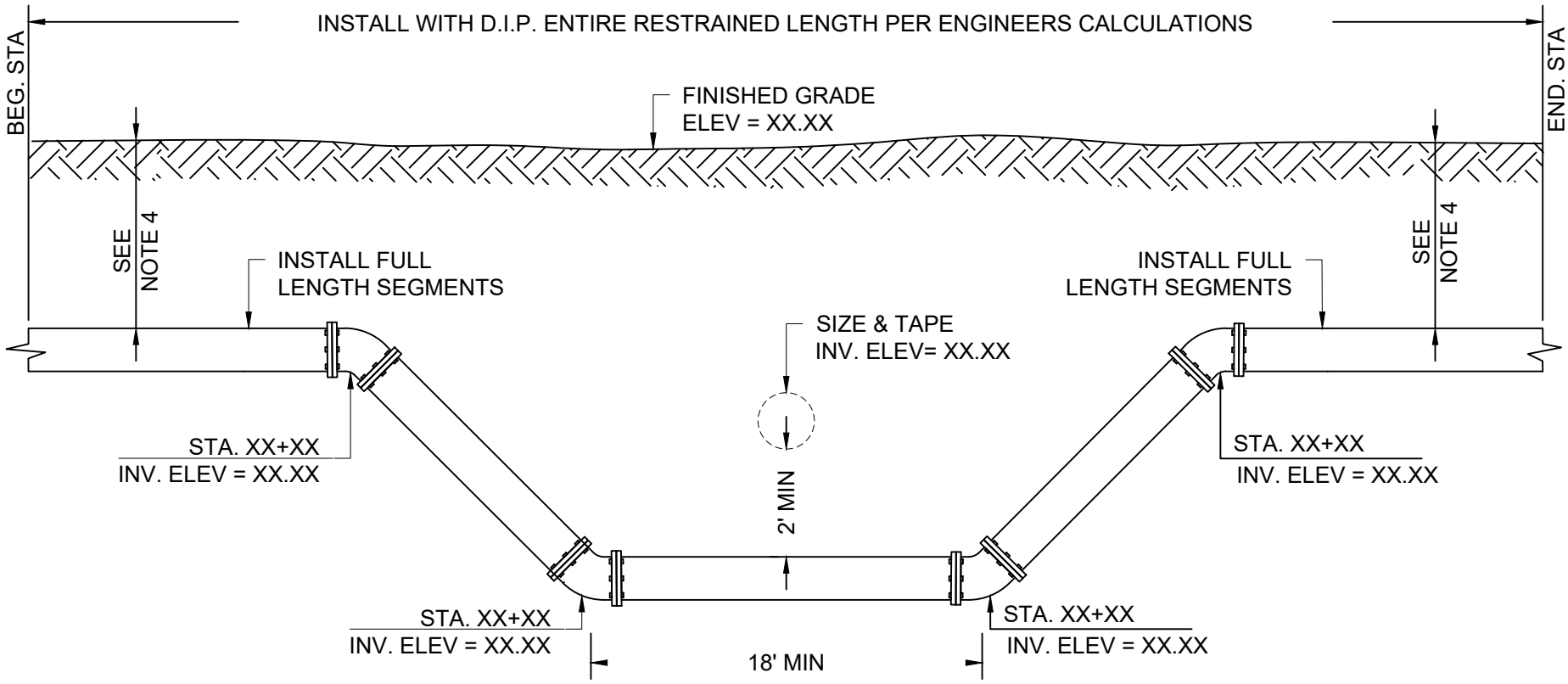

GENERAL NOTES:

1. ALL BENDS WILL BE RESTRAINED PER MAG DTLS. 303-1 & 303-2.
2. ALL VERTICAL REALIGNMENTS NO MATTER WHAT SIZE SHALL BE DETAILED IN PROFILE VIEW.
3. CONCRETE VERTICAL RESTRAINTS ARE NOT ALLOWED .
4. 3' MINIMUM COVER FOR 8" WATER LINE; 4' MINIMUM COVER FOR 12" OR LARGER WATER LINE.
5. ALL VERTICAL PIPE REALIGNMENT SHALL BE CONSTRUCTED WITH D.I.P. THE ENTIRE D.I.P. ALIGNMENT SHALL BE RESTRAINED AND POLYETHYLENE WRAPPED.
6. INSTALL ARV UNLESS UPSTREAM AND DOWNSTREAM PIPE IS INSTALLED WITH A POSITIVE SLOPE. VERIFY WITH UTILITY COMPANY.
7. DIMENSIONS SHALL BE SHOWN ON PLANS WHERE INDICATED WITH STA. XX+XX AND INV. ELEV = XX.XX.

03/2017

GWR Global Water Resources

Vertical Pipe Realignment

DETAIL NO.

370

Q:\Design Standards\Global Water\Standard Details 2017\370 - Vertical Pipe Realignment.dwg

WATER LINE EXCLUSION AND EXTRA PROTECTION ZONE *

GRAVITY SANITARY SEWER

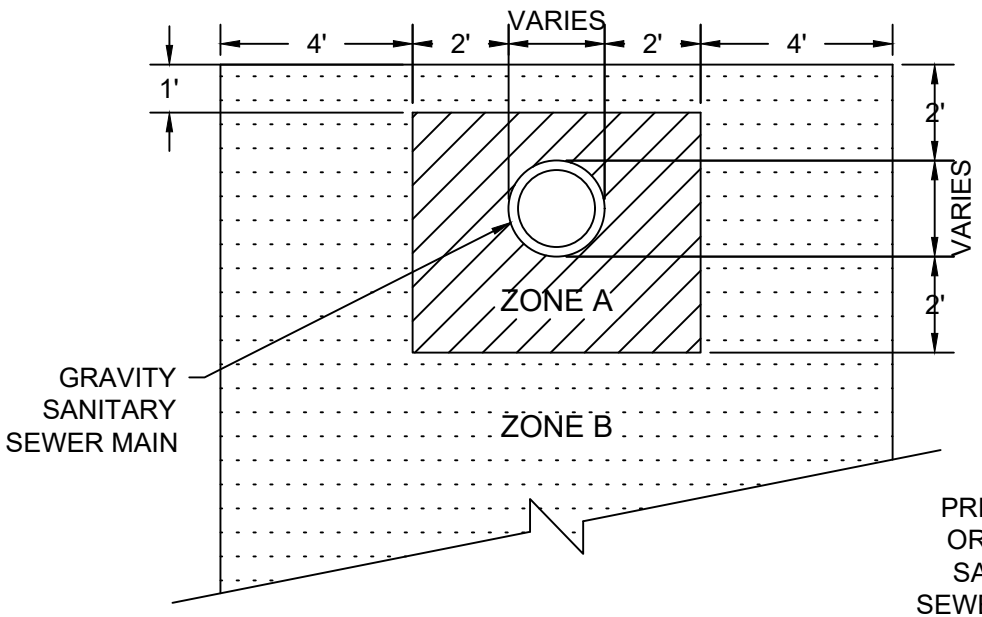

PRESSURIZED SANITARY SEWER

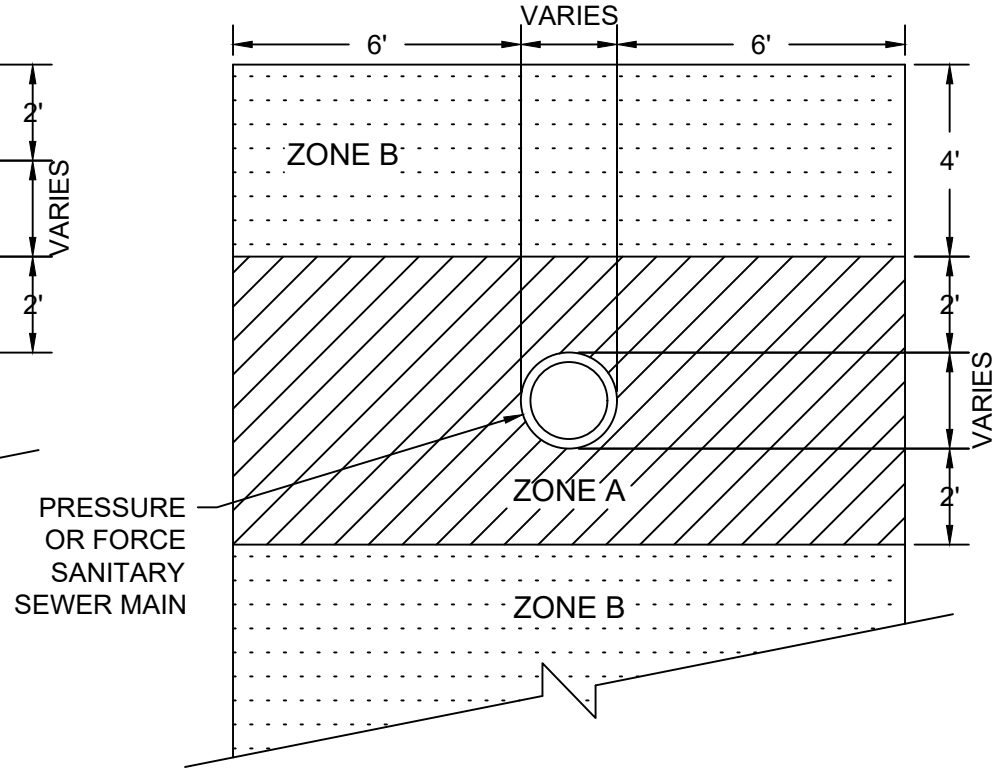

GENERAL NOTES:

1. ZONE A: NO WATER LINES ALLOWED/MINIMUM SEPARATION.
2. ZONE B: EXTRA PROTECTION REQUIRED FOR WATER LINES.
3. * REFER TO MAG STANDARD SPECIFICATION 610, WATER LINE CONSTRUCTION.

03/2017

GWR Global Water Resources

Water And Sanitary Sewer Separation/Protection

DETAIL NO.

370-1

Q:\Design Standards\Global Water\Standard Details 2017\370-1 - Water and Sanitary Sewer Separation.dwg

WATER LINE EXTRA PROTECTION ZONE
DUCTILE IRON PIPE WITH RESTRAINED OR MECHANICAL JOINTS

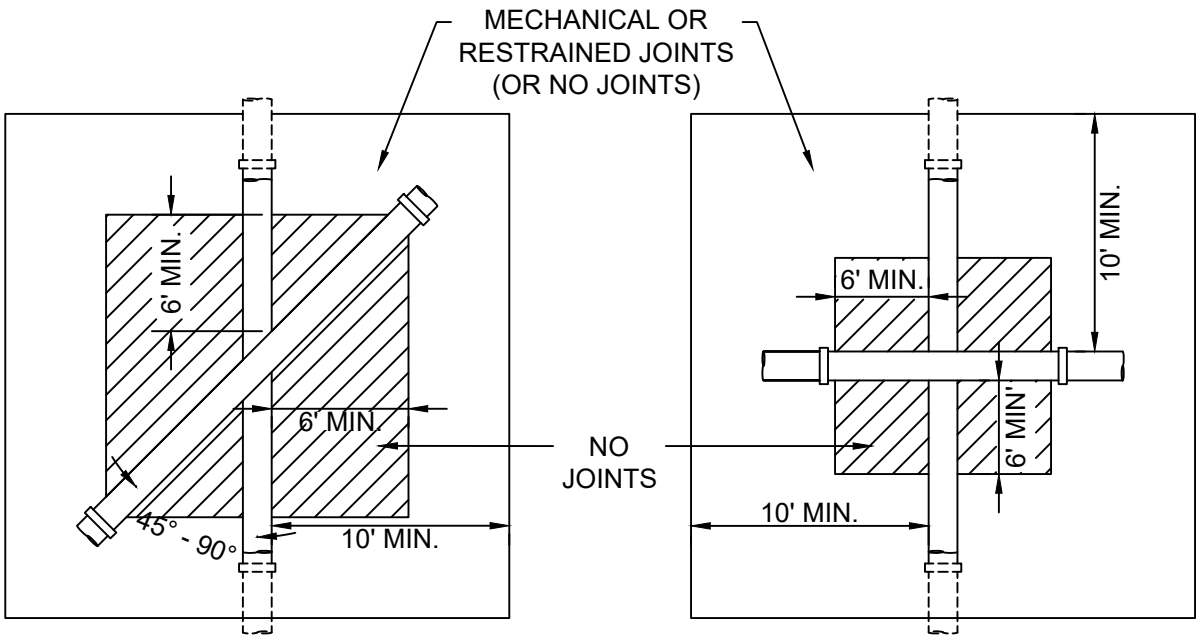

EXTRA PROTECTION DUCTILE IRON PIPE
(GRAVITY OR PRESSURIZED) SEWER LINE

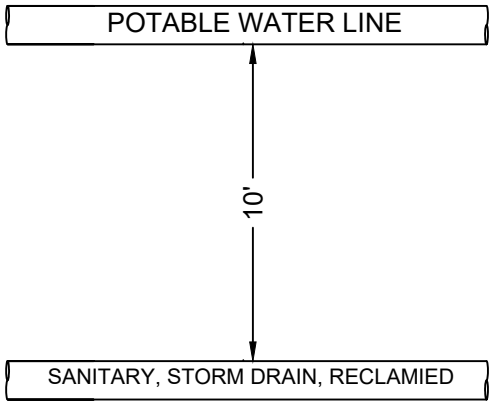

HORIZONTAL LINE SPACING

GENERAL NOTES:

1. REFER TO MAG STANDARD SPECIFICATION 610.
2. MINIMUM VERTICAL SPACE BETWEEN PIPES SHALL BE 24 INCHES.
3. D.I.P. WITH JOINT SPACED GREATER THAN 6 FEET AND VERTICAL SEPARATION GREATER THAN 24 INCHES WILL NOT REQUIRE ADDITIONAL PROTECTION TO A POTABLE WATER LINE.

03/2017

GWR Global Water Resources

Water And Sanitary Sewer Separation/Protection

DETAIL NO.

370-2

Q:\Design Standards\Global Water\Standard Details 2017\370-2 Water and Sanitary Sewer Separation Protection.dwg

ENCASEMENT FOR PIPE CROSSING*

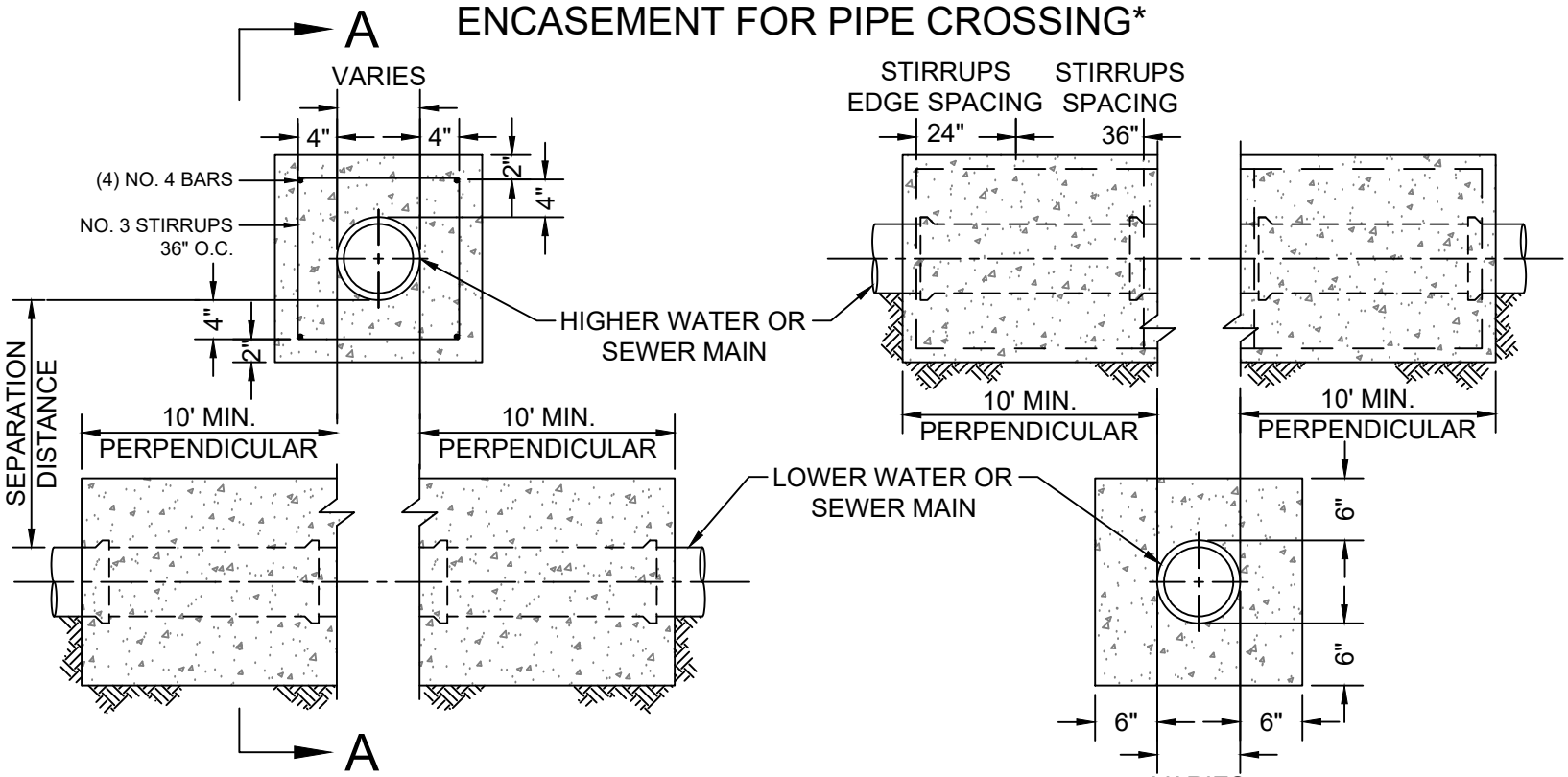

SECTION A-A

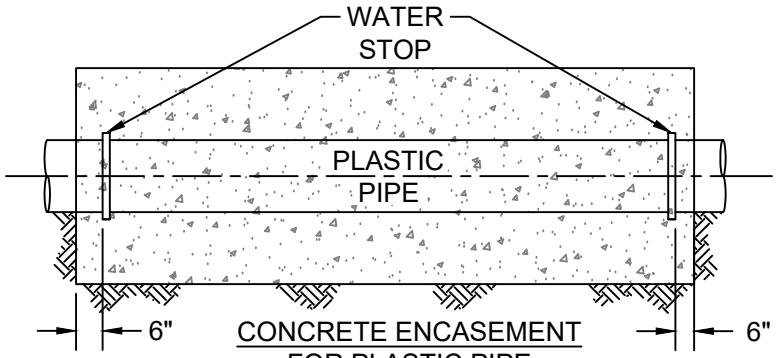

CONCRETE ENCASEMENT FOR PLASTIC PIPE

GENERAL NOTES:

1. CLASS 'C' CONCRETE AS PER SECTION 725.
2. *REFER TO MAG STANDARD SPECIFICATION SECTION 610.
3. WHEN CONCRETE ENCASING PLASTIC PIPES, INSTALLATION OF AN EXPANDABLE WATER STOP MATERIAL (BUTYL, VOCLAY OR EQUAL) SHALL BE INSTALLED AROUND THE EXTERIOR OF THE PLASTIC PIPE TO FORM A SEAL BETWEEN THE PIPE AND THE ENCASEMENT. DO NOT INSTALL THE EXPANDABLE WATER STOP MATERIAL WITHIN 6 INCHES OF THE CONCRETE ENCASEMENT EDGE.
4. REFER TO SECTION A FOR REBAR PLACEMENT.

03/2017

GWR Global Water Resources

Water And Sanitary Sewer Separation/Protection

DETAIL NO.

370-3

Q:\Design Standards\Global Water\Standard Details 2017\370-3 - Water and Sanitary Sewer Separation Protection.dwg

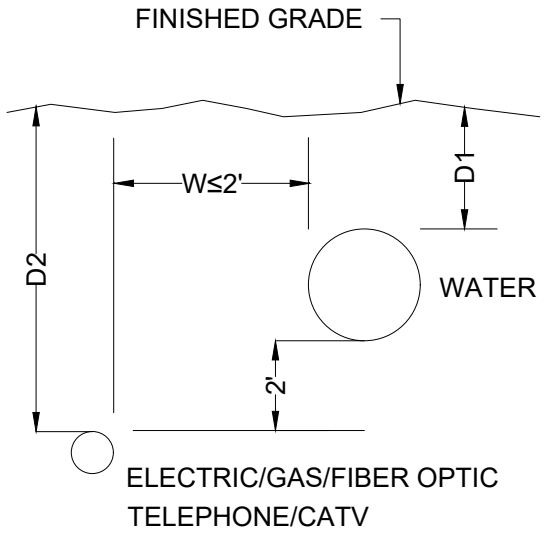

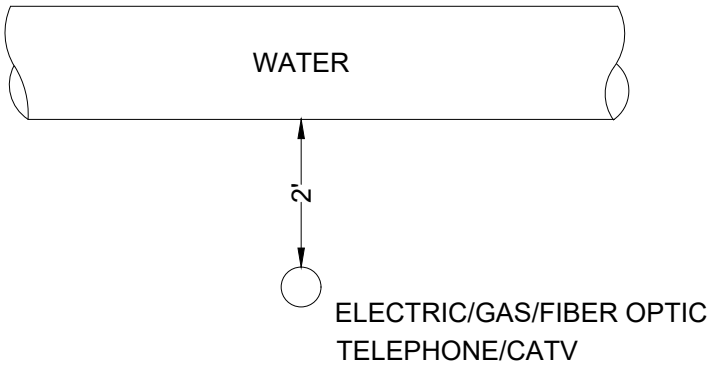

CROSSING

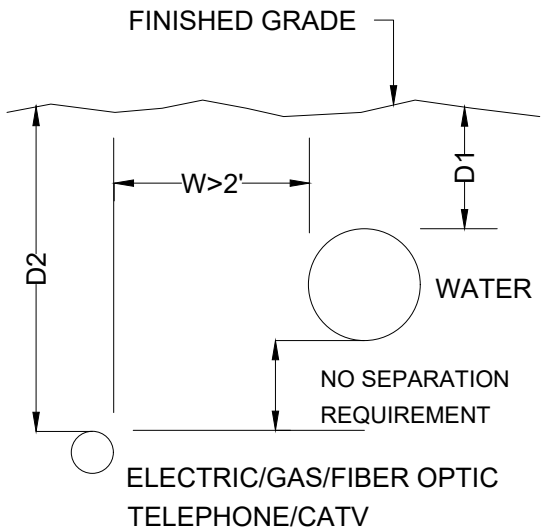

LEGEND:

D1= 3' MIN. FOR PIPE < 12" DIA.
4' MIN. FOR PIPE = 12" DIA.
5' MIN. FOR PIPE > 12" DIA.

D2= MINIMUM COVER

W = HORIZONTAL SEPARATION

GENERAL NOTES:

1. ELECTRIC SEPARATION REQUIREMENTS ARE FOR PRIMARY ELECTRIC CONDUCTORS ONLY. FOR SERVICE CONDUCTORS SEE PLANS.

2. PRIMARY ELECTRIC, GAS, TELEPHONE, CABLE TV OR FIBER OPTIC LINES SHALL NOT CROSS ABOVE A WATER LINE WITHOUT WRITTEN APPROVAL FROM GLOBAL WATER RESOURCES.

03/2017

GWR Global Water Resources

Minimum Utility Separation Requirements

DETAIL NO.

372

Q:\Design Standards\Global Water\Standard Details 2017\372 - Minimum Utility Separation Requirements.dwg

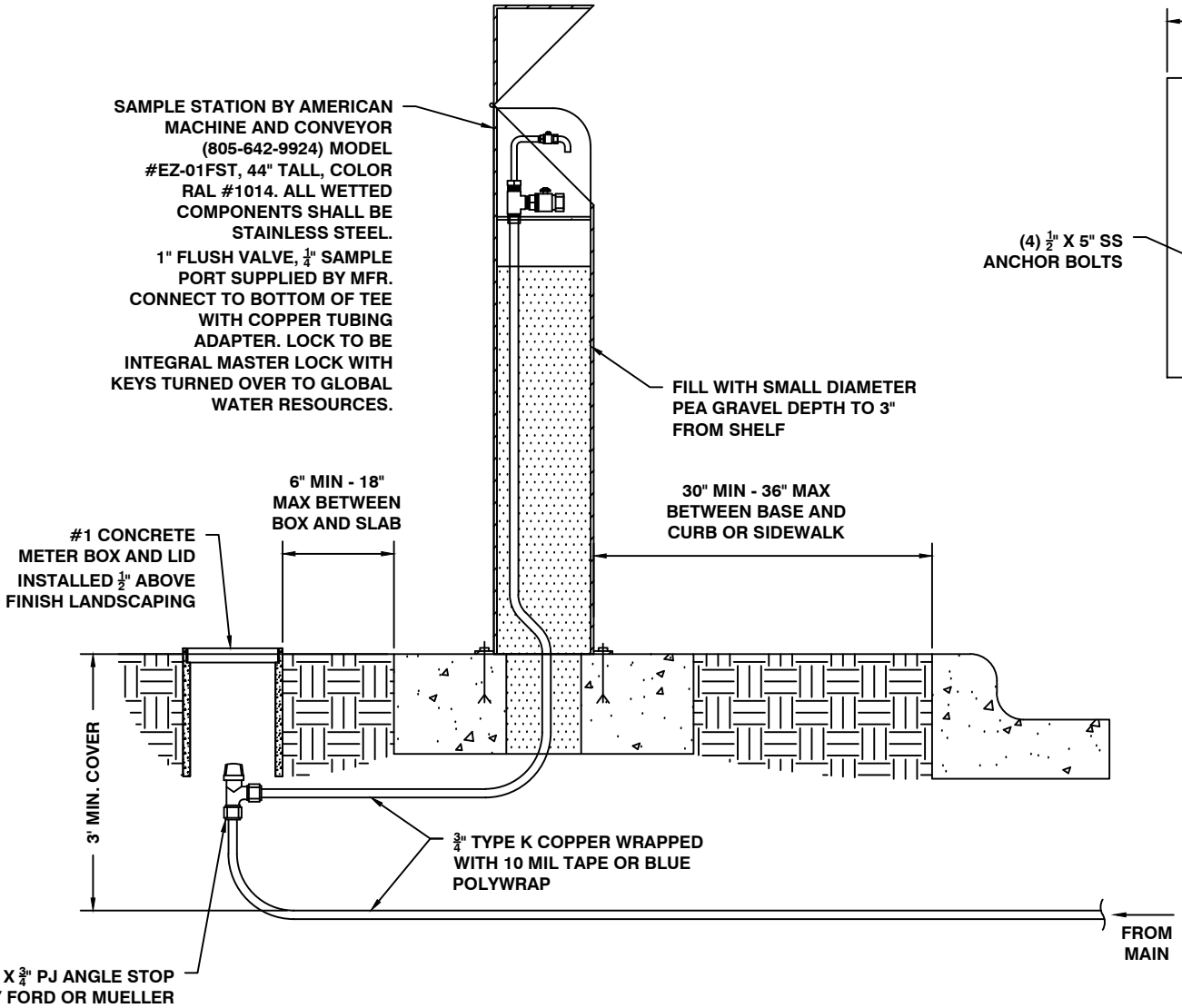

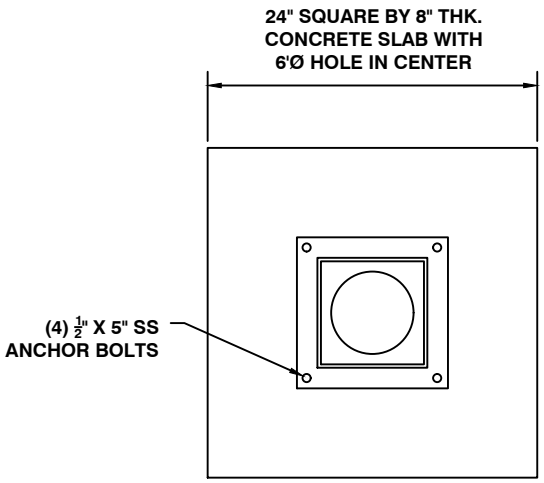

BASE DETAIL
NTS

SAMPLE STATION W/FLUSH VALVE
NTS

03/2017

GWR Global Water Resources

Water Sampling Station

DETAIL NO.
387

Q:\Design Standards\Global Water\Standard Details 2017\387 - Water Sampling Station.dwg

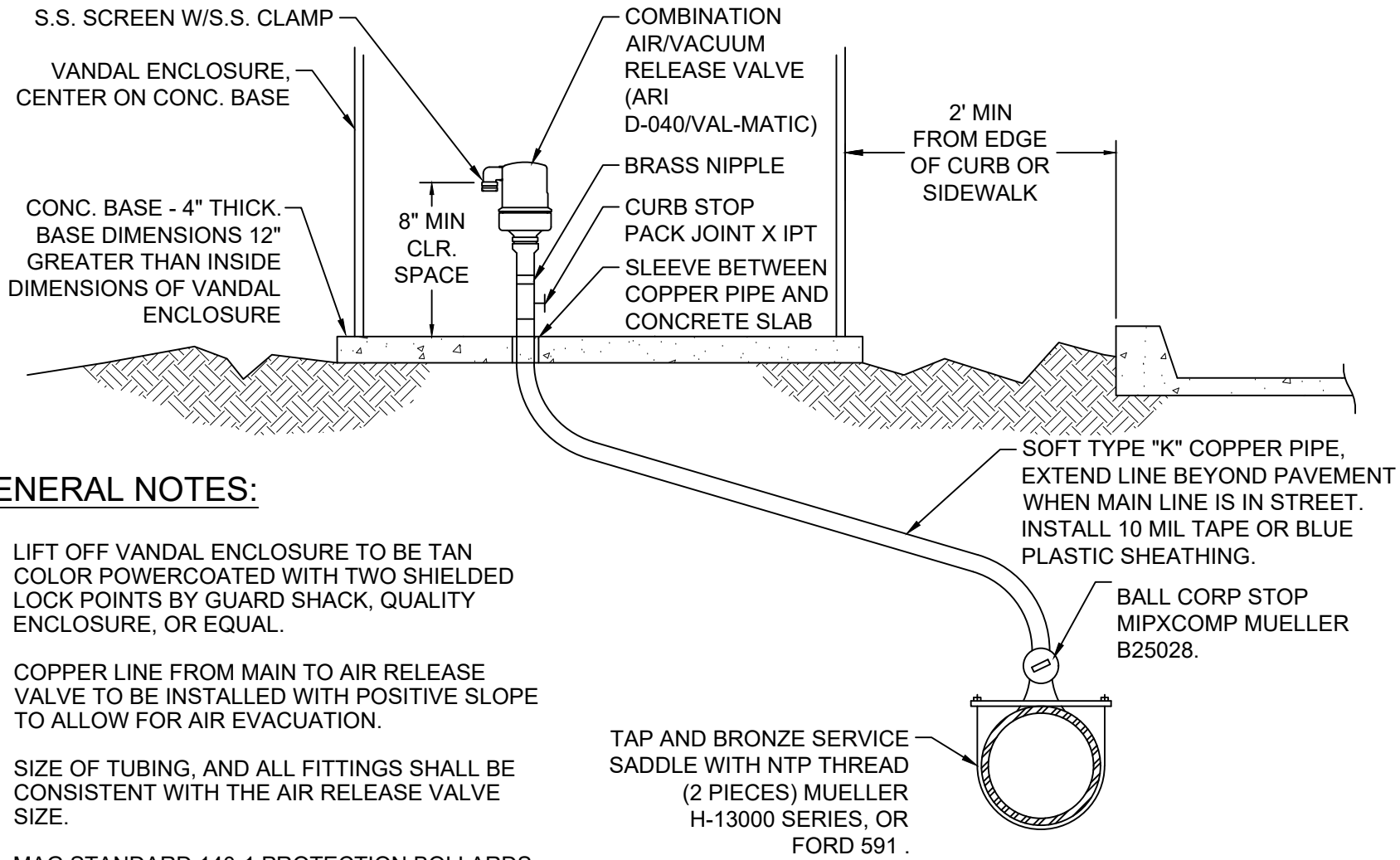

GENERAL NOTES:

1. LIFT OFF VANDAL ENCLOSURE TO BE TAN COLOR POWERCOATED WITH TWO SHIELDED LOCK POINTS BY GUARD SHACK, QUALITY ENCLOSURE, OR EQUAL.
2. COPPER LINE FROM MAIN TO AIR RELEASE VALVE TO BE INSTALLED WITH POSITIVE SLOPE TO ALLOW FOR AIR EVACUATION.
3. SIZE OF TUBING, AND ALL FITTINGS SHALL BE CONSISTENT WITH THE AIR RELEASE VALVE SIZE.
4. MAG STANDARD 140-1 PROTECTION BOLLARDS IN TRAFFIC AREAS.

03/2017

GWR Global Water Resources

Potable Air Release Valve

DETAIL NO.

388-1

Q:\Design Standards\Global Water\Standard Details 2017\388-1 - Potable Air Release Valve.dwg

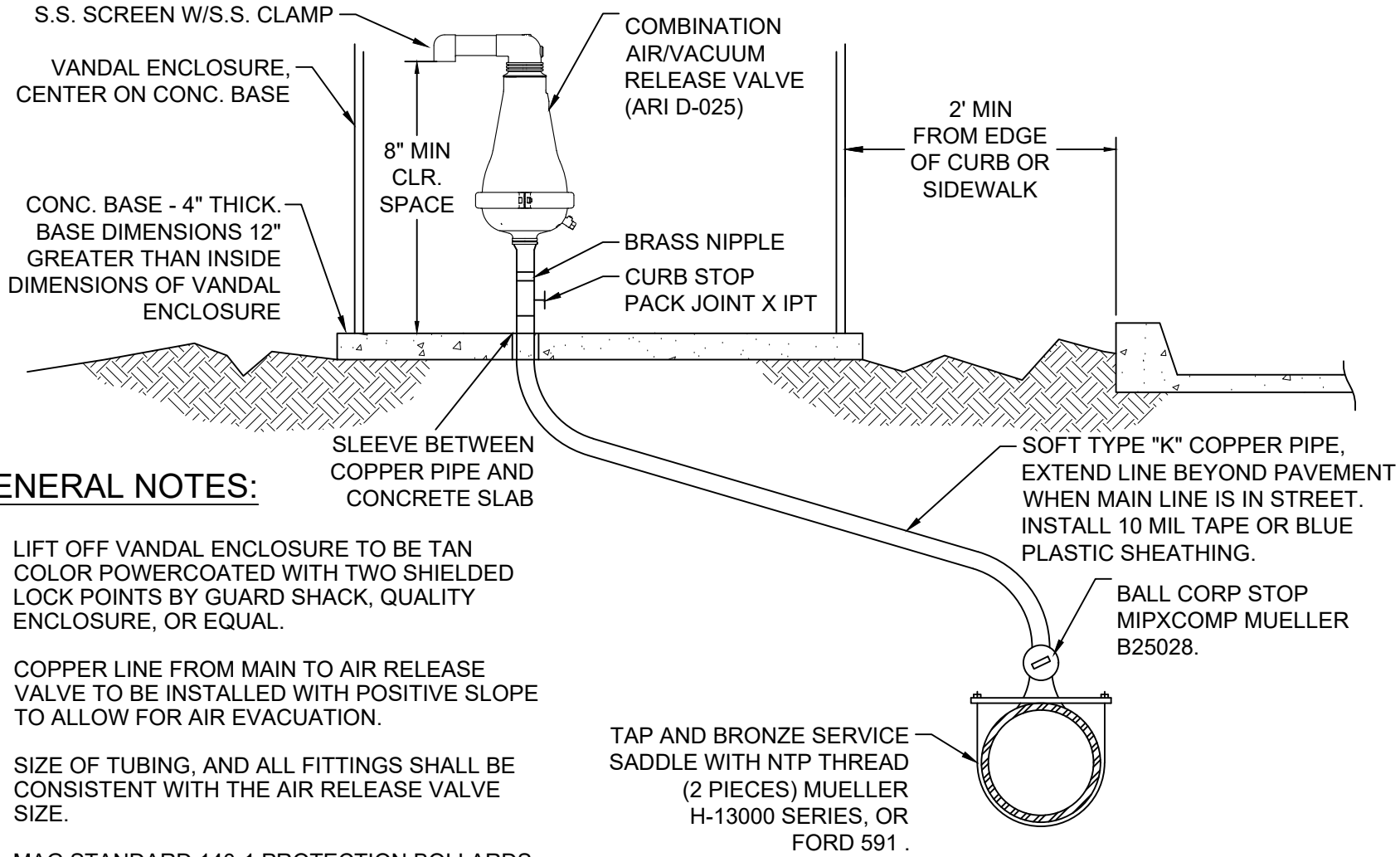

GENERAL NOTES:

1. LIFT OFF VANDAL ENCLOSURE TO BE TAN COLOR POWERCOATED WITH TWO SHIELDED LOCK POINTS BY GUARD SHACK, QUALITY ENCLOSURE, OR EQUAL.
2. COPPER LINE FROM MAIN TO AIR RELEASE VALVE TO BE INSTALLED WITH POSITIVE SLOPE TO ALLOW FOR AIR EVACUATION.
3. SIZE OF TUBING, AND ALL FITTINGS SHALL BE CONSISTENT WITH THE AIR RELEASE VALVE SIZE.
4. MAG STANDARD 140-1 PROTECTION BOLLARDS IN TRAFFIC AREAS.

03/2017

GWR Global Water Resources

Reclaimed Air Release Valve

DETAIL NO.

388-2

Q:\Design Standards\Global Water\Standard Details 2017\388-2 - Reclaimed Air Release Valve.dwg

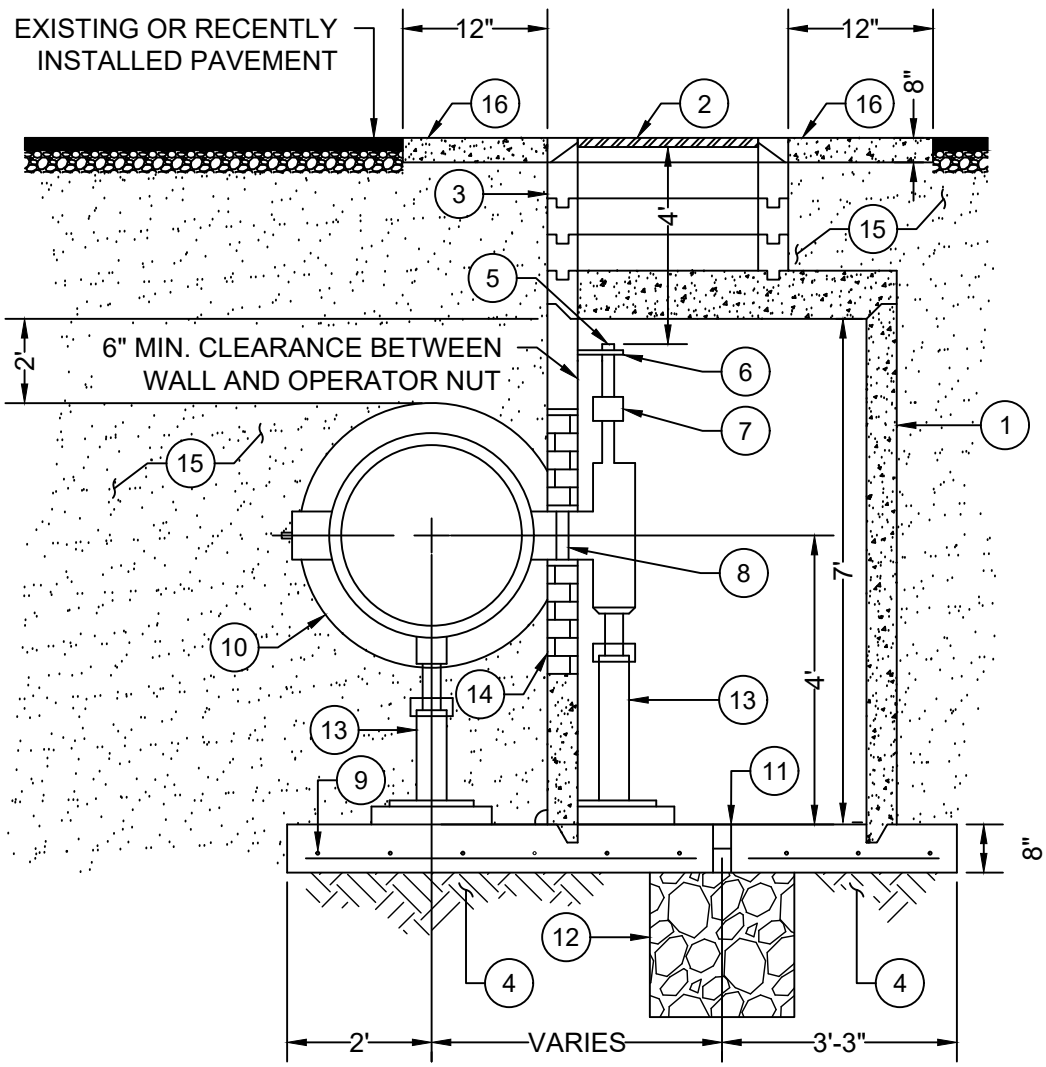

SECTION

LIST OF MATERIALS

1. 48" I.D. MANHOLE SHAFT PER MAG STD. DETAIL 420, TYPE "B" TOP.
2. 32" HINGED MANHOLE FRAME & COVER PER MAG STD. DETAIL 424.
3. GROUTED ADJUSTING RINGS.
4. BEDDING MATERIAL THOROUGHLY COMPACTED PER MAG SEC. 601, OR PER LOCAL AUTHORITY.
5. OPERATOR NUT.
6. WALL BRACKET.
7. PACKING GLAND.
8. 6" EXTENSION.
9. #4 REBAR 12" ON CENTER EACH WAY 2" CLEAR TYPICAL.
10. BUTTERFLY VALVE.
11. 3" DIAMETER DRAIN.
12. 8 CU. FT. GRAVEL SUMP.
13. ADJUSTABLE PIPE SADDLE SUPPORT.
14. RECTANGULAR CUT-OUT IN MANHOLE SHAFT, FILL SPACE BETWEEN SHAFT AND PIPE WITH 1" SHEET FOAM, BRICK AND NON SHRINK MORTAR.
15. NATIVE MATERIAL THOROUGHLY COMPACTED, PER MAG SEC. 601, OR PER LOCAL AUTHORITY.
16. CLASS 'AA' CONCRETE COLLAR ALL AROUND FRAME AS PER MAG SEC. 725, 505

03/2017

GWR Global Water Resources

Butterfly Valve Operator Manhole

DETAIL NO.

391

Q:\Design Standards\Global Water\Standard Details 2017\391 - Butterfly Valve Operator Manhole.dwg

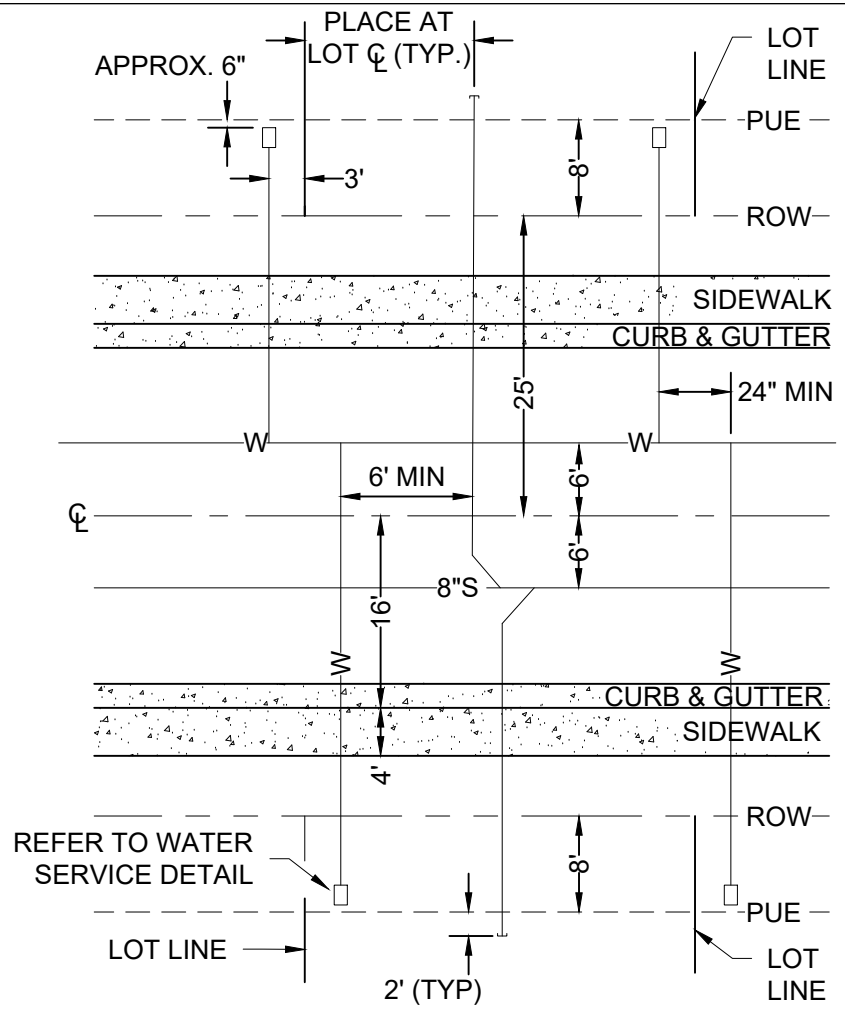

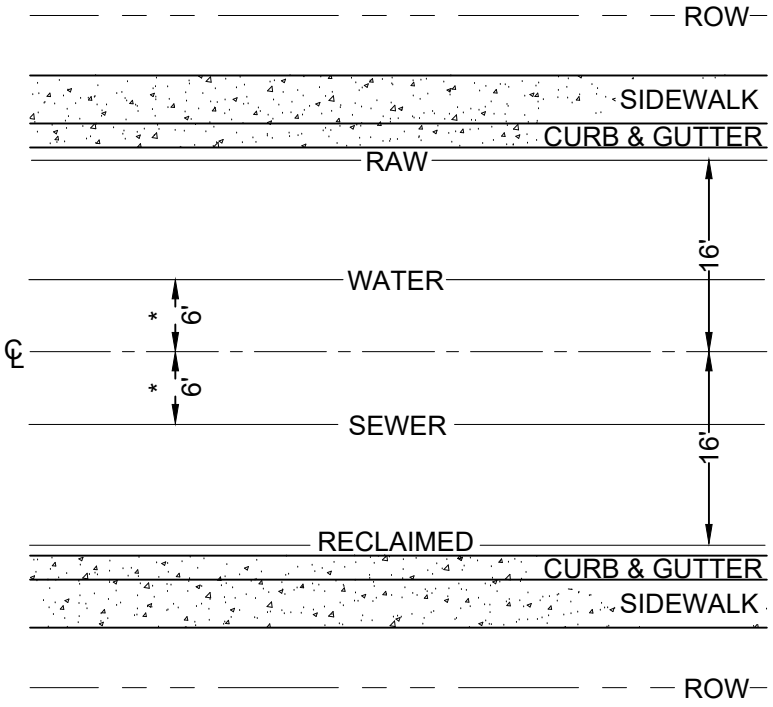

* WHERE CENTER MEDIANS ARE PRESENT; WATER AND SEWER MAINS SHALL BE LOCATED ON THE CENTERLINE OF THE INSIDE LANES.

ARTERIAL STREETS

GENERAL NOTE:

LOCATE WATER MAINS ON THE NORTH & EAST SIDES OF THE STREET, 6 FT FROM THE CENTERLINE. LOCATE SEWERS ON THE SOUTH & WEST SIDES OF THE STREET, 6 FT FROM THE CENTERLINE.

INTERIOR STREETS

03/2017

GWR Global Water Resources

Utility Locations

DETAIL NO.

404

Q:\Design Standards\Global Water\Standard Details 2017\404 – Utility Locations.dwg

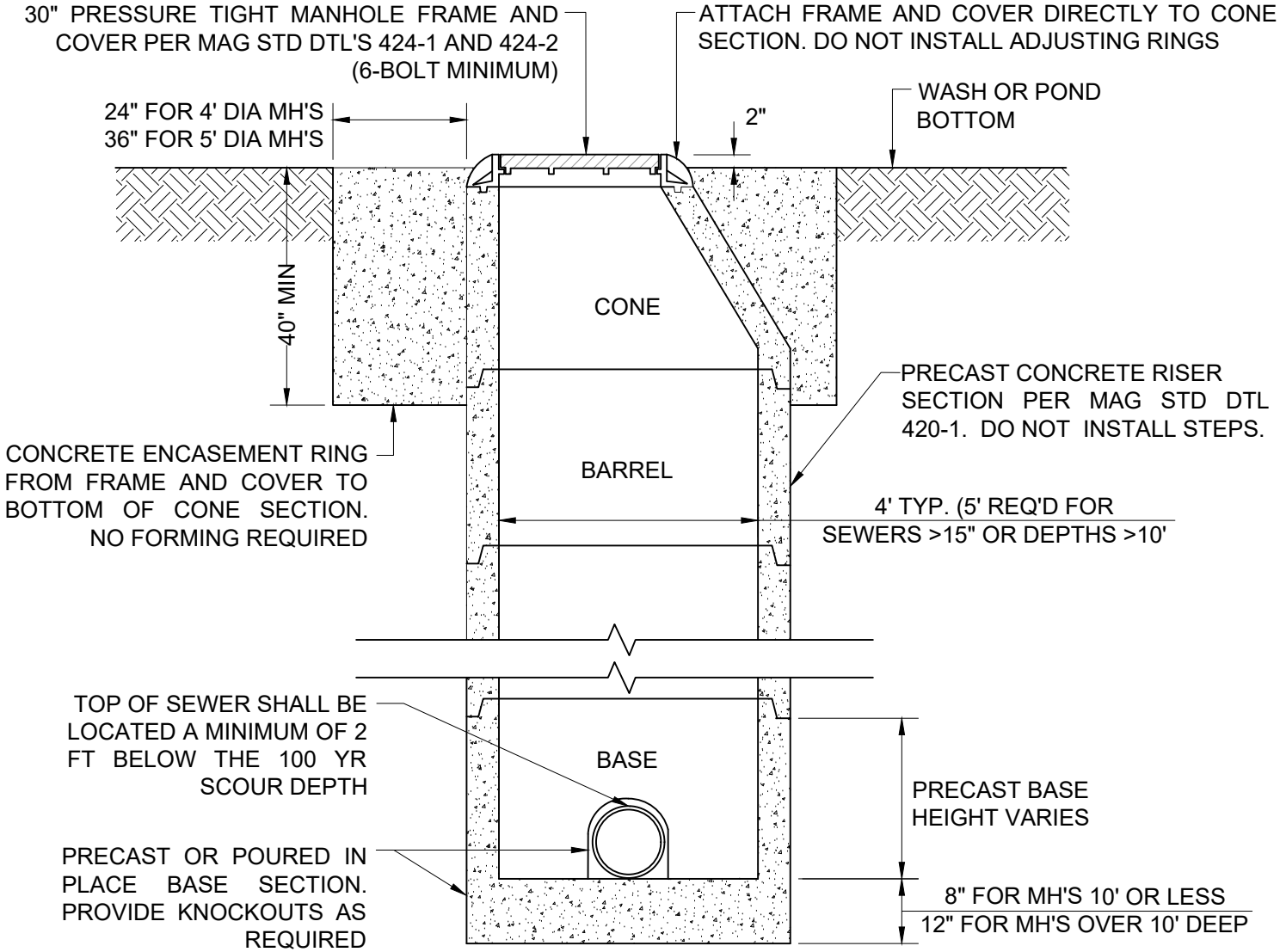

GENERAL NOTE:

COMPACT TO 95% MINIMUM DENSITY PER MAG SPEC. SEC 601

03/2017

GWR Global Water Resources

Water-Tight Manhole

DETAIL NO.

420

Q:\Design Standards\Global Water\Standard Details 2017\420 – Water Tight Manhole.dwg

TYPE 'A' TOP

(PRECAST ECCENTRIC CONICAL TOP MANHOLE)

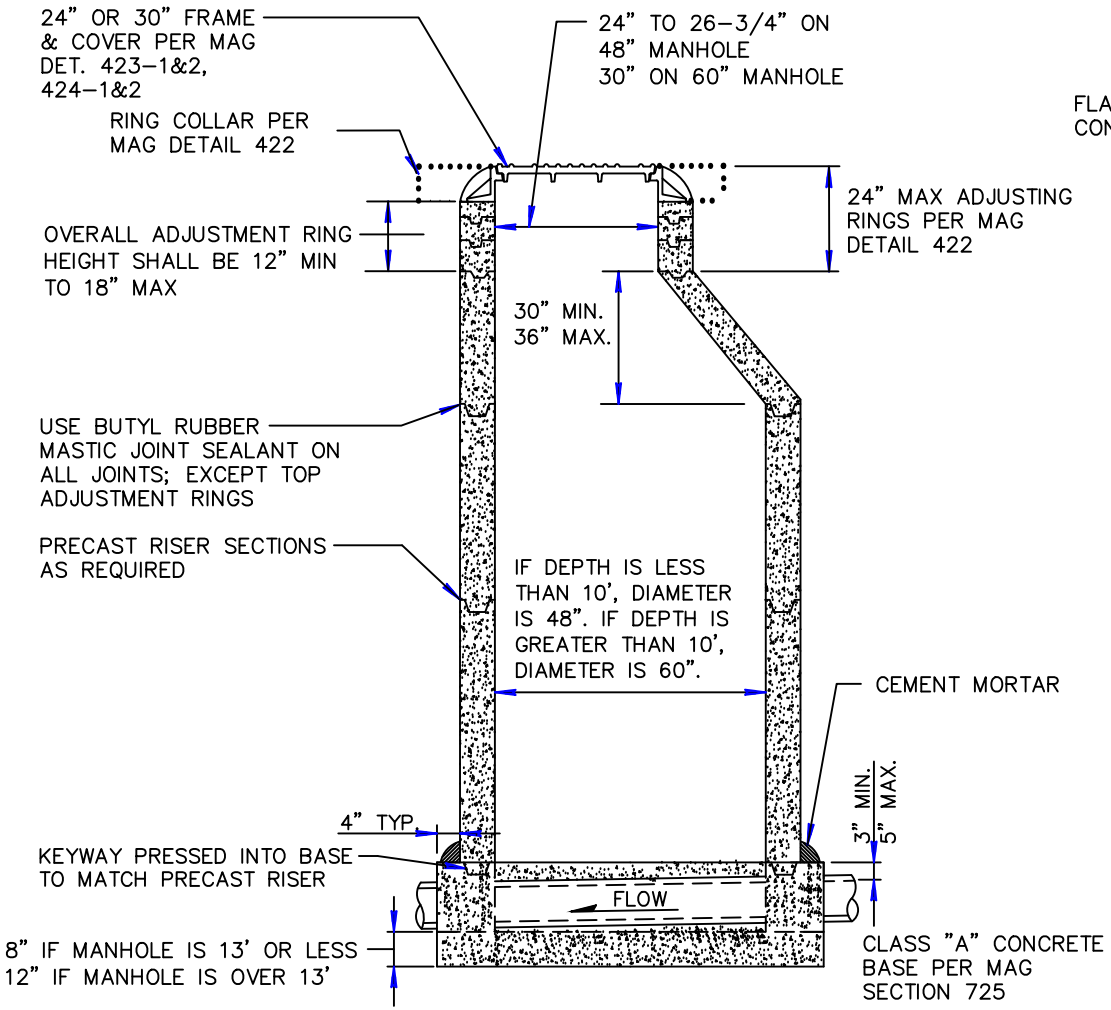

(PRECAST FLAT TOP M.H.)

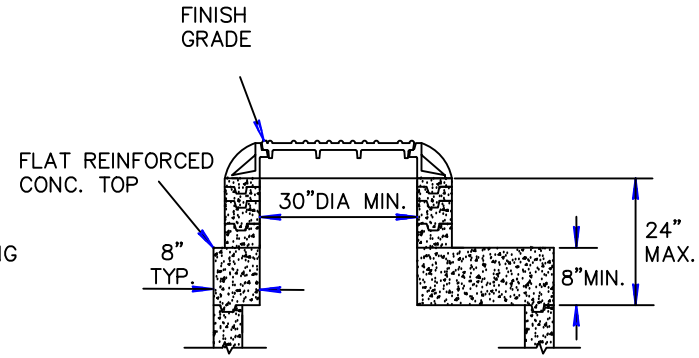

NOTES:

1. PRECAST STEEL REINFORCED MANHOLE SECTIONS SHALL BE MANUFACTURED IN ACCORDANCE WITH ASTM C 478 EXCEPT AS MODIFIED HEREIN. H-20 LOAD RATING REQUIRED.
2. CAST-IN-PLACE MANHOLE BASE TO BE CONSTRUCTED IN ONE PLACEMENT.
3. CAST-IN-PLACE MANHOLE BASE SHELF AND CHANNEL TO RECEIVE SMOOTH TROWEL FINISH.
4. MANHOLE COATINGS PER GWR.
5. SEE MAG DETAIL 422 FOR FINAL ADJUSTMENT TO GRADE.
6. ANY MANHOLE OVER 20' SHALL REQUIRE ENGINEER (STRUCTURAL) CALCS.
7. THE MANHOLE ACCESS POINT SHALL BE ORIENTED IN SUCH A WAY THAT THE OPENING IS DIRECTLY ABOVE THE LOWEST INVERT, OR AS OTHERWISE DIRECTED BY THE PLANS OR ENG.
8. FOR PRECAST BASE SEE MAG DETAIL 420-2.
9. FLAT TOPS SHALL ONLY BE USED WITH APPROVAL FROM GWR.

03/2017

GWR Global Water Resources

Pre-Cast Concrete Sewer Manhole

DETAIL NO.

421

Q:\Design Standards\Global Water\Standard Details 2017\421 - Pre-cast Concrete Sewer Manhole.dwg

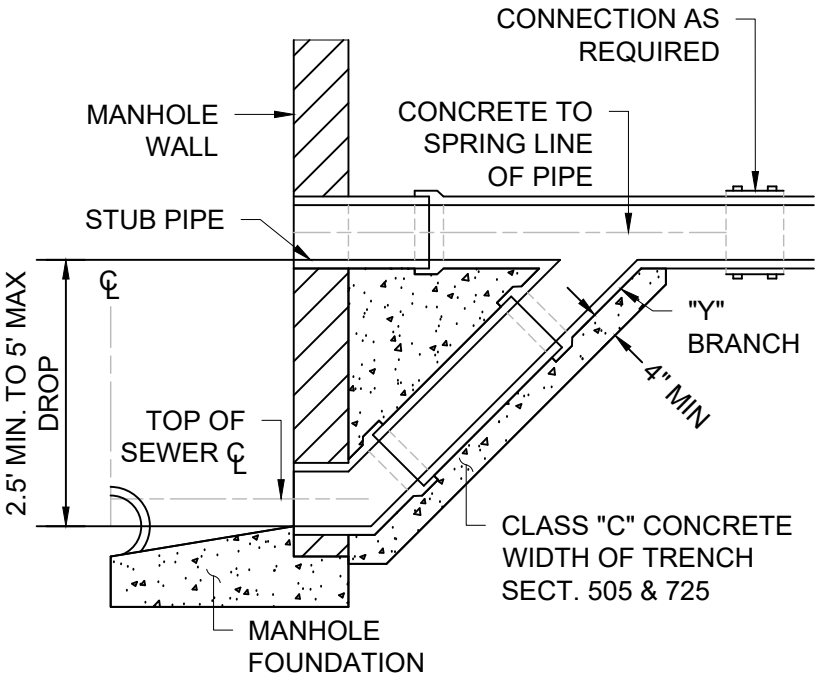

TYPE A

2.5' TO 5' DROP

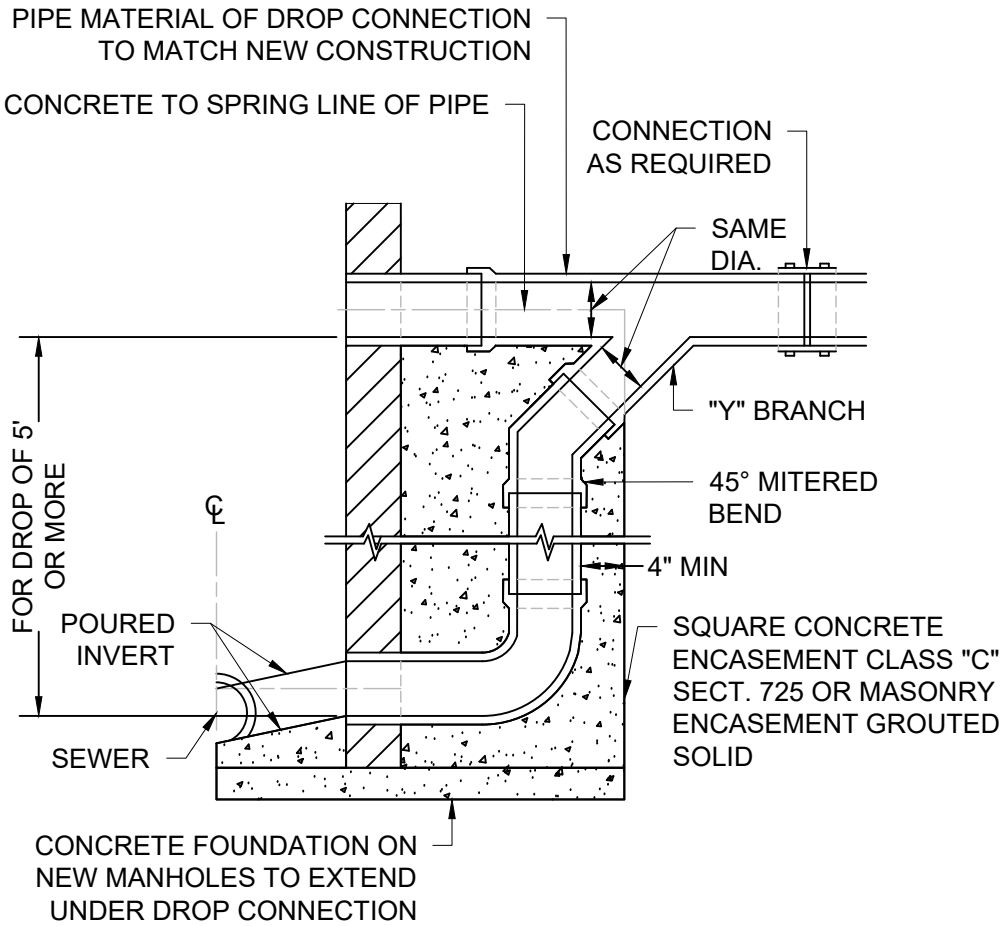

TYPE B

5' OR MORE

03/2017

GWR Global Water Resources

Drop Sewer Connections

DETAIL NO.

426

Q:\Design Standards\Global Water\Standard Details 2017\426 - Drop Sewer Connection.dwg

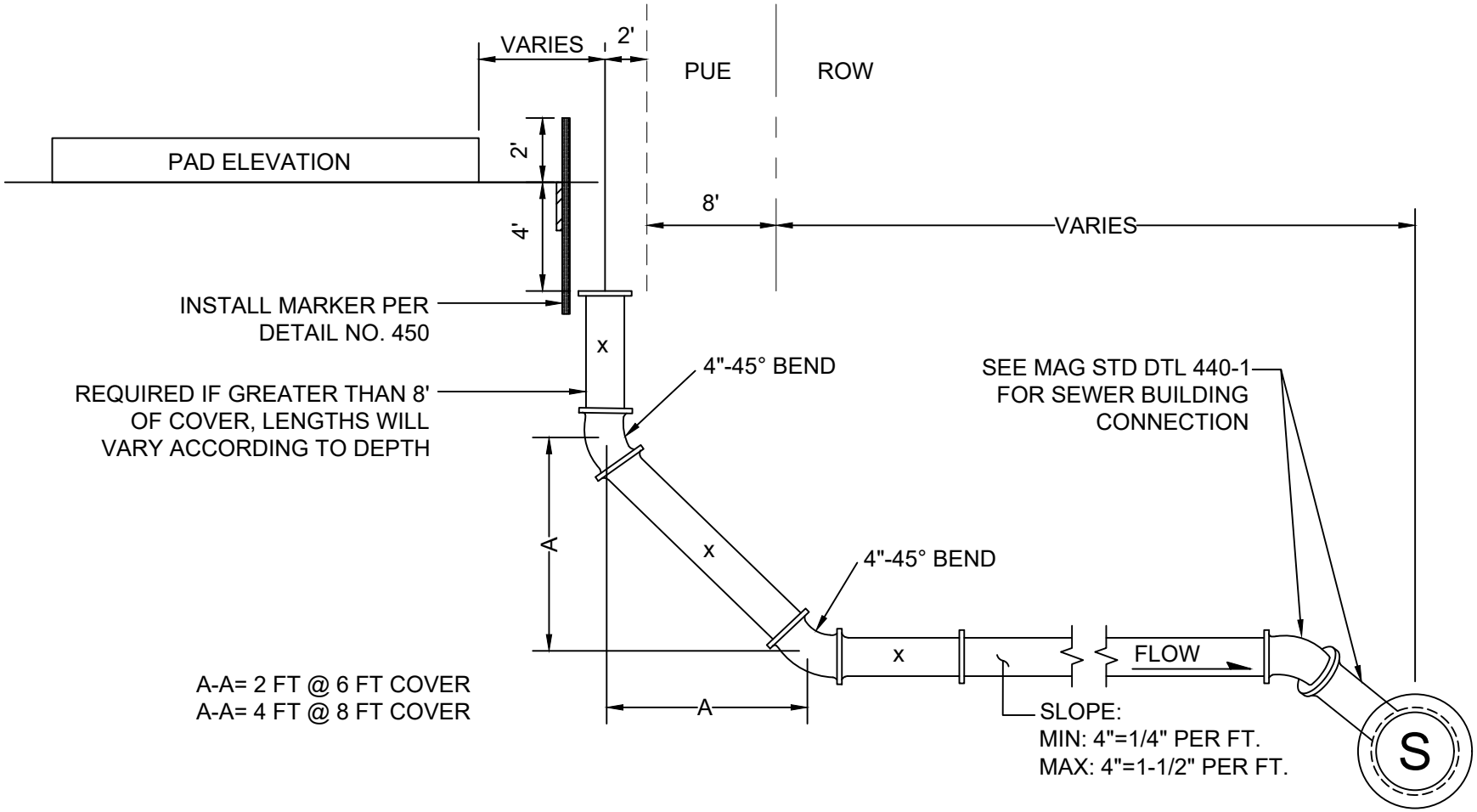

GENERAL NOTES:

1. "x" PIPE LENGTHS VARY PER INDIVIDUAL LOT.
2. SEE GLOBAL WATER RESOURCES STANDARD DETAIL 450 MARKER POST FOR SEWER STUBS.

03/2017

GWR Global Water Resources

Sewer Lateral Connection

DETAIL NO.

440

Q:\Design Standards\Global Water\Standard Details 2017\440 - Sewer Lateral Connection.dwg

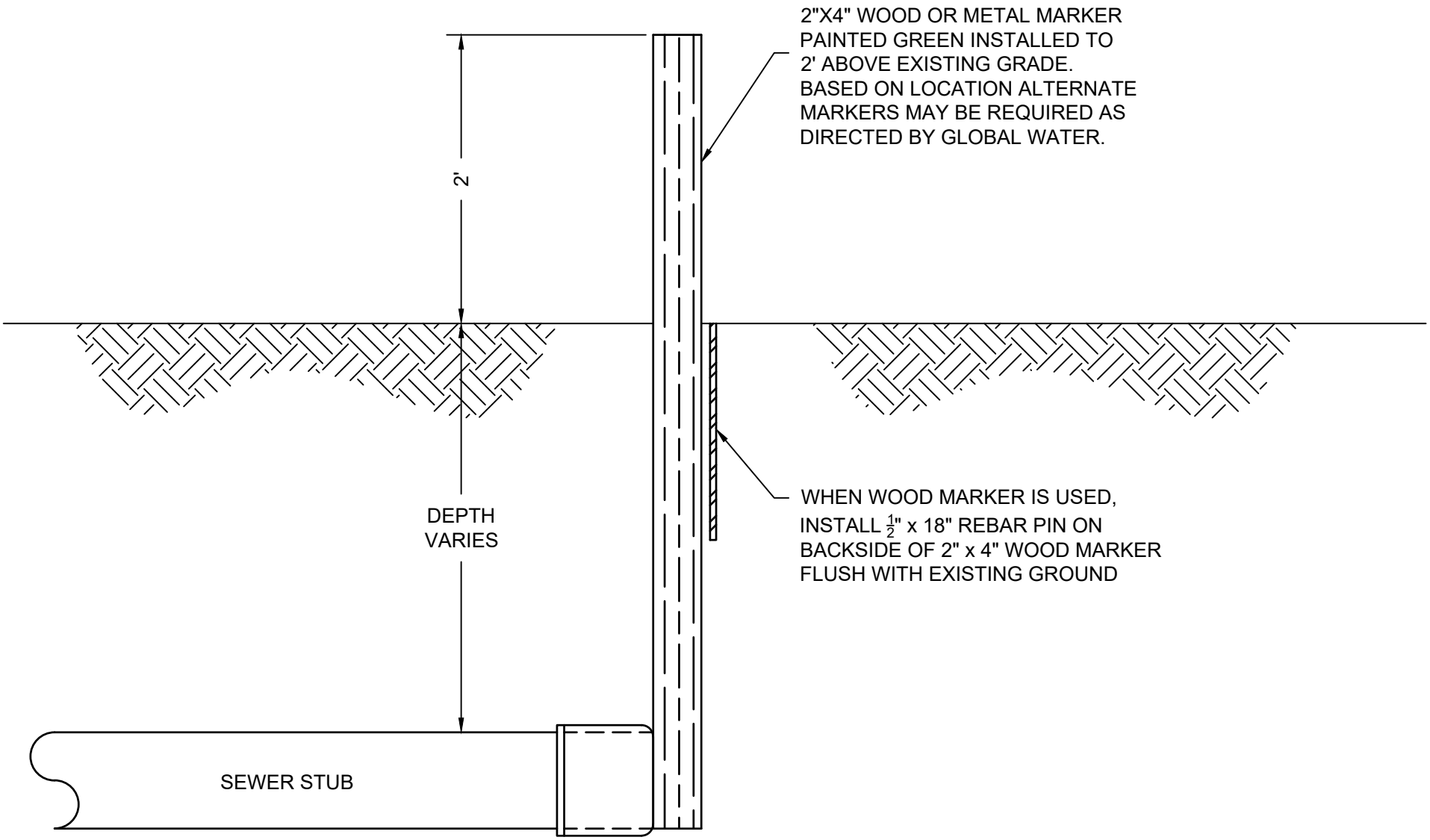

03/2017

GWR Global Water Resources

Marker Post for Sewer Stubs

DETAIL NO.

450

Q:\Design Standards\Global Water\Standard Details 2017\450 - Marker Post for Sewer Stubs.dwg

APPENDIX J
SMALL WIRELESS FACILITY DETAILS

NOTES

1. SEE GENERAL NOTES ON CITY OF MARICOPA STANDARD DETAIL MAR-700.
2. STREET LIGHT CONSTRUCTION AND POLE REPLACEMENT SHALL MATCH BUILD TYPE OF EXISTING STREET LIGHT POLES.

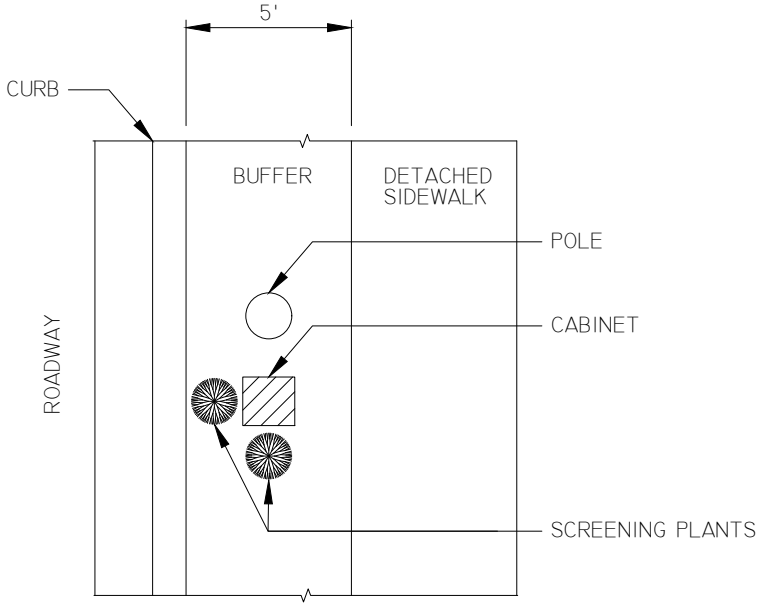

PLAN VIEW
NTS

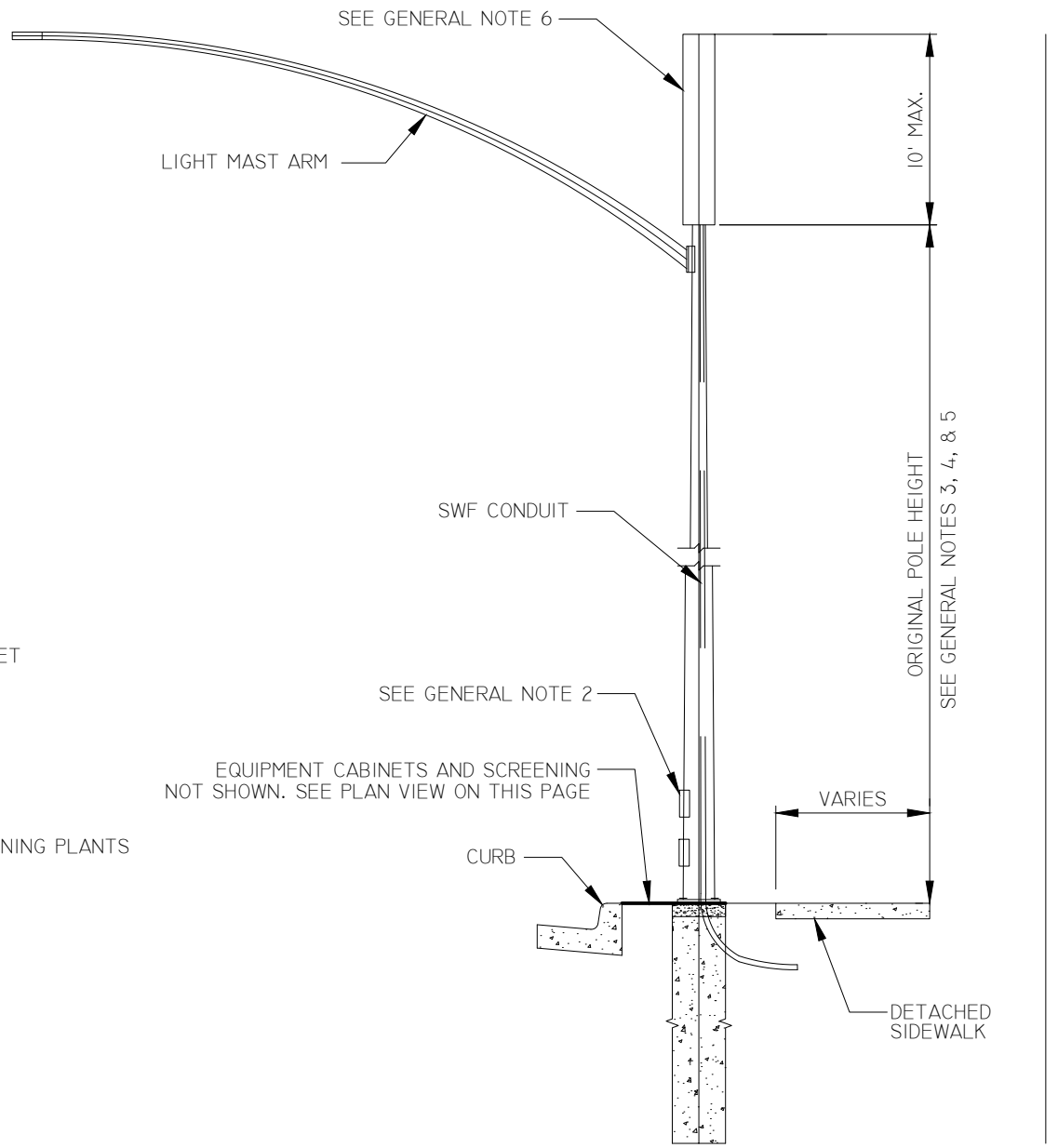

SMALL WIRELESS FACILITIES
STREETLIGHT POLE ATTACHMENT
NTS

DETAIL NO.			REVISED	DETAIL NO.
MAR-701	CITY OF MARICOPA Proud History · Promising Future	SMALL WIRELESS FACILITIES ON STREETLIGHTS	01-01-2020	MAR-701

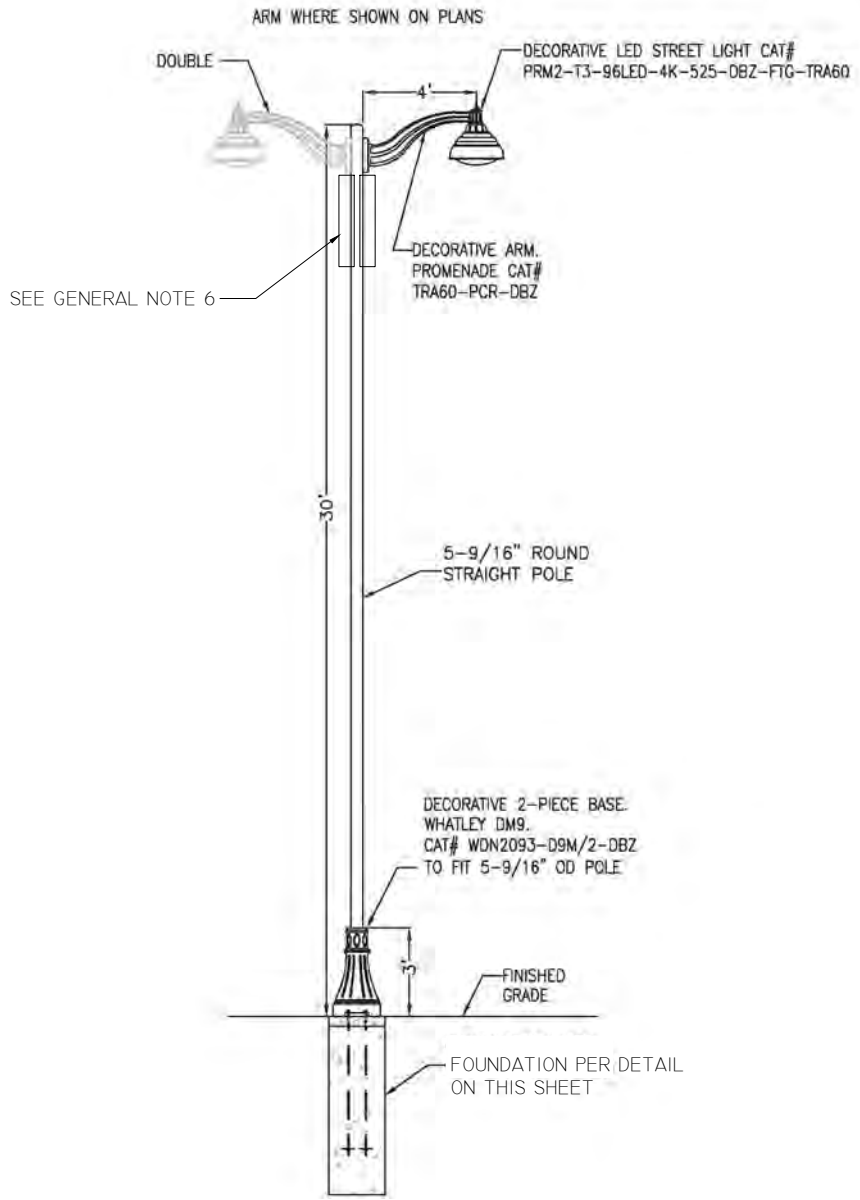

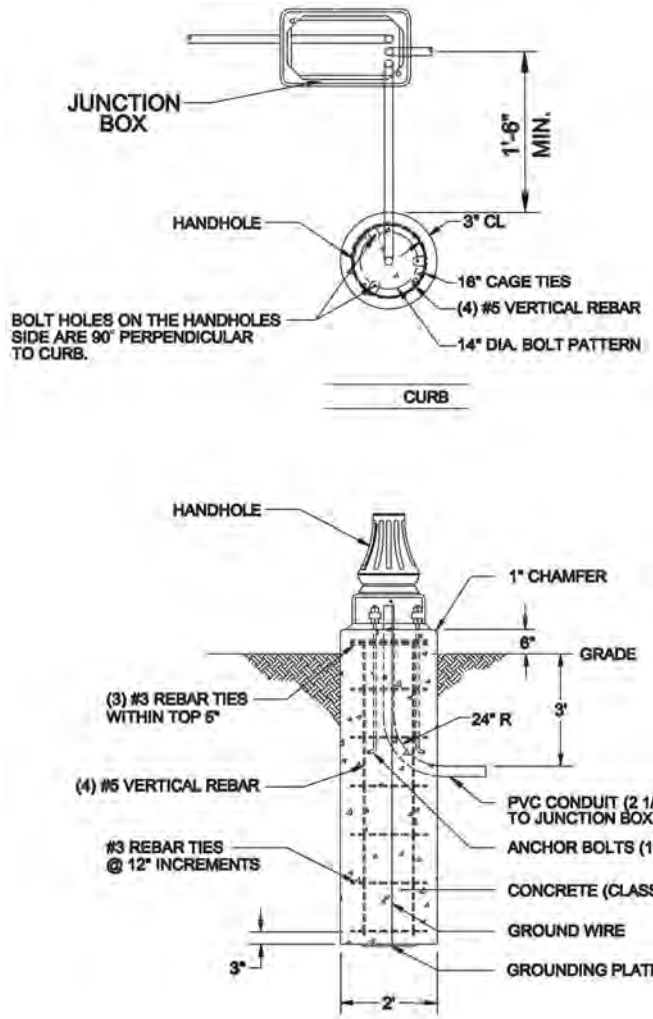

DETAIL - FOUNDATION

NTS

DETAIL NO.			REVISED	DETAIL NO.
MAR-702	CITY OF MARICOPA Proud History · Promising Future	SMALL WIRELESS FACILITIES DECORATIVE STREETLIGHT	01-01-2020	MAR-702

NOTES

1. SEE GENERAL NOTES ON CITY OF MARICOPA STANDARD DETAIL MAR-700.
2. TRAFFIC SIGNAL CONSTRUCTION AND POLE REPLACEMENT SHALL MATCH BUILD TYPE OF EXISTING TRAFFIC SIGNAL POLES.
3. THE TOP OF THE FOUNDATION SHALL MATCH ELEVATION OF BACK OF SIDEWALK OR BACK OF CURB IF NO SIDEWALK IS PRESENT.
4. POLES LOCATED WITHIN TWENTY (20) FEET OF OVERHEAD ELECTRIC UTILITY WILL NOT BE ALLOWED.

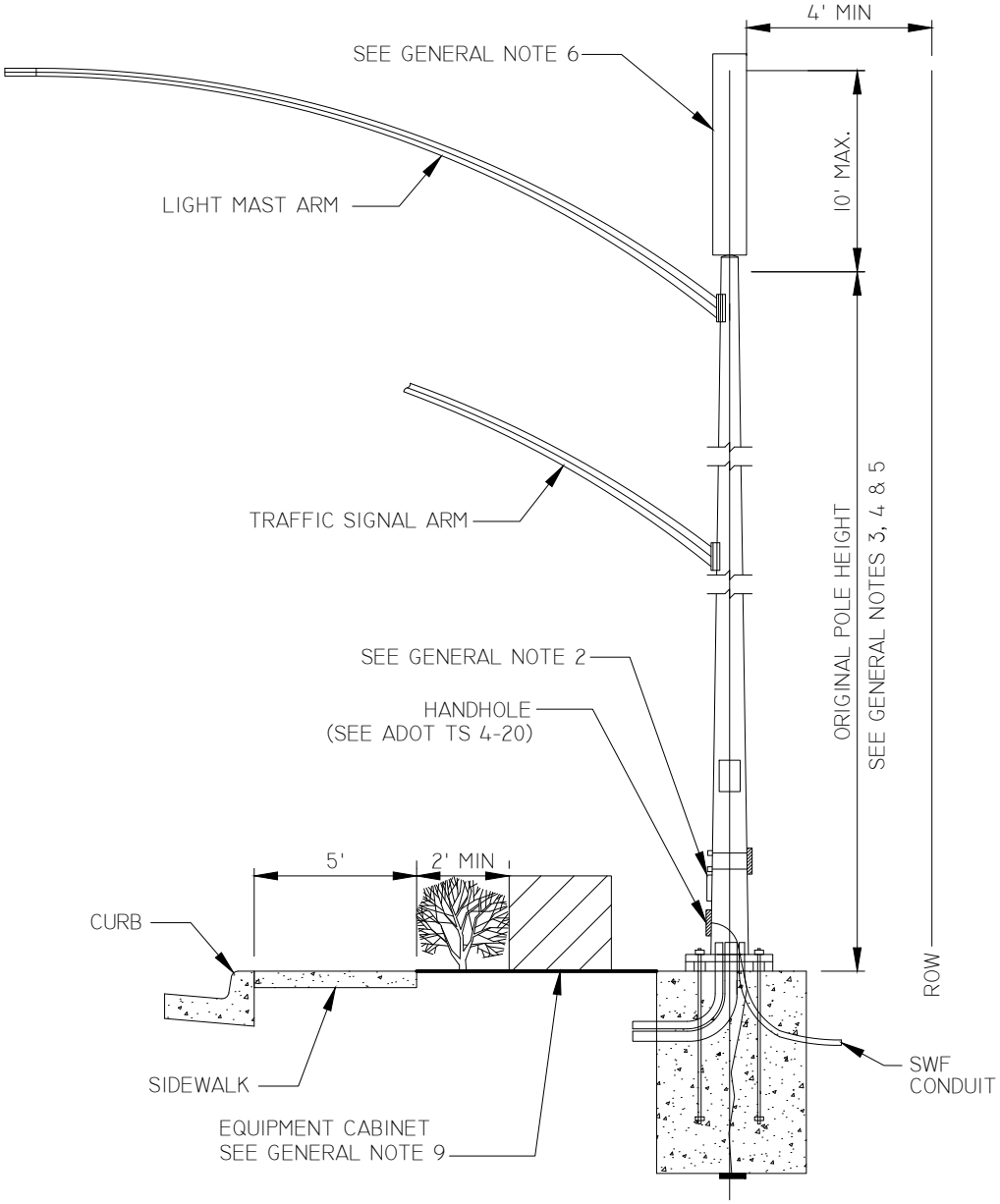

SMALL WIRELESS FACILITIES
TRAFFIC SIGNAL POLE ATTACHMENT
NTS

DETAIL NO.			REVISED	DETAIL NO.
MAR-703	CITY OF MARICOPA Proud History · Promising Future	SMALL WIRELESS FACILITIES ON TRAFFIC SIGNALS	01-01-2020	MAR-703

NOTES

1. SEE GENERAL NOTES ON CITY OF MARICOPA STANDARD DETAIL MAR-700.
2. ALL REPLACEMENT ITS MONO-POLES SHALL ALSO INCLUDE ANY CAMERAS, PHOTO-CELL OR SENSORS AS REQUIRED.

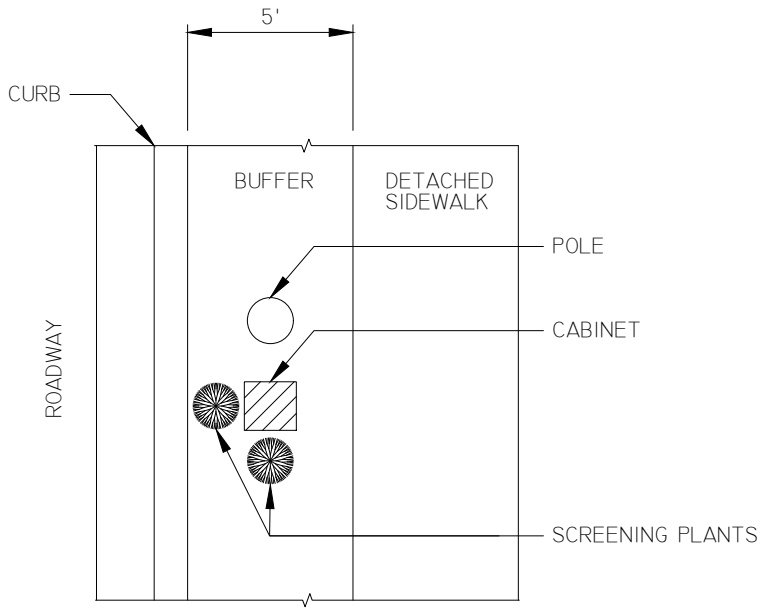

PLAN VIEW
NTS

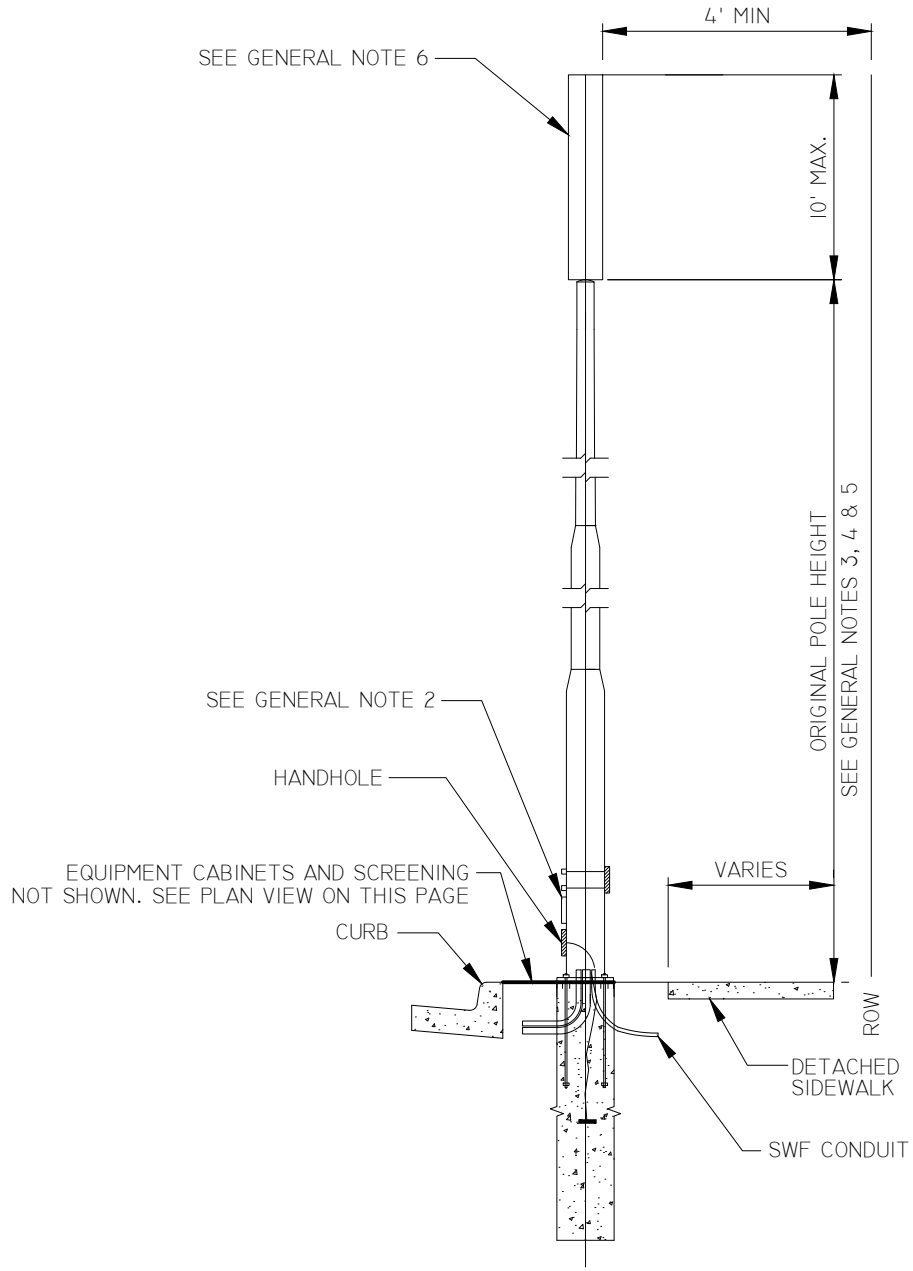

SMALL WIRELESS FACILITIES CITY MONO-POLE ATTACHMENT
NTS

DETAIL NO.			REVISED	DETAIL NO.
MAR-704	CITY OF MARICOPA Proud History · Promising Future	SMALL WIRELESS FACILITIES ON CITY MONO-POLES	01-01-2020	MAR-704

NOTES

1. SEE GENERAL NOTES ON CITY OF MARICOPA STANDARD DETAIL MAR-700.
2. THE MONOPOLE SHALL BE A SELF-SUPPORTING FREE STANDING STRUCTURE. THE DIAMETER OF THE MONOPOLE AND SWF SHALL BE A MAXIMUM OF 40 INCHES.
3. THE MONOPOLE SHALL NOT EXTEND ABOVE THE HEIGHT OF THE TALLEST EXISTING POLE WITHIN 500 FEET BY MORE THAN TEN (10) FEET AT A MAXIMUM OF 50 FEET.
4. MONOPOLE SHALL BE LOCATED PER THE CITY OF MARICOPA ZONING ORDINANCE, DESIGN STANDARDS MANUAL, OR FCC REQUIREMENTS, WHICH EVER IS MOST STRINGENT.
5. ALL MONOPOLES TO BE CONCEALED AS PLANT OF SIMILAR HEIGHT SELECTED FROM THE ACCEPTABLE PLANT LIST IN THE CITY OF MARICOPA LANDSCAPE & IRRIGATION STANDARDS OR AS LIGHT POLE OF SIMILAR HEIGHT.

FREESTANDING STEALTH TREE

6. FAUX TREES MUST BE DESIGNED WITH A MINIMUM OF 3.5 BRANCHES PER FOOT FOR FULL DENSITY COVERAGE WITH LIMITED SPACING BETWEEN THE BRANCHES. SEVENTY PERCENT OF THE BRANCHES SHALL BE 8-FOOT OR LONGER.
7. BRANCHES SHALL EXTEND BEYOND THE LENGTH OF THE ANTENNA BY A MINIMUM OF 24-INCHES. TREES SHALL BE DESIGNED TO MIMIC THE NATURAL APPEARANCE OF THEIR SPECIES. THERE SHALL BE NO GAPS IN BRANCH COVERAGE. NO EXPOSED MOUNTING APPARATUS MAY REMAIN WITHOUT THE ASSOCIATED ANTENNAE.

SOLAR STREETLIGHT

8. MONOPOLE STREETLIGHT FIXTURE TO BE SOLAR POWERED AND MAINTAINED BY LICENSEE.
9. MONOPOLE STREETLIGHT TO MEET THE REQUIREMENTS OF CITY OF MARICOPA STANDARDS.
10. STREETLIGHT FOUNDATION TO MEET THE REQUIREMENTS OF CITY OF MARICOPA STANDARDS.
11. STREETLIGHT MAST ARM TO MEET THE REQUIREMENTS OF CITY OF MARICOPA STANDARDS.

ALTERNATIVE DESIGN

12. THE LICENSEE MAY SUBMIT AN ALTERNATIVE DESIGN TO CONCEAL SMALL WIRELESS FACILITY FOR APPROVAL BY THE CITY OF MARICOPA.

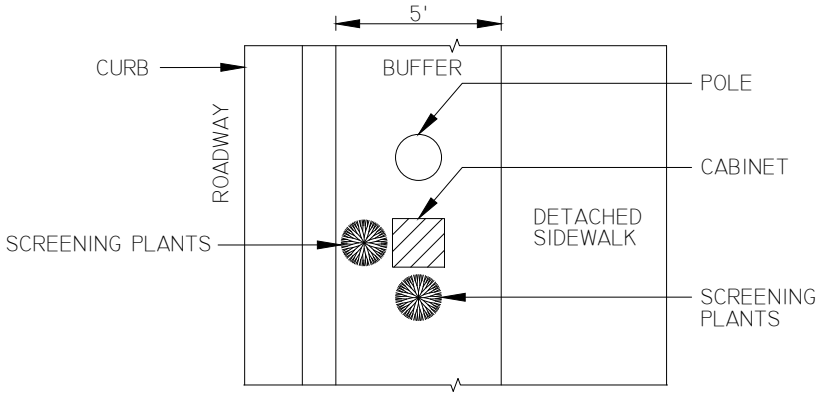

PLAN VIEW

NTS

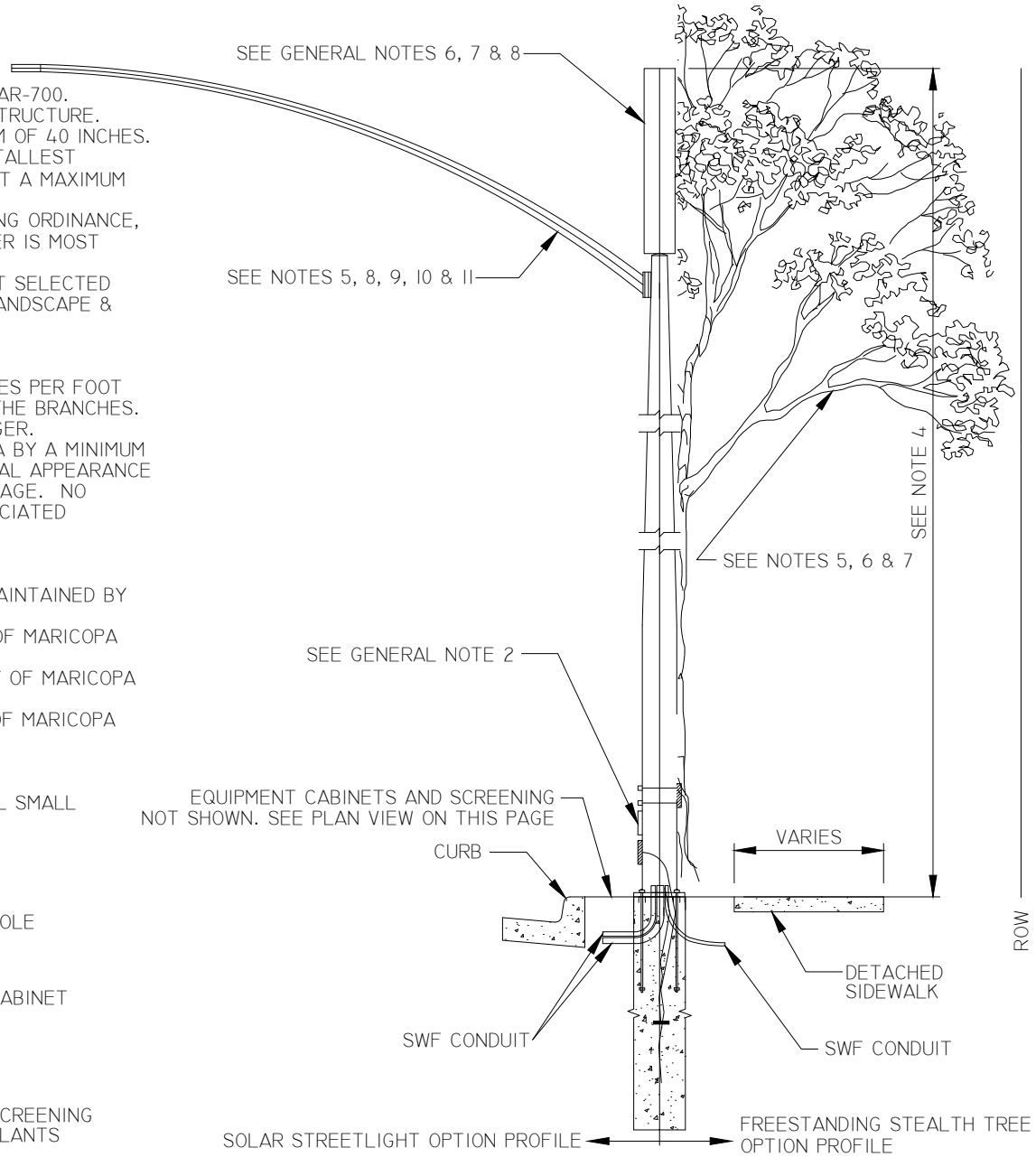

SMALL WIRELESS FACILITIES PRIVATE MONO-POLE

NTS

DETAIL NO.			REVISED	DETAIL NO.
MAR-705	CITY OF MARICOPA — Proud History · Promising Future	SMALL WIRELESS FACILITIES ON PRIVATE MONO-POLES	01-01-2020	MAR-705

NOTES

1. SEE GENERAL NOTES ON CITY OF MARICOPA STANDARD DETAIL MAR-700.
2. THE MONOPOLE SHALL BE A SELF-SUPPORTING FREE STANDING STRUCTURE. THE DIAMETER OF THE MONOPOLE AND SWF SHALL BE A MAXIMUM OF 40 INCHES.
3. THE MONOPOLE SHALL NOT EXTEND ABOVE THE HEIGHT OF THE TALLEST EXISTING POLE WITHIN 500 FEET BY MORE THAN TEN (10) FEET AT A MAXIMUM OF 50 FEET.
4. MONOPOLE SHALL BE LOCATED PER THE CITY OF MARICOPA ZONING ORDINANCE, DESIGN STANDARDS MANUAL, OR FCC REQUIREMENTS, WHICH EVER IS MOST STRINGENT.
5. ALL MONOPOLES TO BE CONCEALED AS PLANT OF SIMILAR HEIGHT SELECTED FROM THE ACCEPTABLE PLANT LIST IN THE CITY OF MARICOPA LANDSCAPE & IRRIGATION STANDARDS OR AS LIGHT POLE OF SIMILAR HEIGHT.
6. BRANCHES SHALL EXTEND BEYOND THE LENGTH OF THE ANTENNA BY A MINIMUM OF 24-INCHES. TREES SHALL BE DESIGNED TO MIMIC THE NATURAL APPEARANCE OF THEIR SPECIES. THERE SHALL BE NO GAPS IN BRANCH COVERAGE. NO EXPOSED MOUNTING APPARATUS MAY REMAIN WITHOUT THE ASSOCIATED ANTENNAE.

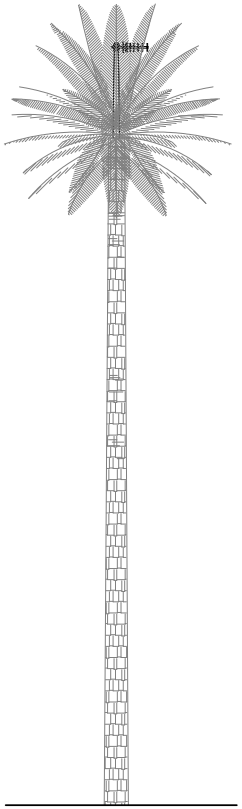

DETAIL - MONOPALM AND ANTENNA

NTS

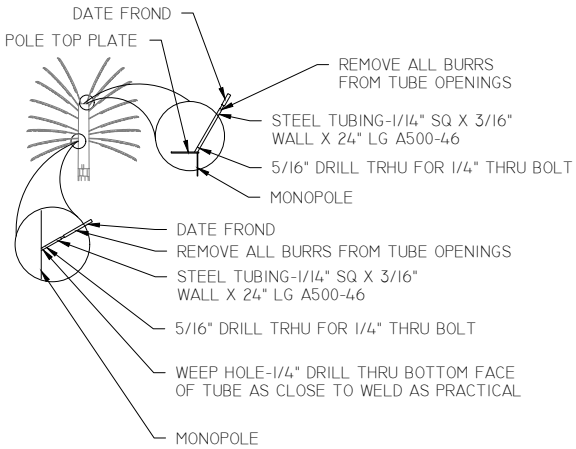

DETAIL - SLEEVE ATTACHMENT (SIDE OF POLE)

NTS

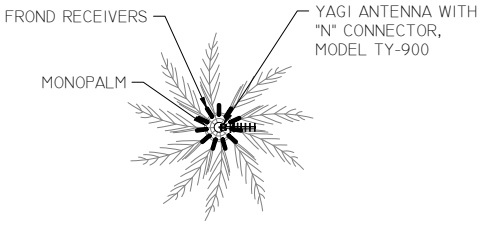

DETAIL - ANTENNA LAYOUT

NTS

DETAIL NO.			REVISED	DETAIL NO.
MAR-706	CITY OF MARICOPA — Proud History · Promising Future	SMALL WIRELESS FACILITIES STEALTH TREE DESIGN	01-01-2020	MAR-706

APPENDIX K
MS4 REQUIREMENTS

STORMWATER QUALITY

Projects shall conform to requirements of the City of Maricopa and applicable Arizona Pollutant Discharge Elimination System (AZPDES) Permits. Refer to Arizona Department of Environmental Quality (ADEQ) for requirements.

FLOODPLAIN MANAGEMENT

Stormwater plans for subdivisions which are located in whole or in part within a Federal Emergency Management Authority (FEMA) 100-year flood zone shall be submitted to the Flood Control District of Maricopa County (FCDMC) and approved by FCDMC prior to approval by the City. FCDMC requires building final floor elevations to be a minimum of 12-inches above the 100-year flood level. In no case shall any finished floor elevation be less than 14 inches above the flood plain low outfall elevation.

STREET DRAINAGE

Any runoff collected along median curb from the 10-year design storm shall be intercepted before spilling across roadway lanes.

CONVEYANCE FACILITIES

Open channels are discouraged and require City Engineer approval. They may be considered if the depth of flow is less than three feet and the flow velocity is less than 2.5 feet per second. They shall have significant landscaping with side slopes 4:1 or flatter.

STORAGE FACILITIES

The rainfall from a 100-year frequency, 2-hour duration storm that falls on a parcel, including adjacent half-streets shall be intercepted and stored within that parcel and outside of the City right-of-way. Storage facilities shall be sized to retain 100% of the design volume.

Non-stormwater discharges. Except as set forth herein, no person shall cause or allow any solid, liquid or gaseous substance, except for runoff, surface flows and drainage that is comprised solely of stormwater, to be placed on or discharged, either directly or indirectly, to any highway, alley, public place, right-of-way or stormwater collection system within the City, or to any other property owned by the City. The prohibitions set forth in this Section 45-8 include, without limitation, the discharge of swimming pool or spa waters or pollutants that may either come in contact with stormwater or obstruct the intended flow of stormwater to a stormwater collection system. Fugitive dust and sediment generated from construction activities through erosion, wind and vehicle trackout also have the potential to combine with stormwater to create non-stormwater discharges. Implementation of dust control measures that minimize fugitive dust and sediment generated from construction activities will reduce the amount of sediment deposited into stormwater collection systems.

Exceptions. Unless the quantity or scope of such discharge constitutes a nuisance, the following non-stormwater discharges are permissible:

A. Discharges from fire hydrant flushing conducted or approved by the City;

B. Run-off from firefighting activity conducted by the City;

C. Discharges of potable water, including uncontaminated groundwater, or from reclaimed water line flushing conducted or approved by the City;

D. Discharges comprised of air conditioner condensate;

E. Discharges from watering for dust control purposes during construction activity pursuant to an approved dust control plan, unless significant materials or sediment enters City right-of-way or a stormwater collection system;

F. Discharges from non-commercial car washes where only vehicle exteriors are washed with water and biodegradable soaps, unless significant materials or sediment enters City right-of-way or a stormwater collection system;

G. Discharges from external building wash down where biodegradable soaps are used, unless significant materials or sediment enters City right-of-way or a stormwater collection system;

H. Discharges from washing pavement not associated with construction activity where biodegradable soaps are used and any hazardous or toxic materials have been removed, unless significant materials or sediment enters City right-of-way or a stormwater collection system;

I. Discharges from washing pavement or other surfaces associated with construction activity pursuant to an applicable permit where best management practices are utilized to prevent significant materials or sediment from entering City right-of-way or a stormwater collection system;

J. Incidental and non-recurring discharges of irrigation water or discharges associated with landscape irrigation, unless significant materials or sediment enters City right-of-way or a stormwater collection system;

K. Other, similar, discharges expressly approved in writing by the Director of the Public Works and Utilities Department or designee;

Construction Site Stormwater Runoff Control

- All persons who are required to operate pursuant to a NPDES or AZPDES permit for construction activity (generally those persons engaged in construction activities that will disturb more than one acre (43,560 square feet) of land or less than one acre if part of a larger common plan of development) shall, prior to receiving a grading permit, provide a copy of an NOI (including authorization number) processed by the EPA or ADEQ for that construction activity, to the City of Maricopa Planning and Development Department.
- All persons required to submit a NOI above shall also submit an (Erosion and Sediment Control Plan) ESCP to the City of Maricopa Planning and Development Department for review. A grading permit will not be issued until the Planning and Development Department reviews an ESCP for the area subject to the grading permit for compliance with applicable requirements.
- All persons required to obtain a dust control permit from the Maricopa County Air Quality Department (generally those persons covered by Maricopa County Air Pollution Control Rule 200, Section 305) who disturb 0.10 acres (4,356 square feet) or greater, shall provide a copy of such permit for review during a pre-construction meeting or upon request by the City.
- All persons engaging in construction activities shall comply with applicable law and all permits issued including, without limitation, implementing and maintaining site specific BMP's as described in the SWPPP or elsewhere to prevent significant materials or sediment from entering City right-of-way or a stormwater collection system. Periodic site inspections conducted at the

frequency set forth in the SWPPP to ensure that BMP's are operating correctly and have not been damaged or determined to be ineffective, shall be documented through completion of inspection logs or reports.

Post Construction Stormwater Management

- Upon completion of construction activities, the owner of the premises on which such construction activities occurred shall either directly or indirectly ensure that all necessary controls are in place and properly maintained to prevent non-stormwater discharges. Such controls include but are not limited to:
    - inspecting and verifying that the proper design, construction and usage of approved materials associated with all stormwater collection systems are per approved plans;
    - conducting necessary maintenance to ensure that all components of the stormwater collection systems function properly, including maintenance and stabilization of areas prone to or subject to erosion; and
    - correcting any deficiencies that are found pursuant to either a City of Maricopa or self-inspection.

Erosion Control

Mulching

The use of emulsified asphalt is not permitted as a mulching option on City properties or for City projects.

Protection of Trees and Vegetation in Construction Areas

Where plans provide for the preservation of trees and other vegetation, these areas shall be delineated (i.e. staked, flagged, or fenced) to prevent damage from construction equipment and other forms of access.

Sediment and Pollutant Control

SPC-1 Organic Filter Barrier

Per the Erosion Control Manual, the proper installation for organic filter barriers (e.g. wattles) requires them to be staked to the ground. These types of materials are not appropriate for preventing sediment discharges from soil or material stockpiles or other sediment sources stored on paved surfaces, or for use as inlet protection (see Section 4.3.3.5) where they cannot be staked down. However, they may be used as a secondary sediment control source (i.e. installed around a soil stockpile on a paved surface where appropriate inlet protection is also provided).

Sand Bag Barrier

Sand bags may not be used for the purposes of inlet protection. Where sand bags are used for other purposes, they shall be delineated (i.e. staked and flagged) to keep construction equipment from running over these structures. These must be inspected on at least a weekly basis to ensure they have not ruptured, and the sand has become a stormwater pollutant.

Silt Fence

For projects greater than five (5) acres requirements regarding perimeter control of the construction activity as provided in any applicable stormwater permit shall be met through the use of silt fences excepting those areas of high flow, construction site entrances areas where perimeter control are

impracticable (i.e. projects in the public right-of-way); and areas where all stormwater flows are directed to an on-site temporary sediment basin or sediment trap. Silt fence use at smaller projects is highly recommended as a perimeter control.

SPC-6 Re-Vegetation

Where plans provide for re-vegetation, installation of such vegetation shall take place as soon as practicable and these areas shall be delineated (i.e. staked, flagged, or fenced) to prevent damage from construction equipment and other forms of access.

SPC-7 Storm Drain Inlet Protection

To prevent flooding issues, storm drain inlet protection should only be used when sufficient construction site perimeter control is not possible (e.g. utility installations in public roadways or other public right-of-way areas). City of Maricopa personnel may remove any storm drain inlet protection device where flood conditions may exist. It is the responsibility of the operator in charge of day-to-day operations to replace or re-install these devices after the threat of flooding has subsided.

1. Course gravel and cinder block configurations and sand bags are not to be used to protect storm drains.

2. Geotextiles or fiber mats are the preferred storm inlet protection because they can be secured to the storm drain grate or by the weight of the storm drain grate and allow sufficient drainage to prevent flooding in normal conditions. Where geotextiles or fiber mats are used, these shall be connected to or secured by the storm drain grate and shall cover all areas of the inlet where sediment can enter.

3. When installing any storm drain inlet protection that is installed above grade traffic control devices must be placed at the end of both sides of the installation to prevent damage from public and construction traffic.

4. Organic filter barriers (e.g. wattles) cannot be used as a BMP for storm drain inlet protection where they cannot be staked down (see Section 4.3.3.1). However, they may be used in conjunction with acceptable methods of storm drain inlet protection (i.e. geotextile or fiber mats) as described above.

SPC-8 Temporary Sediment Basins

The City would prefer to limit temporary sediment basins to one per site. However, it recognizes that more than one may be needed at larger sites.

SPC-9 Temporary Sediment Traps

The City would prefer to limit temporary sediment traps to one per site. However, it recognizes that more than one may be needed at larger sites.

General Housekeeping

GH-4 Designated Washdown Areas

The City would prefer to limit wash down areas to one per site. However, it recognizes that more than one may be needed at larger sites.

REDUCTION OF POLLUTANTS IN STORM WATER:

No person shall throw, deposit, leave, maintain, keep, or permit to be thrown, deposited, left, maintained, or kept, except in appropriate containers or in lawfully established dumping grounds, any refuse, rubbish, garbage, or other discarded or abandoned objects, articles, and accumulations into or upon any component of the City storm sewer system or upon any public property. Additionally, no person shall do the same upon any private property in such a manner that could reasonably result in the release of pollutants to the City storm sewer system.

EC-5 Stabilized Construction Entrance

Course aggregate pad dimensions must be a minimum of thirty feet in width, three inches in depth, and fifty feet in length or the length of the longest haul truck, whichever is greater. Instead of a course aggregate pad, construction site entrance stabilization may also include a paved surface one hundred feet in length and twenty feet in width or a grizzly or rumble grate consisting of raised dividers a minimum of three inches tall, six inches apart, and twenty feet in length.

APPENDIX L
STREET NAMING AND ADDRESSING PROCEDURES
(RES 19-47 - APPROVED)

Street Naming and Addressing Procedures

I. PURPOSE

The City of Maricopa is hereby establishing Street Naming and Addressing Procedures (SNAP) for the following reasons:

- Need for uniform and consistent street names and addresses to enable emergency response personnel, and the general public, to readily locate a site by its assigned address.
- Need for increased efficiency of delivery services, including the United States Postal Service.
- Need for consistent and accurate legal documents.
- Need for convenience and proper orientation for travelers and citizens of the City of Maricopa.
- Need for documented guidance for orderly, well-planned growth.

II. AUTHORITY

A. Address Coordinator

- Applies the policy and procedures set forth within the City's adopted SNAP;
- Responsible for maintaining all street names and addresses for assignment, changes and updates within the City, including suite splits or suite combinations;
- Provides a main contact for addressing in the City of Maricopa;
- Reviews all new or proposed street names, including street name change requests;
- Consults with emergency service providers for their comments prior to forwarding with any new/change request to the Planning & Zoning Commission or City Council;
- Prohibits the creation of planned street segments and/or new aliases except by official action of City Council or Commission when street segments exist entirely within the City's jurisdiction.

B. Development Services Department

- Assists the Address Coordinator in the public process and document routing;
- Handles public notices, staff reports, and public presentations for public hearings;
- May initiate a Street Name Change.

C. City Council

- City Council approval is required for any requested changes to existing street names;
- May initiate a Street Name Change.

D. Planning & Zoning Commission

- Per the Subdivision Ordinance, approves Preliminary Plat proposals;
- Staff's recommendations include street names reviewed by the Address Coordinator.

E. Property Owner

- May initiate a Street Name Change in accordance with procedures in **CITIZEN PETITION (PRIVATE PARTY)**

III. REQUIRED INFORMATION - DOCUMENTS

A. Residential Projects

Street names and numbering shall be determined in accordance with the street naming and numbering policy adopted by City Council. The Address Coordinator shall review the proposed street names for duplication of names, appropriateness of names, and for overall compliance with the street naming policy.

1. New Single-Family Subdivisions or Permitted Residential Lots
    a. Preliminary Plat proposal: routed once completed per submittal requirements, including a map of street layout, the name proposed for each street, and an alphabetical list of the proposed street names proposed.
    b. Final Plat: Approved street names shall be included in the Final Plat for City Council approval and ultimately recordation.
    c. Residential structures constructed on parcels outside of formal subdivisions, which may require new dedication(s) or prescribed easement(s) that require street names, shall include the name proposed for each street for review and approval by the Address Coordinator and City Staff.
2. New Multi-Family Projects
    a. Final Plat: illustrate street layout, provide list of street names
    b. Exhibit showing building footprints and dwelling units per floor
3. Redevelopment and Renovations
    a. Any improvements that create new dwelling units require review and addressing designations by the Address Coordinator.

B. Mixed-Use and Non-Residential Projects

1. New Projects
    a. Final Plat proposals (if applicable) and/or development reviews require thoroughfare and building (and suite) layout of project to properly plan addresses into the City's GIS database.
    b. Recorded Plats (if applicable) and development approvals are required to finalize addresses into the City's GIS database.
2. Redevelopment or Tenant Improvements
    a. Any improvements that create new suites or dwelling units require review and addressing designations by the Address Coordinator.

C. Amended Plat, Lot Splits, or Minor Land Divisions

1. Applicant to supply the Address Coordinator with a lot map that highlights newly created lots in context of streets and surrounding conditions.

2. If multi-unit, the applicant shall supply the Address Coordinator with an exhibit detailing new building footprints and dwelling units per floor in context of streets and surrounding conditions.

D. Approved Annexation Documents

1. Pending annexation proposals shall be reviewed for street name conflicts and may require a City-Initiated street name change if the criteria warrants the change.

IV. STANDARDS AND FORMAT

A. Address Naming

1. Choice of Names: Names should be chosen that relate to the scale and location of a project.
2. Objectives - Names should be pleasant sounding, appropriate, and easy to read (so that the public, of all ages and abilities, can handle the name in an emergency situation).
3. Unacceptable Street Names - Names that do not conform to current State of Arizona 9-1-1 GIS Standards.
4. Name Length - The complete road name shall consist of no more than 20 characters, including directional prefix, street name, spaces, the USPS approved abbreviation for street type, and optionally the directional suffix.
5. Complete Name - A complete name shall consist of no more than four words, including directional prefix and street type.
   a. Examples:
      North Toya Vista Road: Prefix (1 word), Primary (2 words), Type (1 word)
      South Calle de Caballos: Prefix (1 word), Primary (3 words), Primary includes the type-equivalent (street type)

B. Address gridlines

1. Per City Address grid, which follows the Pinal County Addressing Grid

C. Address format

1. The address format used by the City is made of as many as seven (7) components (frontage number, directional prefix, street name, street type, directional suffix, unit type, and unit number). Formats shall abide by rules established in ADDRESS FORMAT RULES (page 5).

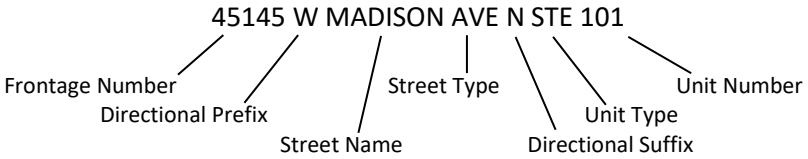

- Frontage Number: Five-digit number
- Directional Prefix: One-character, values are N, S, E or W
- Street Name: Characters must meet signage requirements
- Street Type: USPS standards (maximum 4-characters)

- Directional Suffix: One-character, values are N, S, E or W
- Unit Type: USPS standards (i.e. APT = Apartment and STE = Suite, max 4-characters)
- Unit Number: A maximum of a 4-digit number

D. Address ranges/intervals

1. Address ranges are assigned by the Address Coordinator to each block (street segment). A block is a street segment defined by intersecting streets or jurisdictional boundary. Addresses assigned to a frontage street (block) must fall within the address range of the block.

V. RULES

A. Coordination with Development Approval

1. An address shall not be assigned to any Single-Family Residential lot within a subdivision prior to City Council approval of the Final (or Amended) Plat.
2. An address shall not be assigned to any Single-Family Residential home on a residential parcel prior to the dedication of proper egress/ingress being named in accordance with these procedures.
3. A permanent address shall not be assigned to a new multi-family, commercial, mixed-use, or industrial development unless approved as prescribed by the Zoning Code.

B. Address Assignment

1. All buildings subject to the permitting process shall have an address or identifier.
2. Addresses shall be based upon the building's frontage, measured from the center of the building or pad, and address number assigned per City grid.
3. Multiple Commercial Buildings on one lot or project. Multiple addresses may be assigned to the same lot or parcel as long as a Primary Address is identified for the County records. Addressing shall be assigned using the most appropriate and logical method for that lot or project as determined by the Address Coordinator.
4. Multiple buildings in a complex or campus may have separate addresses, one address and building identifiers, one address and suite numbers, or any combinations thereof, as determined by the Address Coordinator. *Building identifiers are not considered part of the address.*
5. Multiple houses on interior lots (Duplexes, Rear Houses)
    a. Each house must have its own distinct address number. Fractions (1/2) or the words "front" or "rear" to distinguish each house are not allowed. Exceptions may be considered for unexpected in-fill lot splits or plat amendments when necessary, as determined by the Address Coordinator and emergency responders.
    b. Address numbers are assigned in ascending address intervals from the frontage street across the lot (duplexes) or toward the back of the lot (rear house)
6. Special districts created from large or unique projects (i.e. Malls, Amusement Parks, Airports, etc.) may have unique addressing issues and often require special consideration. Any

addressing issues (i.e. street names, address numbering sequence) in a special district are unique and must be confined to those areas only. Any addressing in a special district shall approved by the Address Coordinator.

7. Address numbers shall be assigned with even number on the North and West sides of the road and odd numbers shall be assigned to South and East sides of the road.

   EXCEPTION: Circular or Loop thoroughfares shall be addressed with the odd number on the outside and even number to the inside.

C. Address format rules

1. Frontage Number (required)
   a. Buildings and lots are assigned addresses from the street determined by the Address Coordinator as being the frontage street. The frontage street is designated as the street segment or block of the main front of the addressed building, suite or lot faces.
2. Directional Prefix (required)
   a. All street names shall begin with one directional prefix, north, south, east, or west, which shall be assigned with permanent addresses. Additional unnecessary prefixes and suffixes shall be avoided. Combinations of directions are not acceptable. Example: Northwest Sierra Circle.
   b. The directional prefix (1 character in length, (E) – East, (W)-West, (N)-North, (S)-South) is determined by the direction of the street from the primary address gridlines.
3. Street Name (required)
   a. The street name must contain only letters and must not exceed the street sign letter limit**.**
   b. Street names with similar spelling or are pronounced similarly should be avoided. Examples: “Adler/Alder”, “Loredo/Loreda”, “Lagoon/Laguna”.
   c. Numbered streets shall not be spelled out, but must comply with the following format: e.g. 2nd, 156th, etc.
   d. Names tending to be confused as homonyms are not permitted.
   e. Names that tend to be slurred or have pronunciations that run together are not permitted.
   f. Different spellings of the same name are not permitted.
   g. Directional name or street type cannot be used in the street name.
      - Example: E. ST ANDREWS AVE. must be E. SAINT ANDREWS AVE.
      - Example: E. SOUTH HAVEN DR. must be E. HAVEN DR.
      - Example: E. NORTH ST. must be E. NORTHSTAR ST.
4. Street Type (required)
   a. The street type used following a street name will be consistent throughout the alignment.
   b. The following are examples of acceptable street types to use within the City. (Refer to the https://pe.usps.com/text/pub28/28apc_002.htm , USPS Street Suffix Abbreviations)

AVE	Avenue	**EXPY**	Expressway
BLVD	Boulevard	**FRWY**	Freeway
CIR	Circle	**OFF**	Off Ramp
CT	Court	**ON**	On Ramp
DR	Drive	**ACWY**	Accessway
HWY	Highway	**ALY**	Alley
LN	Lane	**PATH**	Path
LOOP	Loop	**PLZ**	Plaza
PKWY	Parkway	**PRIV**	Private
PL	Place	**RAMP**	Ramp
RD	Road	**SQ**	Square
ST	Street	**TERR**	Terrace
TRL	Trail	**PASS**	Pass
WAY	Way		

c. Thoroughfare (a generic term for providing for the movement of traffic and access to various land uses) types should be identified based on the following characteristics:

- **Avenue**: Thoroughfares that run in any direction. A common or default street type.
- **Alley**: Shared accessway at the rear of properties, common for utility and refuse.
- **Boulevard**: A broad thoroughfare that acts as a collector and often has a median. (Typically a section line, mid-section line, quarter section line, collector or arterial.)
- **Circle**: A curvilinear thoroughfare that returns to its starting point.
- **Court**: Reserved for cul-de-sac designed street types. See **VI.A.4. CUL-DE-SAC DESIGN** for further details.
- **Drive**: Typically, a roadway that does not connect to an arterial. Where that roadway is a continuation of an existing roadway, the roadway shall carry the same designation.
- **Highway**: Designated county highways, state route, state highways or federal access routes.
- **Lane**: Typically, a roadway that does not connect to an arterial. Where that roadway is a continuation of an existing roadway, the roadway shall carry the same designation.
- **Loop**: A thoroughfare that begins and ends on the same side of the originating street but not in the same place.
- **Parkway**: A route or park drive typically with limited access and generous median and shoulders.
- **Place**: Short roadway less than 1500' that may cross a roadway that may end in a cul-de-sac or dead end.
- **Road**: Typically, a section line, mid-section line, quarter section line, collector or arterial. Where that roadway is a continuation of an existing thoroughfare, the roadway shall carry the same designation.
- **Street**: Typically, a roadway that connects to a collector or arterial. Where the roadway is a continuation of an existing roadway, the roadway shall carry the same designation.
- **Trail**: A winding thoroughfare.

- **Way**: Meander, curvilinear or diagonal typically less than 600', or short street segment typically not addressed.

5. Directional Suffix (context-dependent)
   a. Circle and loop streets with parallel segments that were not assigned addresses, even on the inside odd on the outside, require a directional suffix to further identify an address.
   b. The directional suffix is 1 character in length ((E) – East, (W)-West, (N)-North, (S)-South) and is determined by the direction of the street from the primary address gridlines.
6. Unit Type (context-dependent)
   a. In accordance with U.S. Postal Service Standards, a sub-structure suffix (Suite, Unit, etc.) is for one primary frontage number address that is further sub-divided.
7. Unit Number (context-dependent)
   a. Unit numbers are to be assigned systematically and intuitively for ease of navigation.
   b. Numeric (101, 102, 103…) designations are the only acceptable values for assigning sub-structure suffixes (Suite, Unit, Space). Alpha's (A, B, C…) or alpha-numeric (A1, A2…) are not allowed.
      - The first digit indicates the floor.
      - Up to 99 units: 101-199, 201-299, 301-399, etc.
      - Greater than 99 units: 1001-1999, 2001-2999, 3001-3999, etc.
   c. Simple configurations, such as a single building with a row of suites, should begin numbering at the main access and flow linearly. Office and commercial units have the potential to merge or split units. This is handled by allowing one unit number for every 20 feet (preferred) or by incrementing the number by 5 or 10.
   d. Apartment or commercial complexes with multiple buildings should begin to the right of the main access and flow counter-clockwise, ending at the left side of the main access. Units in the buildings should also flow counter-clockwise.
      i. Multiple Buildings: Building shall use alpha (A, B, C…) or numbers (1, 2, 3…) for building identification only, but shall not be considered part of the address.
   e. Internal access suites should use even-odd numbering along the hallway. Complicated configurations should flow counter-clockwise.
   f. Mobile home parks will be assigned space or lot numbers. Numbering will begin to the right of the main access and flow counter-clockwise. Even-odd numbering should be used down internal streets.

VI. STREET NAMING

A. New Street Names

1. The Address Coordinator must review and approve all new street name proposals.
2. Existing Alignments. Honor the alignment of existing streets whenever possible.

a. The street names assigned to newly developed streets must use the name of an existing aligned street.

b. If no aligned street exists (like in undeveloped areas) or the newly developed street is in a themed subdivision or area, brand new street names may be assigned.

c. The aligned street name used for new streets, must come from a street that is the best overall possible aligned street.

d. The new street and aligned street segment(s) cannot be offset by more than 150 feet Exception: With approval from the Address Coordinator, a street may be offset by more than 150 feet only if it returns to its original alignment and maintains the streets overall alignment

e. Aligned street names separated by natural or manmade physical barriers are to retain the same street name

f. Once a name has been used, it may only be used again within the same alignment or on the same street.

g. Changes to street names or new street names must apply to the entire length of an alignment when no aliases exist or to the entire length of an existing alias. The only exceptions to be granted to this requirement is to create a new alias segment within the City's entire jurisdiction or adopt a Development Master Plan Street Name Plan.

3. Continuity

a. A continuous street, or one proposed to be continuous, should bear the same name throughout, even though it changes directions. If the street is interrupted by a channel, freeway, railroad, etc., and eventual connection is not probable, the segments may bear different names.

4. Cul-de-sac Design

a. Less than 100 feet. When the furthest radius point of the end of a cul-de-sac to the closest projected right-of-way line of the intersecting street with the cul-de-sac,is less than 100 feet, the cul-de-sac and its addresses are considered part of the intersecting street. The addresses for the cul-de-sac will be either all odd or all even numbers, since the cul-de-sac exists only on one side of the street and the cul-de-sac will not receive a differentiated street name or sign.

b. 100 feet or more. If the end of the cul-de-sac exceeds the condition defined above, the cul-de-sac shall be treated as a new street segment with street name assignment and addressing like any other street. The street type shall be a "Court" for consistent identification by emergency services.

5. Curvilinear Streets

a. When a street is not an address gridline and curves by 90 degrees or more from its original direction, it should be split into (2) two unique street names at the discretion of the Address Coordinator. The different street names would be assigned half way through the bend (preferably forming an intersection).

Exception: With approval from the Address Coordinator, a curvilinear street that is not an address gridline, and meanders through a themed subdivision or area, may retain the street's name throughout the themed subdivision or area.

6. Recorded privately owned streets and driveways

   a. Private street and driveway names are to comply with these Street Naming and Addressing Procedures.

B. Name Duplication

1. Similar sounding names are considered as duplications regardless of spelling. Duplication of names within City limits is not permitted.

2. Discouraged similar/duplicate street name examples

Bonita Street	Bonito Court	Colonia Way	Colonial Drive
Harbor Drive	Harbour Drive	Desert Lane	Desert Lane Court
Huron Court	Heron Drive	S. Johnson Lane	W. Johnson Lane
Longspur Lane	Larkspur Street	Lagoon Drive	Laguna Drive
Moorea Drive	Moore Avenue	Ocotillo Lane	Ocotillo Rd
Quail Court	Gail Court	Regatta Drive	Riata Street
Robins Street	Robbins Street	Saguaro Street	Sahuaro Street
Saint Ruben Ave	Saint Andrews Ave	Shaylee Lane	Shady Court
Straford Avenue	Stanford Avenue	Willet Road	Willis Road

C. Renaming Existing Streets

1. When naming a street segment previously named and acknowledged in recorded documents, follow procedures in XI. ADDRESS CHANGES & STREET NAME CHANGE (AMENDMENT) POLICY.

VII. STREET NAME SIGNS

A. Street Sign Letter Limit

1. For street sign consistency, the combination of street name, street type and any spaces cannot exceed twenty (20) characters.

2. Street names may only be abbreviated on street name signs with the approval of the Address Coordinator.

B. Responsibility

1. Applicant

   a. Public Streets. The applicant is responsible for installing new public rights-of-way street name signs prior to final inspection and temporary occupancy. The new street name signs must conform to the current design specifications, placement and number requirements of the Design Standards Manual.

   b. Private Streets. The applicant is responsible for installing and maintaining private street name signs within the City. The street name signs must conform to the current design specifications, placement and number requirements of the Design Standards Manual at the time of install and time of replacement.

2. City

   a. The City assumes responsibility from the applicant, with approval by the City Engineer, of all existing public rights-of-way street name signs within the City.

   b. The City's Public Services Department is responsible for the maintenance of all existing public rights-of-way street name signs within the City.

   c. Upon notification from the Address Coordinator of a street name change, the Public Services Department is responsible for changing the street name sign within 30 days from the effective name change date.

   d. The City's Address Coordinator is responsible for providing the correct information (i.e. street name, address range) for each street name sign.

VIII. ADDRESS SIGNS AND PLACEMENT

A. Responsibility

1. Applicant

   a. The applicant is responsible for installing new address numbers to buildings and/or units prior to occupancy of the building. The new address numbers must conform to the design specifications, placement and number requirements of these Street Naming and Addressing Procedures and Adopted City Codes.

2. Owner

   a. The owner is responsible for the display and maintenance of the address number and/or unit number assigned to their residence or business within 30 days of annexation or change of address process.

3. City

   a. The City Address Coordinator is responsible for providing address information for new and changing addresses to all necessary agencies and property owners.

B. Placement

1. All address numbers and/or unit numbers must face their assigned frontage street and be mounted on a permanent, stationary, and durable object (preferably a building), unobstructed always by vines, screens, or anything that would tend to hide or obscure the number.

2. If the addressed building is not viewable from the frontage street, the address number and/or unit number should be placed on a lawn stake, curbside postal mailbox or similar permanent fixture viewable from the frontage street. In rural areas, it is suggested that the address number and/or unit number be placed on both the mailbox and the building.

3. For each lot frontage address number, a corresponding number shall be placed in the alley in the rear of the house or business where applicable.

4. A principal building occupied by more than one business and family dwelling unit shall have an identification number displayed at each separate entrance.

5. Color/Style

a. Color of number/letters and background shall contrast. Style of numbers/letters is optional; however, height, width and thickness of each letter or number must conform with the following minimum requirements:

Distance at which Letters/Numbers shall be legible from center of thoroughfare	Height	Width	Thickness
Up to 200 feet	4”	2.8”	3/4”
Up to 300 feet	6”	4.2”	15/16”
Up to 400 feet	8”	5.0”	1 1/4”

b. Distance to be measured from the center of the thoroughfare on which building fronts whether dedicated or undedicated. For commercial malls, centers, villages, and squares, distance to be measured from the center of the access to the structure(s).

IX. PROCEDURES

A. New Addresses and Street Names

1. Preliminary Stage of Project

   a. The preliminary overall site plan must be submitted to the Address Coordinator for verification of street names and lot/building footprint locations. Subsequent changes to the preliminary overall site plan must also be forwarded to the Address Coordinator for re-verification.

   b. Preliminary addresses and street names are assigned by the Address Coordinator and must comply with these Street Naming and Addressing Procedures.

   c. All documents of preliminary addresses and proposed street names are archived by the Address Coordinator. Preliminary addresses and proposed street names are for planning purposes only and should not be used until the project reaches final stage.

2. Final Stage of Project

   a. A (digital & paper) copy of the final recorded or amended plat with all final changes must be submitted to the Address Coordinator.

   b. The Address Coordinator reviews and makes any final changes to addresses and street names of the final plat.

   c. The Address Coordinator is responsible for all address and street name databases.

   d. The Address Coordinator notifies the required entities of final address and street name information, including but not limited to utilities, county, USPS, and emergency contacts.

   e. All documents of final addresses and final street names are archived by the Address Coordinator.

B. Existing Addresses and Street Names

1. All sections lines shall carry only the name recorded within the City of Maricopa. All other street names shall follow the rules set forth in this document.

2. Annexations

   a. Addresses and street names of County areas annexed into the City must be changed to City street names and address ranges to conform to these Street Naming and Addressing Procedures.

   b. After Council approval and notification of annexation from Pinal County Recorder's office, the Address Coordinator is responsible for changing the existing County addresses and street names.

   c. The Address Coordinator is responsible for notification of the required people and agencies of any address change due to annexation within ten (10) days.

   d. Properties annexed into the City shall display the new city assigned address within thirty (30) days following notification of an address change from the**.**

   e. Address Coordinator shall coordinate with connecting authority prior to changing adjacent or connecting streets.

C. Secondary Addresses

1. Signs, landscape meters, water meters, electric meters and other structures are assigned addresses for location purpose as deemed necessary by the Address Coordinator.

X. DISTRIBUTION/NOTIFICATION

A. New Addresses

1. When any address assignment becomes effective, the Address Coordinator shall send notices to all impacted agencies.

B. Changes to Existing Addresses or Street Names

1. Upon approval of an address change, the City will provide a written notification to the property owner(s) advising them of the new address.
2. Upon approval of an address change, the Address Coordinator updates all internal City databases (that require an address) with the newly assigned address.
3. Upon approval of an address change, the Address Coordinator notifies all required external entities of the newly assigned address.

XI. ADDRESS CHANGES & STREET NAME CHANGE (AMENDMENT) POLICY

A. Proposed Address Changes

1. Address number and/or unit number

   a. A private owner requesting change to an existing address number and/or unit number must submit an address request application through the City's Permit Center. A fee is due at the time of application submittal.

   b. City staff can correct addressing errors in coordination with the property owner(s) to resolve conflicts with the purpose of these procedures.

c. The Address Coordinator will review to confirm the request conforms with the standards and rules of the address guidelines within 30 days. If in conformance, the address change will be approved administratively.

d. If approved, the Address Coordinator will advise all impacted agencies of the pending change. The approval will be effective within thirty (30) to ninety (90) days as determined by the Address Coordinator.

B. Proposed Street Name Changes

1. Intent and Authority

   a. To promote sound and desirable street naming and addressing practices, while maintaining accurate and concise street naming and addressing records. In harmony with this purpose, these procedures shall not be amended except to (1) correct an error or oversight in the procedures, or (2) to correct/change the name or type of an existing street in the City of Maricopa.

   b. Street name changes (new name assignments) may be initiated by (1) one or more members of the City Council, (2) an owner of land abutting the street involved in the request, or (3) by City Staff through the City Manager.

2. Guidelines for staff recommendation

   a. Staff reviews shall include, but not be limited to, the following criteria when renaming existing streets within the City. In no order of preference, consider:

      - Duplication (or similarity) in the street names with other existing names of different alignments
      - Historic or cultural purpose for the street name
      - The number and types of residents or buildings affected by the proposed change
      - Length of time the street name has been in use
      - Length of the street affected by the proposed change
      - Traffic volumes accustomed to the existing street name
      - Compatibility of the other street names in the area
      - Impact to emergency response
      - The necessity of the proposed change

3. City-Initiated Changes (this step does not require a Public Hearing)

   a. Initiation by Mayor or Councilmembers

      - To initiate a street name change, Mayor or Councilmembers may take action to request staff review and make recommendation of a proposed street name change
      - Staff to notify the public per these procedures
      - Staff to prepare action item and resolution for Council review and approval

   b. Initiation by City Staff through the City Manager

      - To initiate a street name change, staff may agenda a request for City Council to initiate a street name change
      - Staff to notify the public per these procedures
      - Staff to prepare action item and resolution for Council review and approval

4. Citizen Petition (private party)

   a. A written petition to change the name of a public or private street may be submitted by any owner of an abutting lot or parcel. This petition must include:

      - Date of application
      - Applicant /property owner contact information
      - Applicant/ property owner petition
      - Signature of the applicant/ property owner
      - Application fee
      - Current street name
      - Proposed street name, with two alternative choices
      - Justification for the change
      - Signature of at least 51 percent of the individuals that own a lot or parcel abutting the street

   b. Staff to review completeness of the petition prior to moving the request forward

      - Applications denied due to Incompleteness may be revised and resubmitted
      - Appeals should be made to the Development Services Director

   c. Staff to notify the public per these procedures

   d. Staff to prepare action item and resolution for Council review and approval

5. Public Notice Requirements

   a. All notice materials to include Public Hearing date, time, and location with the existing and proposed street name with an exhibit that identifies the limits of the proposed change.

   b. Notice materials shall be posted or mailed at least ten (10) days prior to the public hearing date.

   c. Mailed notices to all property owners immediately affected by the street name change.

   d. Posted notices measuring 24” x 36” located one per block or street segment.

   e. Any other public hearing notice procedures required by state law and open meeting law.

   f. A resolution may be scheduled for the same meeting, seeking action from the City Council to approve or deny the request. Staff shall prepare a report and recommendation based on the criteria of these procedures.

6. Approval

   a. City Council, by resolution, may approve a street name change replacing an existing name of a thoroughfare within City limits after a Public Hearing.

   b. A signed resolution shall be recorded with Pinal County.

   c. Address Coordinator shall send electronic notices of the pending change to all impacted agencies. A follow-up electronic notice shall be sent when the change becomes effective.

   d. The impacted property owners shall be notified by mail of the approved change and timeline for the change to become effective.

7. Making the Change Effective

   a. Within thirty (30) to ninety (90) days, the street name will become effective, as determined by the Address Coordinator. During this time, the street signs shall be replaced by the Public Services Department.

   b. Address Coordinator shall communicate the needed change of street signs to the Public Services Department.

   c. The applicant is responsible for:

      - Fees that the City incurs from the sign replacements and recordation of any documents required at the County Recorder
      - If warranted, an affidavit of correction may be required to be prepared and submitted for recordation purposes.

XII. GLOSSARY OF TERMS

Address Gridlines: City map establishing gridded geographic address coordinates.

Alignment: The arrangement, positioning, adjustment or formation of a centerline along a road or street or thoroughfare, or extension of that line.

Block: A street segment defined by street intersection(s), end of street, or jurisdictional limits.

City Code: A set of adopted legislative enacted regulations including the Zoning Code, International Building Code (as amended), and International Fire Code (as amended).

Cul-de-sac: A minor thoroughfare having one open end and terminated at the other by an approved turnaround.

Directional Prefix: A (single letter) component of the legal address, representing the cardinal direction of the street from the grid center (i.e., N, S, E, W).

Directional Suffix: A (single letter) component of the legal address, representing an additional cardinal direction of the street from the grid center (i.e., N, S, E, W), used to more uniquely define a street.

Frontage Number: A (numeric) component of the legal address which uniquely identifies, a structure or parcel (i.e., 510 E Florence Blvd.).

Frontage Street: The street segment or block the main front of an addressed building, suite, or lot faces.

Private Streets: Thoroughfares retained and maintained under the ownership of private individual(s) and/or associations and intended for both private and/or public use. Distinctly not publicly owned and maintained.

Public Rights-of-way: Thoroughfares dedicated and accepted for public use and are retained and maintained by the City, State of Arizona, or the United States Government.

Special District: Large regional projects (i.e. Malls, Amusement Parks, Airports, etc.) that have unique addressing issues and require special consideration.

Street Name: An (alpha) component of the legal address which is given to both public and private streets to distinguish one street from another.

Street Type: An (alpha) component of the legal address which modifies the name to distinguish specific functional and/or physical characteristics of the street to which the address is assigned (i.e., place, court, cul-de-sac, etc.).

Sub-Structure Suffix (Unit Type): A (numeric) component of the legal address used to identify suites, apartments, and condominium units within high-density developments.

APPENDIX M

CITY OF PHOENIX TRAFFIC BARRIER MANUAL

City of Phoenix

TRAFFIC **BARRICADE** MANUAL

9th Edition

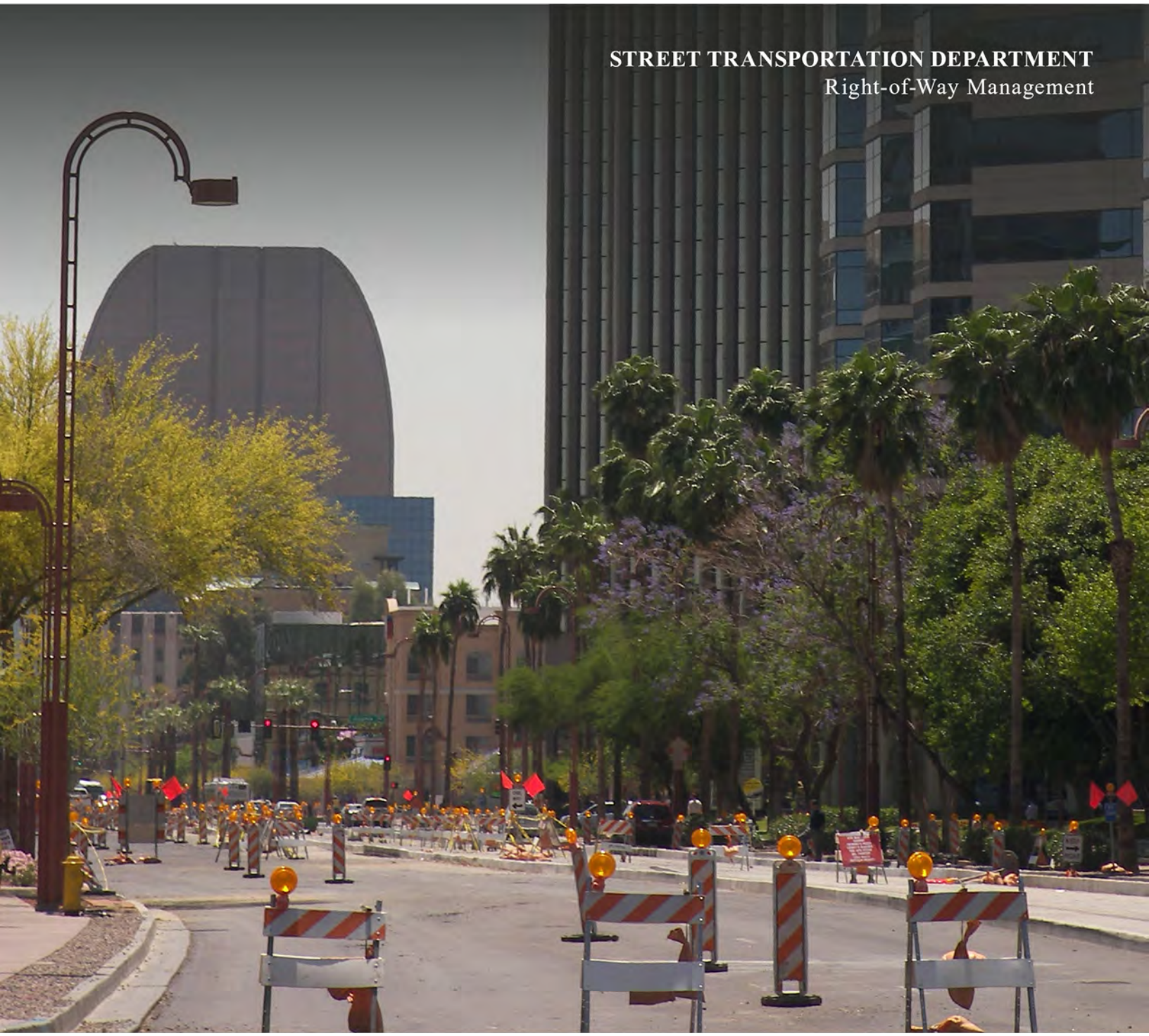

STREET TRANSPORTATION DEPARTMENT
Right-of-Way Management

KEY REFERENCE TABLES

Table 1 – Taper Length Calculations

Speed Limit	Formula
40 mph or under	$L = WS^2/60$
45 mph or over	$L = WS$

L = Taper Length (feet) / W = Width of Lane (feet) / S = Posted Speed Limit (mph)

Table 2 – Typical Taper Length And Spacing Between Devices

Speed Limit	Taper Length (L, feet)			Spacing Between Devices, feet	Minimum Number of Devices Needed
	Lane Width				
	10	11	12		
25	104	115	125	25*	6
30	150	165	185	30	7
35	204	225	245	35	8
40	267	293	320	40	9
45	450	495	540	45	13
50	500	550	600	50	13
55	550	605	660	55	13

** Distance between traffic cones used for tapers should not exceed 25 feet regardless of speed.*

NOTE 1: Values shown in Table 2 are for merging tapers only. Other taper lengths should be approximately L/2 and number of devices appropriately halved.

NOTE 2: Advance warning signs should be placed a minimum distance (L) in advance of taper.

Table 3 – Taper Length Criteria For Temporary Traffic Control Zones

Type of Taper	Taper Length
Merging Taper	At least L
Shifting Taper	At least 0.5 L
Shoulder Taper	At least 0.33 L
One-Lane, Two-Way Traffic Taper	50 feet minimum, 100 feet maximum
Downstream Taper	100 feet per lane

Table 4 – Tangent Length Criteria For Temporary Traffic Control Zones

Type of Taper	Taper Length
Merging Tangent	Recommended 2L, Minimum L
Shifting Tangent	Recommended L, Minimum 0.5 L

The City of Phoenix 2017 Traffic Barricade Manual (TBM) was prepared as a guide to enhance traffic safety and mobility for the public and to better manage temporary encroachments in the City of Phoenix (City) right of way. It is intended to help:

- Expedite construction projects while keeping workers and the public safe
- Minimize inconvenience and interference to the public, and
- Provide accessible temporary facilities for all users

The primary reason streets exist is to provide safe and efficient mobility. Therefore, streets shall remain unrestricted and functional as much as practical.

The ninth edition of the TBM augments and complements the Manual on Uniform Traffic Control Devices (MUTCD) and the Arizona Supplement to the MUTCD. The TBM was written to share the field experience and expertise of the City's traffic control inspectors and professional traffic engineers regarding what techniques have proven to work best on busy city streets. This document is consistent with the MUTCD, which specifies in Section 1A.13 that engineers, or those working under the direction of an engineer, may exercise judgment in the applicability, design, operation or installation of a traffic control device. This premise is important since the MUTCD cannot address all of the diverse conditions a practitioner faces in controlling traffic on city streets.

Differences exist between urban streets and higher speed rural highways due to characteristics unique to these facilities. Although urban engineers deal with many of the same design and traffic control issues that rural engineers encounter, urban conditions require more consideration of the following:

- Pedestrians, including those with disabilities
- Access demands at driveways and side street intersections
- Bus, light rail, and other forms of public transit
- Bicyclists

The City of Phoenix Traffic Barricade Manual was first published in 1961, with subsequent editions published in 1965, 1970, 1974, 1980, 1989, 1998 and 2007. To enable the TBM to be practical and helpful to the user, the City of Phoenix may periodically update portions of the TBM using instructional addenda. This edition of the Traffic Barricade Manual will be effective at the time of City Council adoption, superseding all previous versions.

Copyright © 2017

City of Phoenix - Street Transportation Department

Traffic Services Division

All rights reserved.

The primary goal of the TBM is to provide guidance for implementing the most effective temporary traffic control practices and techniques for the City's urban public streets. This goal was achieved through various input received from staff, professional organizations, other City departments, utility companies, contractors and other Manual users. The City expresses its appreciation to all those who contributed valuable input toward completion of this Manual.

The City is particularly appreciative of the general guidance and input provided by the following groups towards the completion of this Manual:

- City of Phoenix Mayor's Commission on Disability Issues
- American Traffic Safety Services Association (ATSSA), Arizona Chapter
- Associated General Contractors of America (AGC), Arizona Chapter
- Various Maricopa County Municipalities

Table of Contents

1 RIGHT OF WAY MANAGEMENT 1

I. What is Right-of-Way (ROW)? 1

II. Why Are Right-of-Way Management Procedures Necessary? 1

III. Components of ROW Management 2

IV. Certification 2

2 TRACS PERMITS 7

I. Who Needs a TRACS Permit? 7

II. How to Obtain a TRACS Permit 8

III. Regulations That Govern TRACS Permitting 10

IV. Temporary Traffic Control Plans: When Are They required? 15

V. How Do I Obtain a Haul Permit? 16

VI. How Do I Obtain a Valet Permit? 19

VII. Parking Meters 20

3 ACCOMMODATING PEDESTRIAN AND BICYCLIST SAFETY 23

I. Pedestrian Considerations 23

II. Pedestrian Requirements for Building Demolition / Construction 26

III. Covered Pedestrian Walkways 27

IV. Bicyclist Consideration 30

4 ACCOMMODATING WORKER SAFETY 33

I. High-Visibility Safety Apparel 33

II. How Service Vehicles Can Best Be Used to Promote Safety 34

III. Special Information for Surveyor Workers 37

5 EXISTING TRAFFIC CONTROL DEVICES 39

I. Traffic Signs 39

II. Traffic Signals 39

III. Removal of Conflicting Pavement Markings 42

IV. School Zones 42

6 TEMPORARY TRAFFIC CONTROL DEVICE APPLICATIONS 45

I. Why Use Temporary Traffic Control Devices? 45

II. Removal of Temporary Traffic Control Devices When Not Applicable 45

III. Sign Requirements and Applications 46

Table of Contents (Continued)

IV. Types of Signs 48
V. Work Zone Speed Limit Procedures 54
VI. Barricades and other Channelizing Devices 55
VII. Barricade Warning Lights 61
VIII. High-Level Warning Device (Flag Tree) 61
IX. Flashing Devices and Applications 62
X. Arrow Boards 62
XI. Portable Changeable Message Signs 64
XII. Temporary Pavement Markings 64
XIII. Temporary Traffic Signals 65
XIV. Concrete Barrier 66
XV. Water-filled Barrier 66

7 MANUAL TRAFFIC CONTROL – POLICE AND FLAGGERS 67
I. Police Control 67
II. Flagger Controls 69
III. Police Officer and Flagger Functions 69

8 QUALITY REQUIREMENTS FOR TRAFFIC CONTROL DEVICES 71
I. Quality of Temporary Traffic Control Devices 71
II. Quality Classifications 72
III. Application of the Quality Guideline 73
IV. Quality Guidelines for Channelizing Devices and Signs 73
V. Warning Lights 78
VI. Arrow Boards 78
VII. Changeable Message Signs 79
VIII. Pavement Tape, Paint, and Raised Pavement Markers 79
IX. Storage of Temporary Traffic Control Devices 80

9 SPECIAL EVENTS 81
I. Special Event Policy 81
II. Planning an Event on City Streets 82

Table of Figures

Figure 1 – Sample TRACS Application 9
Figure 2 – Downtown Right of Way Management Area Map 14
Figure 3 – Sample Haul Plan Checklist 16
Figure 4 – Valet Application 21
Figure 5 – Sidewalk Diversion Out-of-Street 24
Figure 6 – Sidewalk Diversion In-Street 25
Figure 7 – Sidewalk Closure Midblock (Access Retained to Business/Bus Stop) 26
Figure 8 – Sidewalk Closure at Corner 27
Figure 9 – Covered Pedestrian Walkway 27
Figure 10 – Service Vehicle Operation 36
Figure 11 – Lateral and Longitudinal Location of Primary Signal Faces (Figure 4D-4, MUTCD, 2009) 41
Figure 12 – Regulatory Signs 50
Figure 13 – Warning Signs 53
Figure 14 – Work Zone Sign 54
Figure 15 – Traffic Cones 57
Figure 16 – Barricades and Other Devices 60
Figure 17 – Advance Warning Arrow Board Display Specifications (Figure 6F-6, MUTCD, 2009) 63
Figure 18 – Flagging Procedures 70
Figure 19 – Work Zone Signs Quality Evaluation Guide 75
Figure 20 – Type I, II, or III Barricade or Vertical Panels Quality Evaluation Guide 76
Figure 21 – Traffic Cone Quality Evaluation Guide 77
Figure 22 – Street Closure Signing (Hard and Soft) 84
Figure 23 – Turn Lane Treatments for Hard Closures 85
Figure 24 – Thru Lane Closed (Maintain Two Lanes – Downtown use) 86
Figure 25 – Left Thru Lane Closed (Maintain two thru lanes by prohibiting left turns) 87
Figure 26 – Mid-block Left Lane Closed – Maintain two lanes using left turn lane 88
Figure 27 – Center Thru Lane Closed (Maintain two thru lanes) 89
Figure 28 – One-Way Street - Right 2 Lanes Closed (Create right turn lane – Downtown use) 90
Figure 29 – Right Curb Lane/Bike Lane Closed (Maintain two thru lanes; end bike lane) 91
Figure 30 – Nearside Thru/Right Lane Closed (Maintain two thru by prohibiting left turns) 92

Table of Figures (Continued)

Figure 31 – Far-side Right Lane Closed (Maintain two lanes prohibiting left turns and create right turn lane) 93
Figure 32 – Midblock 2 Right Lanes Closed (Maintain one thru lane) 94
Figure 33 – Midblock 2 Right Lanes Closed (Maintain two lanes using left turn lane) 96
Figure 34 – Entire Direction Closed (Maintain one thru lane across centerline) 98
Figure 35 – Entire Direction Closed (Raised medians – Maintain one thru raised median) 100
Figure 36 – Far-side Bike / Right Lane Closed (Create right turn lane) 102
Figure 37 – Far-side Bike / Right Lane Closed (Create right turn lane – Downtown use) 103
Figure 38 – Midblock Bike/Right Lane Closed (Maintain two thru lanes using two-way left turn lane) 104
Figure 39 – Flagging to Facilitate Construction (To stop traffic as needed) 105
Figure 40 – One Lane Two-Way Traffic using Flaggers (Scene 1: Pre-warners and approach) 106

Table of Tables

Table 1 – Taper Length Calculations ii
Table 2 – Typical Taper Length And Spacing Between Devices ii
Table 3 – Taper Length Criteria For Temporary Traffic Control Zones ii
Table 4 – Tangent Length Criteria For Temporary Traffic Control Zones ii
Table 5 – Summary of Violations and Penalties 5
Table 6 – Minimum Advance Notice for Restrictions/Closures 11

In 1960, the City of Phoenix recognized the need for an official manual to provide positive and effective guidance for traffic control in construction and maintenance areas. The City of Phoenix published the first Traffic Barricade Manual[1] in 1961, a full decade before the U.S. Department of Transportation added guidance for work zone traffic control in the MUTCD[2]. Since that time, the City of Phoenix Manual has become a common reference for urban work zones in Maricopa County and throughout the country. This edition is the ninth revision, with each revision being published as needed to share new ideas and guidance, while remaining in substantial conformance with the MUTCD.

The primary function of street right-of-way (ROW) is to provide safe and efficient movement of people and goods, while its secondary function is to provide access for public utilities. To successfully accommodate both functions, city streets must be built with consideration as to how streets can be improved and/or repaired in a practical and efficient manner. Because the functions of a street are vitally important, essential construction, maintenance, and event activities within City street ROW shall be planned to minimize the disruption of traffic service and maximize access to adjacent land use.

What's New in the 2017 Edition?

This Manual reinforces existing practices and introduces the new or revised procedures for managing ROW more effectively. This Manual includes improved guidance for:

- Special event management
- Better accommodations for individuals with disabilities
- ROW training every two years with annual certification
- Maintaining traffic signal visibility
- Procedures when working near bus stops and light rail
- Coordinating work with schools
- Minimum traffic sign sizes
- Minimum cone sizes
- Certification of flaggers
- Haul routes
- Valet operations
- Covered pedestrian walkways
- Signing for bike lane closures
- Use of temporary striping on overlay projects
- Minimum size of arrow boards on vehicles in short-term operations

1. *Phoenix City Code, Section 36-300: Official Traffic Barricade Manual. Contractors, utilities and other agencies are to abide by applicable Phoenix Ordinances when working in public ROW.*

2. *Manual on Uniform Traffic Control Devices, published by the U.S. Department of Transportation, Federal Highway Administration, as modified by the Arizona Supplement (Arizona law).*

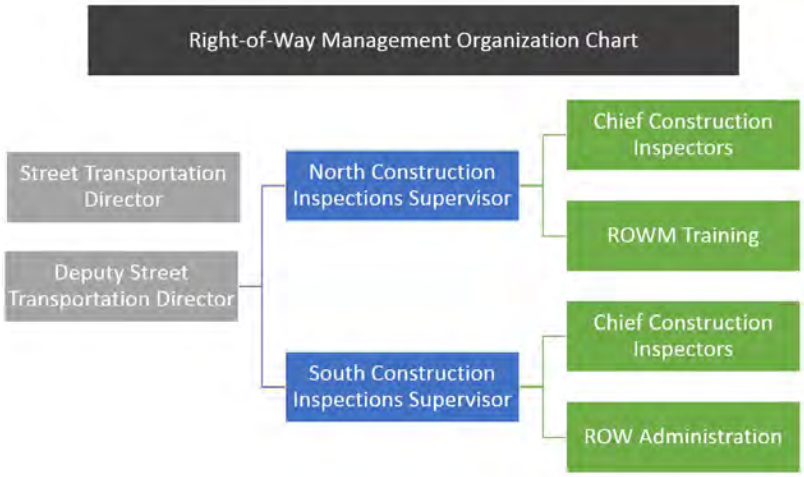

Other Features:

Agency Self-Training: Effective management of street ROW can only be sustained by a combined effort of managers, superintendents, foremen, or lead personnel of all agencies that work in the ROW. The TBM has been prepared to help managers properly train their staff as to which temporary traffic control methods work best on busy urban streets. It is incumbent upon agencies and contractors to familiarize and train those who supervise field crews to ensure that crews are very familiar with practices contained in both the TBM and the MUTCD.

Requesting Approval of New Devices: Given the constantly changing technology, the City encourages all participants to suggest new practices and products for consideration. However, new devices may not be used in Phoenix ROW before approval is granted. Requests for new product approval are to be sent to:

City of Phoenix
Attn: ROW Program Administrator
Street Transportation Department
1101 East Jefferson Street
Phoenix, AZ 85034

The City's ROW Program Administrator will evaluate proposed products as soon as practical and respond in writing within 90 days. The submittal must include:

- Federal Highway Administration approval to experiment, including progress reports
- Product to be used, including specifications
- Specific application for the use of the device
- Crashworthiness test information
- Any previous field testing of the device
- Documentation of other jurisdictions that have approved the device

Purpose of the Traffic Barricade Manual

The purpose of the TBM is to help ensure that during construction, maintenance, and event activities on City streets, reasonably safe conditions are sustained for motorists, bicyclists, pedestrians, transit riders, and workers. This edition of the TBM illustrates proven procedures that work well on different types of urban streets, including Major, Collector, and Local streets. When temporary traffic control is managed properly, it reduces congestion and confusion for the public. Each updated edition is written using the current MUTCD as a base standard, in addition to incorporating local practices that work best on our urban streets.

An additional goal of the TBM is to gain uniformity in implementing temporary traffic control in work zones or special events and promote the use of the most effective and least disruptive methodology. This TBM establishes uniform procedures that can be used in temporary traffic control zones for construction, maintenance, utility work, incident management, or special events. The provisions contained in this TBM are all in substantial compliance with the MUTCD Section 1A.07 and 1A.08, which reads as follows:

"The responsibility and authority for the design, placement, operation, maintenance, and uniformity of traffic control devices shall rest with the public agency or the official having jurisdiction."

The key prerequisite for optimizing traffic control involves applying techniques described in this TBM, including use of engineering judgment to tailor traffic control to best fit a given situation. Typical applications of approved devices and procedures are also illustrated.

The provisions established herein apply to all persons occupying space otherwise used for transportation and utilities within Phoenix public ROW. For events, the provisions apply to the event sponsor or promoter.

Emergencies and incidents overseen by City of Phoenix Police and Fire personnel such as vehicle crashes, hazardous waste emergencies, or other major occurrences often require immediate response without the opportunity to deploy temporary traffic control resources. Nevertheless, even these incidents require use of innovative and effective temporary traffic control strategies including police power, use of emergency vehicles with flashing lights, manual control of traffic, and/or flaggers. Flares and roll-up emergency signs are also commonly used. The longer the incident duration, the more consideration should be given to using established traffic control techniques, such as those prescribed in this Manual.

Chapter 1

Right of Way Management

Improved management of public ROW enhances traffic safety and mobility by minimizing unauthorized and improper street and sidewalk restrictions, and when they occur, minimizing duration of restrictions. The goal is to achieve high levels of compliance with temporary traffic control rules to ensure impact upon the traveling public is minimized without delaying projects.

I. WHAT IS RIGHT-OF-WAY (ROW)?

ROW is land that has been dedicated or purchased for use by the traveling public at large. The land is essentially in trust and is to be used for the public good rather than private gain. The Street Transportation Department is the administrating custodian of the City of Phoenix ROW and is charged with the responsibility of making sure it is operated in a manner that optimizes its safe use for the public. The Phoenix Police Department has authority over the ROW during emergencies.

II. WHY ARE RIGHT-OF-WAY MANAGEMENT PROCEDURES NECESSARY?

Improved management of ROW is essential. When compliance with the TBM declines, more violations of the TBM usually result, causing projects delays, higher costs, inconvenience, and potential impacts to the health, safety, and welfare of our citizens and visitors. Even though the Manual has always been thorough regarding when and how to restrict the ROW, an effective enforcement strategy has been utilized successfully in gaining compliance and protecting public safety.

Since September 2004, the City has operated under a more defined process for persons who want to reserve space in the right-of-way. Using the City of Phoenix's Temporary Restriction and Closure System (TRACS) over the past several years, we have had the ability to reserve space for users to coordinate work and events to minimize disruptions.

This emphasis on better management of the public ROW for everybody's benefit was unanimously approved by City Council on April 16, 2004 and added to City Code as Article XV on September 1, 2004. Under this Council-approved policy, the cost to secure a TRACS permit remains free of charge.

III. COMPONENTS OF ROW MANAGEMENT

Five key components of ROW Management have been identified and presented below:

1. ***Certification/ Training*** – Agencies wanting to set and/or remove temporary traffic control must learn proper procedures in a training program and become certified.
2. ***Permitting Right-of-Way*** – ROW Management issues and manages permits for all persons requesting use of City of Phoenix ROW.
3. ***Penalties for Non-performance (Civil Sanctions)*** – Fines can be assessed for Right of Way Management Program violations as stated in Phoenix City Code.
4. ***Parking Meter Hooding Fees*** – Hooding fees are implemented to encourage keeping parking meters in service for nearby businesses and government activities and to compensate the City's General Fund for lost revenues.
5. ***Authority to Impound Improper Devices*** – The City may remove/store unauthorized, abandoned, or improper traffic control devices.

IV. CERTIFICATION

Agencies or companies requesting to set up and/or take down traffic control devices **shall** obtain **certification** from the City Traffic Engineer every year and complete training through the City every two years (per Phoenix City Code 31-201 and 31-202). There are two types of certification, both requiring a training class offered by the City:

Blanket Certification: The City of Phoenix "Blanket Certification" is available for any agency or company to set **AND** remove signs and barricades in the ROW. It costs $750 annually (per agency not per trainee) to acquire the City of Phoenix training and Blanket Certification. Blanket Certification also requires successful completion of the American Traffic Safety Services Association (ATSSA) Certification at the Supervisory Level, or equivalent training as approved by the Phoenix ROW Management Program Administrator. To complete this three-part ATSSA Certification, contact ATSSA at 1-800-272-8772.

City Code: 31-201 Temporary traffic control device installation and removal certification: Any party wishing to install and remove temporary traffic control devices within the public ROW shall obtain a certification issued by the City Manager's designee to engage in such activities. The City Manager's designee may, in their sole discretion, issue a certification upon the applicant's satisfactory completion and annual submission of the following:

A. A fully completed application.

B. An application fee in the amount of seven hundred fifty dollars ($750). The application fee entitles the certificate holder to attend the City's training program at no additional cost, and in addition as space is available, to allow the attendance of the certificate holder's personnel at no additional cost.

C. Proof of insurance or an acceptable program of self-insurance for bodily injury and property damage liability in an amount required by the City Finance Department, Risk Management Division. All such insurance shall name the City as an additional insured and shall be maintained throughout the term of certification.

D. A certificate from the American Traffic Safety Services Association at the "Supervisory Level" or equivalent as determined by the City Manager's designee in their sole discretion.

E. An agreement to protect, indemnify, defend, and hold harmless the City for a claim for damage to a person or property that may be brought against the City because of applicant's activity conducted under the certification.

F. Proof of successful completion within the two years immediately preceding the application date or within one year of the application date of the ROW Management training program established and administered by the City Manager's designee related to the Traffic Barricade Manual and temporary traffic control devices.

Take-Down Certification: "Take-Down Certification" is available for any agency or company that **ONLY** wants to remove signs and barricades from the ROW (not set them up). At times, authority to simply remove signs/barricades is desirable because it can be done immediately following work shut down and save service calls by barricade attendant services. Take-Down Certification is required every two years with annual certification of $250/year.

City Code: 31-202 Temporary traffic control device removal only certification: Any party wishing to remove temporary traffic control devices within the public ROW shall obtain a certification issued by the City Manager to engage in such activities. The City Manager may, in their sole discretion, issue a certification upon the applicant's satisfactory completion and submission of the following:

A. A fully completed application.

B. An application fee in the amount of two hundred fifty dollars ($250). The application fee entitles the certificate holder to attend the City's training program at no additional cost, and in addition as space is available, to allow the attendance of the certificate holder's personnel at no additional cost.

C. Proof of insurance or an acceptable program of self-insurance for bodily injury and property damage liability in an amount required by the City Finance Department, Risk Management Division. All such insurance shall name the City as an additional insured and shall be maintained throughout the term of the certification.

D. An agreement to protect, indemnify, defend, and hold harmless the City for a claim for damage to a person or property that may be brought against the City because of applicant's activity conducted under the certification.

E. Proof of successful completion within the two years immediately preceding the application date or within one year of the application date of the right-of-way management training program established and administered by the City Manager's designee related to the Traffic Barricade Manual and temporary traffic control devices.

To register for training, call the ROW Management Office at 602-534-5369. **Certifications SHALL be renewed every year.**

Phoenix City Code authorizes taking measures necessary to preserve and protect use of the public ROW. This includes issuing civil sanctions for violating the TBM or stipulations of the TRACS Permit. The civil sanctions for violations are shown in *Table 5*. When serious violations of the TRACS permit occur, as determined by the Right of Way Management Program staff, additional penalties

may be authorized beyond the base civil sanctions including:

- Suspension of the TRACS permit up to five business days.
- Doubling of sanctions up to **$2,500/day** for continuing violations. Sanctions may double for each consecutive day a violation is observed up to a maximum of $2500. Pursuant to the violation in the penalty table. Continuing means the same violation observed on the next consecutive day in the same location by the same contractor.

Repetitive sanctions: Each calendar day may be considered a separate violation.

Impound of devices: ROW is not generally appropriate for storing devices and certainly unwarranted devices should not be left "active." If devices are improperly located such as to present a hazard or if device owners ignore requests to pick up devices in a timely manner, the Right Of Way Management Program staff may exercise its right to impound such devices. If the devices are impounded and stored by the City, the Owner of the devices may only be allowed to retrieve such devices from the City storage facilities following payment of a fee. The City may assess a fee to the Owner to recuperate its cost for retrieving and storing the devices in the City's possession.

Table 5 – Summary of Violations and Penalties

(PCC 31-204, adopted 10/21/2009)

Violation	Description	Civil Sanction
1	Any party's act, error, or omission within the right-of-way that creates an imminent risk of death or injury	$1,500
2	Any party that restricts the right-of-way without proper certification or a right-of-way use permit	$1,000
3	Any party that restricts the right-of-way during peak traffic hours without proper authorization, as such peak traffic hours and authorization are described in the Traffic Barricade Manual	$1,000
4	Any party that fails to correct or cure a violation of the Traffic Barricade Manual within the time period stated on the notice of violation	$1,000
5	Any party that restricts the right-of-way at an intersection with traffic signals and such party does not engage in any activity for a period of one continuous hour	$1,000
6	Any party that improperly closes a sidewalk or closes a sidewalk without proper certification or a right-of-way use permit	$500
7	Any holder of a right-of-way use permit that fails to comply with the conditions, restrictions, limits, times, or location of the right-of-way use permit	$500
8	Any party that fails to install advance warning signs or fails to install advance warning signs that comply with the Traffic Barricade Manual	$500
9	Any party that fails to install traffic barricades or channelizing devices or fails to install traffic barricades or channelizing devices that comply with the Traffic Barricade Manual	$500
10	Any party that fails to remove an advance warning sign leaving the sign facing traffic after the traffic restriction has been removed	$250
11	Any holder of a right-of-way use permit that fails to remove traffic control devices from right-of-way within twenty-four hours after right-of-way use permit expires	$250
12	Any party that fails to install and maintain traffic control devices as described in chapter eight of the Traffic Barricade Manual	$250
13	Any party that renders a bus stop inaccessible without relocating it or taking other actions that maintain access	$250

Chapter 2

TRACS Permits

Streets and sidewalks are important public assets and can only be taken out of service when deemed appropriate by the City. Individuals, companies or agencies needing to use the ROW temporarily are required to secure a Temporary Restrictions and Closures (TRACS) Permit, which will authorize them to restrict the City of Phoenix's ROW. The permit process enables the City to:

- **Ensure** the ROW is reserved (except emergencies) for the permitted party's sole use, and take that loss of functionality into consideration when assessing other nearby permit requests.
- **Provide** appropriate advance notification to others who may be adversely affected by the TRACS restrictions.
- **Monitor** the quality of all temporary ROW restrictions and identify any improvements needed for safety and operations.

The TRACS permit system was designed so that:

- Permits can be requested and approved electronically, contingent upon the applicant complying with ALL provisions of the TBM and any other special requirements that may apply.
- Local Street and short-duration (less than one hour) restrictions during non-peak hours are typically exempt from the TRACS permitting process. Some projects on Local Streets may require a TRACS permit at the discretion of the Construction Inspections Supervisor, such as when a partial closure may impose an undue hardship on a neighborhood, school, or public facility such as a fire station. Other exceptions include complete closures, downtown restrictions and other rare circumstances. Additionally, a TRACS permit may be required when prior poor performance by a company or agency indicates a need for special oversight.

I. WHO NEEDS A TRACS PERMIT?

All persons, contractors, utility companies, event promoters, and other agencies, including City Departments, ***shall*** obtain a TRACS permit if they are restricting access (partial or complete closures) on all public Arterial (Major) or Collector streets. TRACS permits are also required for complete closures of Local Streets, sidewalks, bike lanes and alleys, except as noted earlier in this chapter. ROW Inspectors may require a TRACS permit for a complete closure of a residential alley. The permit authorizes the restriction of the street, sidewalk, or any part of the public right-of-way, but does not completely guarantee the requester exclusive rights to occupy a particular portion of the public ROW. Weather, emergencies, incidents, or other projects and special events may require temporary

restriction or suspension of activities; however, the City will make every effort to coordinate activities and reserve the space for permitted activities.

Requests for TRACS permits shall conform to regulations outlined in this Manual, as well as in the "Special Traffic Regulations" or "Downtown District Special Provisions" listed in the City Project Specifications or Permit. Deviation (other than emergencies) from those regulations shall have the prior approval of the Right-of Way Management Construction Inspections Supervisor.

The City reserves the right to require a TRACS permit for any planned work or event in the ROW.

II. HOW TO OBTAIN A TRACS PERMIT

In most cases, TRACS permits should be obtained through the following representatives in lieu of going directly through the Right of Way Management Office:

Special Events – The assigned Event Coordinator

Valet – The adjacent Property Owner or other Requestor

City Projects – The assigned City Inspector

County Projects – The County Project Supervisor

ADOT Projects – The ADOT Resident Engineer

Permits for projects not listed in the categories above may be obtained by contacting the Right of Way Management Program at:

Phone: 602-262-6235; Fax: 602-256-3154; E-Mail: RMP@Phoenix.gov.

Figure 1 illustrates the TRACS application to obtain a TRACS permit.

Figure 1 – Sample TRACS Application

TRACS Permit Application
CONTRACTOR CONSTRUCTION

USE TAB TO FILL OUT FORM

48-Hour Advance Notice Required for Partial Closures & 72-Hours For Full Closures
Right-of-Way Closure Line: 602.262.6235 Fax: 602.256.3154 ♦ email: rmp@phoenix.gov

Start Date: End Date:	What street is this restriction on?
From Street:	To Street:
COP PDD Civil Permit numbers:	
COP Department project/ permit numbers:	Previous TRACS permit :
Will the work site go through a signalized intersection? Yes ☐ Will traffic signal operations need to be modified? Yes ☐ Will there be signal timing changes for this restriction? Yes ☐ 72 –hour notification needed/Requested by city inspector only	Is this restriction on the LightRail track? Yes ☐ 7 feet from center of the track? Yes ☐ 3 feet from the guideway curbing? Yes ☐ 10 feet from the overhead wire Yes ☐ Working over the overhead wire? Yes ☐ Boring underneath the guideway? Yes ☐
Will Police be on site for this project? Yes ☐ Will there be a Speed Reduction for this project? Yes☐ HOTLINE NUMBER:	Contact LRT first before proceeding 602-652-5060
GOVERNMENT CONTACT OVERSEEING PROJECT/ JOBSITE (if applicable) Submit TRACS applications to the ASSIGNED CITY INSPECTOR/ PROJECT MANAGER/	
City Contact/ Inspector & Phone:	Email:
GENERAL CONTRACTOR / GOVERNMENT AGENCY INFORMATION: Company/Organization/ Government Agency hiring Contractor to do work	
General Contractor/ Government Agency:	
Contact & Phone:	Email:
COMPANY CONTACT INFORMATION (Company/ Contractor performing/ working/ encroaching ROW)	
Sub-Contractor/ Company performing work:	
Contact & phone:	Email:
CERTIFIED BARRICADE COMPANY :	

EMERGENCY ACCESS MAINTAINED? Yes ☐ No ☐ --- If street is completely closed, can ER vehicles drive through?

BARRICADE HOURS FOR TRACS PERMIT – What time are the barricades being setup and taken down daily?
Note: 24-hour setup only setup time on first day of restriction and takedown time on last day of restriction.

Mon-Fri Daytime Hours:	Weekend Hours:	Nighttime Hours:
Work Type for this project:		

STREET RESTRICTIONS: Review TRACS Abbreviations for clarification on what is restricted for this permit.
(include directions restricted, bus stops, edge lines, shoulder work, bike lanes, left & right turn lanes & LRT slip lanes)

Will restriction be setup 24 hours through duration of this permit? Yes ☐ No ☐	Bike Lanes restricted? Yes ☐ Direction : NB ☐ EB ☐ SB ☐ WB ☐ Bus Bay relocation? Yes ☐ Where:
Lanes Restricted:	
Lanes Maintained:	
Misc Info:	

SIDEWALK RESTRICTIONS: *(include detailed info on pedestrian detour route including any crosswalk restrictions)*

Will restriction be setup 24 hours through duration of this permit? Yes ☐ No ☐	Side of street that the sidewalk is being restricted: N ☐ E ☐ S ☐ W ☐ Crosswalks restricted? Yes ☐ Which side? : N ☐ E ☐ S ☐ W ☐ How many crosswalk legs are maintained?

Pedestrian Access maintained on same side of street with 36" ADA accessible path on all pedestrian walkways:
In Street: ☐ Explain: Out of Street: ☐ Explain:

Sidewalk Closed: ☐ Explain Ped Detour Route:

DOWNTOWN PHOENX PARKING METERS: *(Parking Meters are requested M-F 6am or 2pm only)* Excluding City Holidays

What is the reservation for parking meters for?

Meter Hooding Date:	Meter Hooding Time: 6:00 a.m. ☐ 2:00 p.m. ☐
Meter Unhooding Date:	Meter Unhooding Time: 6:00 a.m. ☐ 2:00 p.m. ☐

Meters to Hood: *(must provide meter numbers):*

Hood Color: *Yellow Hoods*: Commercial Vehicle Parking Only: ☐ *Red Hoods*: No Parking: ☐

III. REGULATIONS THAT GOVERN TRACS PERMITTING

TRACS permits require up to five different types of regulations:

A. Advance Notice Regulations

B. Nighttime Regulations

C. Citywide General Regulations

D. Downtown Special Regulations

E. Contractual Special Regulations

Advance notice is required for partial- or full-street ROW closures to notify persons and businesses that might be adversely affected. This also allows the Permit Holder ample time to coordinate activities surrounding the closure in a manner that would result in the least impact. Additionally, citywide requirements also apply, including special requirements for work performed in the downtown area. Lastly, special regulations may be imposed as a special condition for the issuance of the TRACS permit (stipulations).

A. Advance Notice Regulations

Providing advance notice of restricting public ROW is not just a courtesy, but is required to enable effective notification of transit, emergency personnel, and others affected. Permits will NOT be issued without the minimum required advance notice, except under emergency conditions. Emergency repair work requires urgent action, which eliminates the opportunity to comply with advance notice requirements. Even in emergencies, it is imperative that the street or sidewalk restriction be called in to ROW Management Program staff as soon as practical.

Call (602) 262-6235 in case of emergency to report street or sidewalk closures:

Business hours:	6:30 a.m. to 3:30 p.m.
Non-business hours:	Nights and Weekends

The minimum advance notice to ROW Management is contingent upon the classification of the street(s) and the type of restriction or closure. The following advance notification requirements provide the number of hours or days (excluding holidays and weekends) of advance notice needed. This advance notice can be completed with a TRACS permit application or by conducting a pre-construction meeting with ROW Management staff:

Table 6 – Minimum Advance Notice for Restrictions/Closures

Type of Facility	Notice to ROW Management Staff
Full closure of an Arterial or Collector street	10 days
Partial closure of an Arterial or Collector street	48 hours
Work affecting traffic near a traffic signal	48 hours
Work affecting bus/transit/rail stops	48 hours
Work affecting residential alleys*	72 hours
Work affecting commercial alleys	
Outside of Downtown*	24 hours
Downtown	48 hours

**Does not require TRACS permit application. Requires advance notice to Public Works.*

Work that will be performed near a traffic signal must be coordinated with the City's Traffic Signal Shop. Activities conducted adjacent to a transit stop should be coordinated with Valley Metro Bus or Rail, while work in the alleys must be coordinated with the City of Phoenix Public Works Department - Solid Waste Division. Provided below are telephone numbers for the entities identified above:

Signal Shop	(602) 262-6021
Transit Stops	(602) 464-5741
Solid Waste	(602) 262-7251
Valley Metro Rail	(602) 253-5000

Applicants seeking a permit for commercial alley closures will be required to coordinate with tenants adjacent to the alley prior to applying for the permit. The agencies identified above should always be contacted to determine whether or not the proposed work activity would adversely impact their facilities or activities prior to seeking a TRACS permit.

The ROW Management Program staff reserves the right to deny TRACS permits at any time, if in its judgment such traffic restrictions could result in an unwarranted or intolerable congestion/delays, major public inconvenience, or safety concerns. Work restricting traffic downtown, or on other high-volume Arterial streets is usually permitted during nights and weekends, as long as the work does not adversely impact other events and work activities.

B. Nighttime Regulations

To minimize disruption to traffic, crews may be requested to work at night during off-peak hours. In this case, an after-hours permit may be required to authorize work in residential areas. Permits may be granted for up to 30 days for hours including nights, weekends, and holidays and are issued under Phoenix City Code 23-14 for building and roadway construction by the Planning and Development and Street Transportation departments, respectively. The purpose of the permits is to authorize work yet minimize loud and disturbing noises in residential areas due to construction or maintenance activities.

C. Citywide Regulations

Except during emergencies when pre-approved in the contract or by the ROW Management Program office, nine (9) general traffic regulations apply during traffic restrictions:

1. Traffic restrictions ***are not*** permitted on Arterial/Collector streets during peak traffic hours (***6:00 a.m. to 8:30 a.m. and 4:00 p.m. to 6:30 p.m.*** weekdays).
2. **Minimum number of travel lanes** to be open to through traffic:
   a. If more than four lanes exist:..... Two will be open each way;
   b. If four or less lanes exist: ..... One will be open each way
   c. On one-way streets: ..... Two lanes open
3. **Special requirements for work near signals:** Construction near signalized intersections will have greater impact on traffic congestion; therefore, special consideration is needed. It is imperative that restrictions within 300 feet of traffic signals be minimized, including limiting their duration. At multi-lane signals, restrictions often require that a left-turn lane be converted to a through lane to add through traffic capacity. Travel lane closures are normally allowed only during off-peak hours. Whenever traffic in any one direction at a multi-lane signalized intersection is restricted to only one through lane, the Permit Holder shall provide a uniformed Police Officer to manually allocate available "green time" unless otherwise approved by City staff (See Chapter 5, Section 2 for more information).
4. **Quality requirements for traffic lanes:** Travel lanes (vehicular or bike) **shall** be considered "satisfactory" when paved with hot- or cold-mix asphalt. Where existing pavement is removed temporarily, a travel lane is not be considered "satisfactory" for through traffic unless graded reasonably smooth and maintained with approved, dust-free measures.
5. **Local access requirements:** Local access shall be maintained to all properties on all streets (Arterial, Collector, and Local) at all possible times. When local access cannot be maintained, it is the responsibility of the Permit Holder to notify the affected property owners, residents, or tenants a minimum of ***72 hours*** in advance. The reasons for the closures and alternate access accommodations shall be communicated to all affected property owners or tenants. Full, unimpeded access should be restored as soon as practical.
6. **Special access requirements for public facilities:** Fire stations, police stations, hospitals, transit facilities, and schools shall be maintained at all times. When access restrictions are necessary, the Permit Holder shall coordinate such access restrictions with the responsible person in charge of the affected facility.
7. **Special pedestrian accommodations:** Access to sidewalks (paved or unpaved), marked and unmarked crosswalks (especially school crosswalks), and bus stops shall be maintained open in a safe, usable condition as detailed in Chapter 3 of this ***TBM***, and/or in the **2010 ADA Standards for Accessible Design**. In the rare event when their function cannot be retained, ***it is the responsibility of the applicant*** to first prove that closure is necessary, and secondly, to locate a safe and reasonable alternative walkway that is fully accessible to a sight-impaired person or pedestrian in a wheelchair. Generally, this requires the Permit Holder to prepare and maintain a detour route before the day of the restriction to provide clean, safe, and accessible conditions for the duration of the work.

8. **Requirements to coordinate with special events:** Extensive coordination efforts are required for major events (e.g., parades, marathons, Fabulous Phoenix 4th of July) when they conflict with construction and maintenance activities.
9. **Requirements during holiday season:** During the time between the Friday after Thanksgiving through January 1, construction/maintenance activities are minimized on Arterial and Collector Streets to reduce traffic congestion near large retail shopping centers citywide. Traffic restrictions that would interfere with traffic flow near retail shopping areas and on high-volume streets are normally denied, but when crucial, Right of Way Management Program staff can pre-approve restrictions. Those requesting permits are encouraged to plan around this time period, since restrictions will rarely be approved.

Coordination with other Permit Holders ***must*** occur between projects to ensure compatibility of temporary traffic control systems and avoid duplicate signing.

D. Special Downtown Requirements

Given the growing amount of development and special events occurring in Downtown Phoenix, unique additional protective requirements apply to ensure coordination with businesses, residents, events, and other projects.

The City of Phoenix Downtown District area is bounded by Buckeye Road to the south; McDowell Road to the north; Black Canyon Freeway (I-17) to the west; and Papago Freeway (I-10) to the east. The map in *Figure 2* illustrates the general limits of the Downtown District.

Figure 2 – Downtown Right of Way Management Area Map

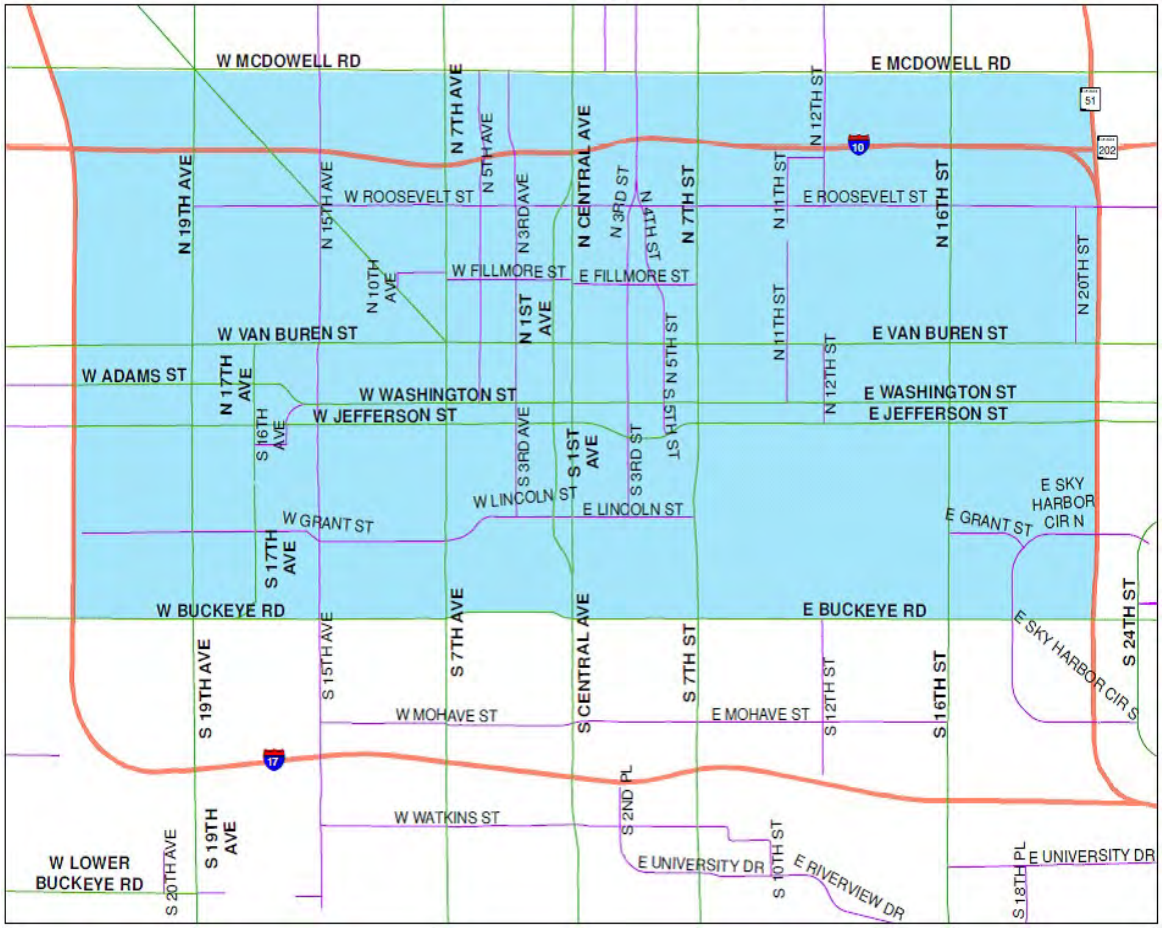

Except during emergencies or when provided for in the "General Traffic Regulations" or given prior approval from the Street Transportation ROW Management Program Section, the following minimum traffic control requirements shall prevail for all traffic restrictions in the Downtown District:

- Traffic restrictions are not permitted on Arterial or Collector streets during the morning peak hour and ending sooner during the evening peak hours (6:00 a.m. to 8:30 a.m. and 4:00 p.m. to 6:30 p.m.).
- All street closures in Downtown Phoenix **require** TRACS permits.
- A minimum of forty-eight (48) hours' notice is required for partial closure of commercial alleys in the Downtown District. These facilities provide critical services to the adjacent land uses. Eliminating access may cause major disruption to critical downtown business activities. Prior to the restriction, the applicant shall coordinate with adjacent tenants. Suitable arrangements for alley service shall be made and coordinated with the Downtown Phoenix Partnership at 602-254-8696 and the Downtown Police Unit at 602-534-6432.
- A minimum of 72 hours notice is required for complete closure of a commercial alley.

E. Contractual Special Regulations

Other special regulations may apply when imposed either through the contract or as part of the TRACS process.

IV. TEMPORARY TRAFFIC CONTROL PLANS: WHEN ARE THEY REQUIRED?

Good, effective traffic control requires complete and careful planning. Prepared ahead of time, Traffic Control Plans (TCPs) can make construction, maintenance, and special events more efficient and safe. A TCP may be required depending on the complexity of the temporary traffic control needed, the type of restriction requested, the type of traffic that exists, and the overall impact on adjacent land use.

On most minor projects, the typical illustrations contained in this TBM can be applied and constitute a pre-approved TCP. Special Traffic Regulations or Provisions may be incorporated into bid documents that enable contractors, and often times, City crews, to develop alternative TCPs that may be used, but only if the responsible agency determines the alternative TCP will result in at least as good of a result as those provided in the project plans or specifications. For maintenance/minor utility projects not requiring bidding, it is important that sufficient planning be given to selecting the best temporary traffic control system needed before occupying the temporary traffic control work zone. Additionally, when several work zone activities exist near each other, it is essential that advance coordination efforts take place between ALL projects to ensure that duplicate signing is not used and to ensure compatibility of temporary traffic control systems between projects.

The purpose of a *TCP* is to encourage proper planning as to the time of day, sequence of construction, degree of restriction required, and temporary traffic control needed. Well-thought-out advance planning can provide not only efficient and safe results, but also minimize impacts to traffic levels of service, provide access, and maintain mobility for all modes of travel.

TCPs may range in complexity from use of typical illustrations depicted in this Manual to a detailed site plan showing signing, striping, barricading, detours, pedestrian walkways, bike lanes, construction fences, and project phasing. In all cases, the required TCP needs to satisfactorily and responsibly address requirements of this TBM. For large or unusual projects, advance consultation and review during the planning/design phase is ***strongly encouraged*** to avoid delays. Pre-consultation also ensures that projects become a truly cooperative and partnered effort between those working in the ROW and those traveling in the ROW.

A TCP is usually required for long-term or complex projects such as detours and channelization for bridge construction, street restrictions for building construction walkways and fences, major utility construction, special events, and arterial street closures.

TCPs may be required for other projects and permits, as needed, at the discretion of the Project Inspector, ROW Management Program, and/or other City department officials.

Due to the nature of traffic operations along frontage roads and at or near freeway traffic interchanges, a TCP should be prepared for traffic restrictions on those facilities. **A permit from the Arizona Department of Transportation is typically required.**

V. HOW DO I OBTAIN A HAUL PERMIT?

A Haul Plan and Permit may be required under Chapter 36 of the Phoenix City Code to move large quantities of fill material (greater than 10,000 cubic yards, or if haul exceeds 20 days in length). Below is a checklist developed by the Planning and Development Department to guide contractors on this process.

A. Haul Plan Checklist

Figure 3 – Sample Haul Plan Checklist

City of Phoenix
PLANNING & DEVELOPMENT DEPARTMENT

Haul Plan
Checklist

KIVA #: _____ **Project Name:** _____

Reviewed By: _____ **Phone:** _____ **Date:** _____

Engineer: _____ **Phone:** _____

The purpose of this checklist is to offer comments on plan design for haul plans required for all hauls over 10,000 cubic yards and to set the minimum submittal requirements for Haul plans. The source of the Haul plan design policy is City Code Chapter 36.

This checklist serves to minimize redline comments on the check prints and to maintain consistency among plan reviewers on plans for hauls in excess of 10,000 cubic yards. Plan approval, issuing permits, and certain grading clearances depend on compliance with the comments made on the check prints and this checklist. The designer of record shall satisfy themselves of the completeness and accuracy of the design.

A completed checklist must be attached to the Haul plans when submitted for first review. The following Certification Statement must be signed by the Designer of record certifying that all applicable requirements on this checklist have been met.

CERTIFICATION

I CERTIFY THAT THE REFERENCED PLANS COMPLY WITH ALL APPLICABLE CITY ORDINANCES AND STANDARDS, INCLUDING FEDERAL, STATE AND COUNTY REQUIREMENTS AND REGULATIONS. IN ADDITION, I CERTIFY THAT THIS CHECKLIST HAS BEEN COMPLETED ENSURING ALL ITEMS LISTED ARE PROPERLY ADDRESSED. I UNDERSTAND THAT IF I FAIL TO ADDRESS ALL APPLICABLE ITEMS IN THIS CHECKLIST, THE PLANS MAY BE IMMEDIATELY RETURNED TO ME WITHOUT ANY FORMAL REVIEW BEING PERFORMED.

Designer's Name: _____

Designer's Signature: _____ **Date:** _____

Please complete and return this checklist and the check prints with each submittal. Discussion of redline comments on plans or this checklist should be directed to the plan reviewer listed above.

Engineer of record **(DES)** must fill out all boxes in the first column as either [√] (Addressed) or [N/A] (Not Applicable).

Civil plan reviewer **(RVW)** shall check the second column as [X] (Required) when requirements have not been properly addressed.

REQUIRED SUBMITTALS

DES RVW
☐ ☐ Plan sheets shall be 24" X 36"; submit five (5) sets of Haul plans and a completed and signed Grading and Drainage Plan Checklist.

This publication can be made available in alternate formats (Braille, large print or digital media) upon request. Contact Planning & Development at (602) 262-7811 voice or (602) 534-5500 TTY.

S:\Haul Plan, Checklist.doc
WEB/dsd_trt_pdf_00049

TRT/DOC/00049
126-63D Rev. 6/13

City of Phoenix Planning & Development Department
Haul Plan, Checklist – Page 2 of 4

TRT/DOC/00049

GENERAL REQUIREMENTS

A haul plan and permit are required if 10,000 cubic yards or more of material is moved or if haul exceeds 20 days in length.

DES RVW

☐ ☐ Provide a vicinity map.

☐ ☐ Property the owner's name, address and phone number (for both source and disposal sites.)

☐ ☐ Provide the contractor's name, address and phone number.

☐ ☐ Provide a north arrow and bar scale; scale shall not be smaller than 1" - 40'.

☐ ☐ Provide the address of the source and disposal sites. In the event of more than one source or disposal site request, a separate Haul Plan for each site will be required. Each disposal site requires a separate Grading and Drainage Plan and Permit.

☐ ☐ Provide a legend identifying grades or symbols.

☐ ☐ Provide dates and hours haul operations will begin and end.

☐ ☐ Provide the amount of haul in cubic yards.

☐ ☐ Provide approval lines as follows:

_____ _____
Right-Of-Way Manager **Date**

☐ ☐ Upon reviewer's request, provide original and five (5) blue line prints to the City "for signature."

GENERAL NOTES:

☐ ☐ A Haul Permit is required under Chapter 36 of the Phoenix City Code.

☐ ☐ Haul Permits must be obtained prior to or concurrently with the Grading and Drainage Permit.

☐ ☐ Excavating Contractor must give location for wasting excess excavation and a letter from the owner giving permission for dumping. The dumping site will require a Grading and Drainage Permit. If a City of Phoenix landfill is to be utilized, dependent on the landfill to be used, a per ton rate will be assessed. Information/permits can be obtained through Solid Waste Management, telephone (602) 262-7251.

☐ ☐ Street Transportation Right-Of-Way Management Section shall be notified 48 hours before any hauling begins. Contact the Right-Of-Way Management Section at (602) 262-6235.

☐ ☐ An approved Haul Plan shall be on the job site at all times. Deviations from the plan must be preceded by an approved plan revision.

☐ ☐ Traffic control measures shown shall conform to the latest edition of the City of Phoenix Barricade Manual and the Arizona Supplement to the Manual on Uniform Traffic Control Devices 2009 Edition..

☐ ☐ The City of Phoenix Police Department enforces laws regulating the operation of commercial vehicles. This includes enforcement of federal, state, county, and local laws and ordinances. Questions regarding Commercial Vehicle Enforcement may be directed to the Commercial Vehicle Enforcement Supervisor at (602) 495-7813 (Traffic Bureau South) or (602) 495-6784 (Traffic Bureau North).

☐ ☐ Streets and sidewalk sweeping will be utilized as necessary to ensure that streets and sidewalks will be kept clean and safe, as directed by the Planning & Development and/or Street Transportation inspector.

☐ ☐ Periodic and final inspections will identify if the need for street repairs are required. Any damage determined to be the result of the haul will be paid by the contractor.

DES RVW

☐ ☐ Contractor shall submit a weekly report to the Street Transportation Department Right-Of-Way

City of Phoenix Planning & Development Department
Haul Plan, Checklist – Page 3 of 4 TRT/DOC/00049

Management listing all complaints including the name, address, phone number of the complainant, time and date the complaint was received and what action was taken to mitigate the complaint.

☐ ☐ Contractor is responsible to resolve all complaints. If complaints are unresolved, the contractor may be required to revise the Haul Plan or the permit may be revoked as directed by Street Transportation Right-Of-Way Manager.

☐ ☐ Tracking onto city streets is prohibited and shall be prevented. Contractor shall provide an ABC all weather surface at the point trucks exit the sites. If the ABC is not adequate in the opinion of the approval agents, AC will be installed with a tire wash area as required. The truck's tires will be washed clean prior to entering City streets. Tire wash area shall be drained, flushed, and re-filled as required to prevent tracking dirt onto City streets.

☐ ☐ Water trucks shall be provided to prevent dust on job and all trucks shall have tarps to prevent blowing dust from trucks. Sweeper shall be provided as per City of Phoenix request or as deemed necessary.

☐ ☐ Trucks will be checked for excess dirt on trailers and/or side-boards and cleaned before leaving the job site so as to prevent spilling dirt on streets.

Traffic Control Details to be Shown on Plan

☐ ☐ Show the access to the site.

☐ ☐ Provide the days and hours of operation.

☐ ☐ Night hauls require special submittal and approval. City Code Sections 23-14(h) and (i) authorize issuance of permits for extended construction work hours beyond 6:00 p.m., if certain conditions are met. The Planning & Development Department issues private development permits.

☐ ☐ Provide the number of trucks to be used.

☐ ☐ Provide the frequency of trucks entering and leaving the site.

☐ ☐ Show the primary and alternate haul routes to be used to and from the source and disposal sites.

☐ ☐ Show traffic control measures utilized including police officers, flagmen, signs, barricades, detours, etc.

☐ ☐ Provide a written plan of action detailing methods the contractor will use to prevent tracking dirt onto City streets. Including, but not limited to:

DES RVW

☐ ☐ A minimum of 300 feet of temporary asphalt installed and maintained clean at each access point to City streets.

☐ ☐ Provide continuous clean-up of all streets used for hauling.

☐ ☐ Inspect and repair street damage on the route caused by the haul.

☐ ☐ Methods, other than tire washing, that the contractor proposes to use to prevent tracking.

ADDITIONAL INFORMATION

☐ ☐ Payment of a $500.00 cash bond is required per Ordinance G-2817. The bond is required to secure the cost of the removal of any spillage in the City Right-of-Way. The bond will be returned after project acceptance upon the recommendation of the inspector.

☐ ☐ Permit fees are required per Ordinance G-2817 and will be based on the amount of material to be hauled.

☐ ☐ A portion of the haul route for this development is within STATE, COUNTY, or OTHER CITY jurisdiction and is subject to review and approval by that public agency.

DES RVW

☐ ☐ A maximum of 30 trucks per route will be permitted during daytime haul operations (one truck exiting

City of Phoenix Planning & Development Department
Haul Plan, Checklist – Page 4 of 4 TRT/DOC/00049

every two minutes) with a maximum of 60 trucks allowed per route during night-time operations (one truck exiting every minute).

☐ ☐ All plans revised after the original approval shall be resubmitted for review. The nature of the revision must also be called out on the cover sheet and on the sheet(s) to be revised. The revision number itself shall consist of a numeral within a triangle. △

☐ ☐ Discussion of redline comments on plans or in this checklist should be directed to the plan reviewer.

APPROVAL PROCESS:
The following is the process for getting the haul plan permitted:

☐ ☐ The "hauler" will submit five (5) copies of the haul plan to the Street Transportation – Right Of way Management Section. Office location and hours of operation is, 1101 E. Jefferson Street, Phoenix, AZ, Monday thru Friday 7:30 A.M. to 3:30 P.M. Main entrance is located in the north side of the building.

Streets will review the plan and call the hauler to pick up. The hauler will receive two approved copies from Street Transportation.

☐ ☐ The hauler will bring two approved plan sets to Planning & Development Department - Counter 8 on the second floor of Phoenix City Hall located at 200 W. Washington Street, Phoenix, AZ., for permitting.

VI. HOW DO I OBTAIN A VALET PERMIT?

Valet Parking is defined as the operation of a Valet Parking Service that accepts possession of a vehicle within the ROW for the purpose of parking a vehicle for the operator and/or retrieving a parked vehicle and returning it to the operator within the ROW, regardless of whether a fee is charged.

A. Application Requirements

- Valet applications must include the names, addresses, emails, and telephone numbers of the applicant, adjacent property owner/lessee, and the valet company.

B. Valet Operation Requirements

- A Traffic Control Plan and a Valet Parking Plan shall be submitted for review ten (10) business days prior to commencement of valet operations. The Valet Parking Plan provides a written description and aerial plan of the valet station and the valet route plan to the vehicle storage location. This plan shall include placement of directional signs to the valet service and service stand/station location for drop-off and pick-up activities; this plan shall also include the hours of operation.
- All traffic control devices used for Valet Operation shall meet City standards as defined in this Manual.
- When valet operations are proposed during the planning and design phase, the Street Transportation Department must review and approve locations.
- All valet operations must be ADA-accessible.
- To operate valet in City ROW, the valet company must have current proof of insurance per City requirements.
- Some valet operations may require an on-site off-duty Phoenix Police Officer.
- If the valet operations require parking meters to be taken out of service, the applicant will be responsible for all associated hooding fees per City ordinance.

- Once Traffic Control and Valet Parking plans are submitted, an on-site meeting with the applicant and the area Right-of-Way inspector will be scheduled by the ROW Administrator.
- Valet operations that take place entirely on private property will not be reviewed by the Street Transportation Department.

An approved temporary right-of-way use permit (TRACS) will be issued to the Valet provider when all permit and plan applications are deemed suitable.

VII. PARKING METERS

The Permit Holder shall keep metered parking spaces functional and open for parking at all practical times. When parking meters must be hooded or removed, the Permit Holder shall notify the appropriate City Project Inspector who in turn, will notify the Street Transportation Department.

The Street Transportation staff responsively hoods/removes meters when warranted, and when doing so facilitates the work. To minimize potential damage/theft to meters, there are times when meter heads may need to be removed. Any posts damaged during construction shall be the responsibility of the Permit Holder to repair or replace at his/her expense. Other parking meter post removals, relocations, or installations shall be done by the Permit Holder as provided for in the plans, or as directed by the Parking Meter Supervisor. Where required, the Street Transportation Department will provide parking meter posts.

To request taking parking meters out of service, a minimum 48-hour advance notice is required to the ROW Management Program office at (602) 262-6235.

A party seeking to take a parking meter out of service to reserve curb space shall request a TRACS permit. This request is to include justification to the **ROW Administrator** stating the designated purpose and time requested. Currently, the fee to hood meters is $35 per city block of meters, with an additional charge of $10 per meter per day for the duration of the project meters will be taken out of service. The Permit Holder can cancel their application if they contact the ROW Management Program office at least 24 hours prior to meter hooding to avoid being billed. **Without proper cancellation, Permit Holders will be billed for reserved meters even if they do not end up using the metered space.**

Figure 4 – Valet Application

STREET TRANSPORATION DEPARTMENT – TRAFFIC SERVICES DIVI
RIGHT-OF-WAY MANAGEMENT
1101 E. Jefferson St Phoenix, Arizona 85034
Phone: (602) 262-6235 - **Fax:** (602) 256.3154 – Email: rmp@phoenix.gov

Valet Application

Street Restrictions and Parking Meter Hooding

Use this form for all Valet Companies that are staging in the COP row,
Fill in completely and accurately.
A TRACS permit will be processed depending on the information of this form.

Event name for valet	
Valet company name –	Contact ROW 602-262-6235 if valet company is not registered— Further requirements needed prior to new valet companies being permitted and approved
Contact, email and address of valet company	
Dates & times of valet event	
Name of business hiring valet services:	
Contact, email and address of business hiring valet	
Authorized barricade company name for set-up and take-down	
Time & date for meter hoodings 6AM and 2PM are the only choices, weekends and holidays not included	
Meter numbers to be hooded: Applicant MUST provide ALL meter numbers to be hooded Yellow: commercial vehicle parking Red: No parking	
Valet Staging location:	Street Name:
	Between streets:
	Exact address:
Attach Insurance Documents and Map To and From Parking Location Send to: 1101 E Jefferson St Phoenix, AZ 85034	General Liability Insurance: YES: Workman's Compensation: YES: City of Phoenix listed as an Additional Insured: YES:

PLEASE ATTACH MAP OF PARKING LOCATION TO AND FROM

Chapter 3

Accommodating Pedestrian and Bicyclist Safety

Proper advanced planning for pedestrian and bicyclist movement near temporary work zones is as important as planning for vehicular traffic. It is particularly important that any time pedestrian or bicyclist services will be affected (e.g., transit stops, access, bike lanes, or sidewalks) by a project or special event, a Contractor or crew performing the work give full consideration to the adverse impacts their work may cause. A goal of the City of Phoenix is to minimize adverse impacts to pedestrian and bicyclist facilities. This requires proper planning to preserve as much service as practical. When service requires disruption, alternative but practical service should be provided. Cognitive, mobility, or visually impaired pedestrians require additional planning and accommodations.

I. PEDESTRIAN CONSIDERATIONS

Except during emergencies, pedestrian service should be fully preserved at every crosswalk (marked or unmarked) and other facilities intended for use by pedestrians, unless reasonable alternatives are provided. During temporary traffic control work zones, the facilities must be kept safe and usable by the Permit Holder at all times, unless the City gives ***prior*** approval. Any time temporary disruptions of pedestrians are required, those planning the activity must provide temporary accommodation of pedestrians that meet the satisfaction of local, state, and federal requirements.

Temporary traffic control work zones that affect normal pedestrian flow should provide the most effective ways of maintaining access to local businesses, facilities, bus stops, and crosswalks. The provisions for protection of pedestrian service outlined in this TBM are applicable to all persons doing work that influences pedestrian facilities (sidewalks or marked/unmarked crosswalks). The TBM offers six fundamental principles for successfully accommodating pedestrians through work zones as follows:

1. Traffic and pedestrian safety must be an integral and high-priority element in every project, from planning through design and construction.
2. Pedestrian and traffic movements should be inhibited as little as practical, and planned to reduce exposure to potential hazards.
3. Pedestrians and motorists should be guided in a clear and positive manner while approaching, traversing, and leaving work zones.
4. Routine inspection of traffic control devices must be performed.

5. Personnel must be adequately trained in the proper management of pedestrian and traffic control, so they are qualified to make work zone safety decisions in the selection, placement, and maintenance of traffic control devices.
6. Pedestrian paths through the work zones should replicate as nearly as practical the elements of the existing path and be accessible to people using mobility devices like wheelchairs and those with limited sight.

Where the full pedestrian facility cannot be kept functional, it is essential that a clearly defined accessible path be developed at a minimum width of 36 inches. When it is not practical to maintain a minimum width of 60 inches throughout the entire length of the pedestrian pathway, a 60 x 60-inch passing space should be provided at least every 200 feet to allow individuals in wheelchairs to pass. Accordingly, special care is important in placing traffic control devices and other equipment/material. If a 36-inch clear walkable surface cannot be kept clear, it is not considered functional. On the rare occasion when it is required to take sidewalks out of service, alternative and accessible provisions must be made. The only exception to this is on the rare occasion when a walkway has to be ***totally*** closed for safety reasons. Consequently, accommodations must be made for businesses and transit stops that require pedestrian access at or near the closure. Reference Americans with Disabilities Act Accessibility Guidelines for Buildings and Facilities (ADAAG) and Chapter 6, Sections 6D.01 and 6D.02 of the MUTCD for additional information.

When a temporary work zone requires the closing of pedestrian facilities such as marked or unmarked crosswalks or walkways, provisions shall be made in advance by the Permit Holder to provide fully accessible, alternate temporary walkways that direct pedestrians through a reasonably safe, usable, and convenient route. The geometry and alignment of the facility should meet the applicable requirements of the ADAAG. Anyone requesting a complete or partial walkway closure on one side of the street must first accommodate pedestrians on accessible alternative paths on the same side of the street to prevent:

- Pedestrians from having to cross streets twice
- Disruption of transit services
- Interference with business accesses

Temporary walkways can be designated using portions of the existing sidewalk, or on rare occasions, in the adjacent parking lane if conditions and capacity permit. If a travel lane is authorized, the walkway should be properly delineated. See *Figure 6* for an example.

Figure 5 – Sidewalk Diversion Out-of-Street

Figure 6 – Sidewalk Diversion In-Street

If walkway closures are necessary, the alternative provisions must provide pedestrians with a suitable path consistent with ADAAG guidelines. The facilities should only be taken out of service for the minimum time necessary.

Additionally, the following actions need to be taken:

- Walkways shall always be clearly identified, wheelchair usable, and shielded from motor vehicle traffic. A smooth, continuous hard surface shall be provided throughout the entire length of the temporary pedestrian facility. There should be no curbs or abrupt changes in grade or terrain that could cause pedestrians to trip or serve as a barrier to wheelchair use.
- Unless a covered walkway or construction fence is required, barricades, cones, and signs may be used, as deemed appropriate. A continuous detectable edging on at least one side should be provided throughout the length of the facility such that pedestrians using a cane can follow it. The upper surface of the continuous barricade must be smooth and suitable for hand trailing. For temporary walkways, see *Figures 5 and 6 on pages 24 and 25.*
- When pedestrian paths are redirected on the same side of the street, the "PEDESTRIAN" sign, with an appropriate direction arrow, shall be used to direct pedestrians to the alternate walkway.

When pedestrian paths are being maintained in advance of a full closure, the "SIDEWALK CLOSED AHEAD" sign shall be placed at the appropriate end(s) of the block where pedestrians have the last opportunity to use a crosswalk to cross the street. Special care shall be taken to place the sign so it is prominently visible, yet leaves the required 36-inch minimum width. Additionally, reasonable care shall be taken to ensure that sign placement leaves adequate maneuvering room for disabled users to be able to cross to the other side of the street, or continue on the accessible path to their regular destination. *(See Figures 7 and 8 on pages 26 and 27).*

For complete sidewalk closures, "SIDEWALK CLOSED CROSS HERE" signs shall be provided at the crosswalk nearest each end of the closure. Where there is no pedestrian landing area on the far

side of an intersection, "near-side" signs with the same message supplemented with additional standard barricades, should be placed to clarify the sidewalk on the far side is inaccessible. "SIDEWALK CLOSED" signs shall also be placed adjacent to the actual sidewalk closure.

II. PEDESTRIAN REQUIREMENTS FOR BUILDING DEMOLITION / CONSTRUCTION

In downtown areas where demolition or construction of buildings near sidewalks occurs, special provisions need to be made in most circumstances to protect pedestrians and restrict access to construction activity. If the activity has the potential for dropping loads or creating hazards for pedestrians on the sidewalk, a covered walkway shall be provided for pedestrian protection. This is commonly necessary when the building wall is within six feet of the walkway, or when the distance of the walkway from the building is less than one-half the height of the exterior wall. Engineering judgment will determine when a covered walkway is necessary, but is generally not required if the walkway is a greater distance than one-half of the height of the exterior wall from the building. In that case, a construction fence is typically required to be installed prior to beginning either construction or demolition sites.

A Contractor intending to demolish or construct buildings in the influence area of pedestrian facilities must submit a professionally prepared temporary work zone traffic control and/or walkway plans to the Street Transportation Department/ROW Management Program Section for approval prior to obtaining a permit.

No loading or unloading of material, staging, or stopping of vehicles will be allowed on the street side of walkways and fences without approval from the ROW Management Program Section.

Gates and/or temporary fencing serving as access to the construction site shall not open out into the street or impede pedestrian walkways. Access to fire hydrants, traffic signal control boxes, manholes, and other utilities shall be maintained at all times.

Figure 7 – Sidewalk Closure Midblock (Access Retained to Business/Bus Stop)

Figure 8 – Sidewalk Closure at Corner

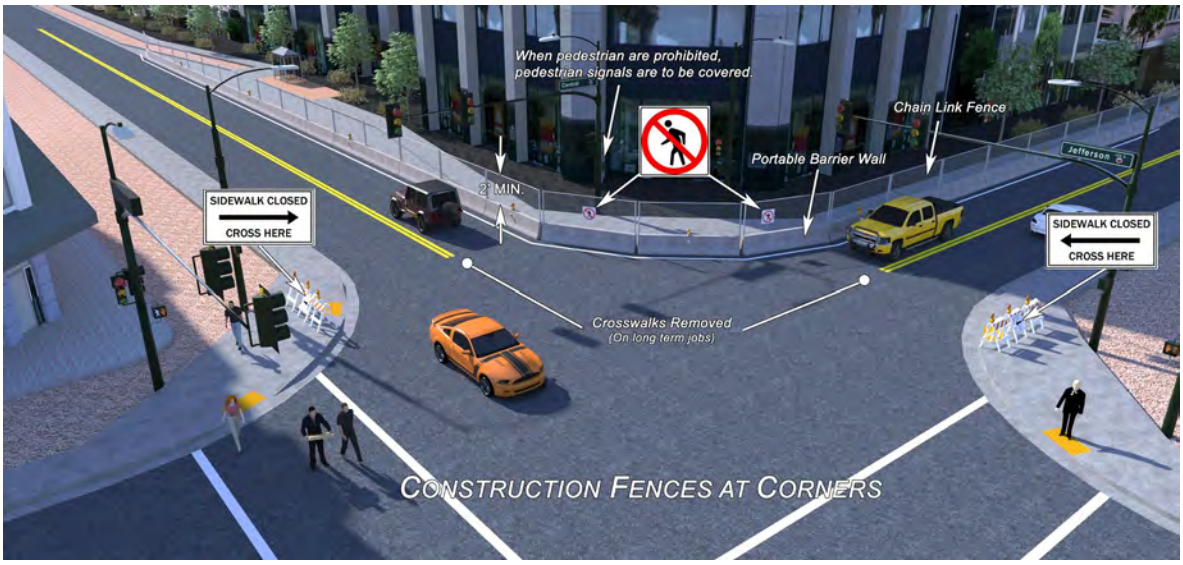

Figure 9 – Covered Pedestrian Walkway

III. COVERED PEDESTRIAN WALKWAYS

Constructing a covered walkway in the ROW requires a separate construction-building permit from the City of Phoenix Planning and Development Department.

Covered walkway requirements include:

- Construct using suitable material to support the loads to be imposed upon the structure. Minimum design requirements for the floor and roof shall be 150 pounds per square foot live load uniformly loaded.
- Maintain the walkway in good, clean condition, free of any debris, and fresh in appearance at all times.

- Repair damaged walkways and fences immediately.
- Coordinate with Traffic Signal section to maintain access to pedestrian push buttons and visibility to pedestrian signal heads.
- Place pedestrian directional signs (R11-11PHX) at the entrance to the covered walkway to give guidance to pedestrians.

City of Phoenix
PLANNING & DEVELOPMENT DEPARTMENT

Pedestrian Walkways / Construction Protection Policy

Issue Date:	May 1, 2016
Code/Section:	2012 IBC 3306 Table 3306.1 [Traffic Barricade Manual Reference]
Approved:	TRT August 6, 2012
Developed By:	Mark Sipes, P.E., Structural Engineer, P&D Team Leader
References:	Street Transportation Department Traffic Barricade Manual; 2012 International Building Code (IBC)

PURPOSE:

To ensure covered pedestrian walkway protection is properly permitted and inspected while providing safe pedestrian travel in the right-of-way adjacent to a construction site.

POLICY:

Section 3306 in the 212 IBC provides design standards for covered walkways used for pedestrian protection including minimum dimensions for width and height, design loads, placement relative to construction, etc. Chapter 3 in the Street Transportation Department's Traffic Barricade Manual addresses placement of covered walkways relative to intersections and includes conflict avoidance for pedestrians at intersections.

The following steps will help ensure that proposed covered walkways will be reviewed for both IBC and Traffic Barricade Manual requirements for pedestrian protection during construction and that the proper permits are issued:

The Contractor will coordinate a meeting with the Street Transportation Department Planning, Design & Programming Division where the site plan will be reviewed and comments will be provided for pedestrian signal conflicts and/or other conditions of interest. The Contractor will provide signed and sealed construction drawings including details and structural calculations along with a site plan indicating the walkway locations.

1. The Contractor will bring two copies of their submittal to the PDD Commercial Building Services Counter for log in for permit review at the counter.
2. The permit (SE for the walkway and lighting) will be a temporary permit to expire with the building permit. Site inspections will be performed throughout the duration of the permit. Since it is a temporary condition, a revocable right-of-way permit from the Street Transportation Department is not required. However, a permit for the use of the public right-of-way will be required from the Street Transportation Department, Traffic Services Division and administered by the Right-of-Way Management Office.
3. Points of contact to help coordinate reviews are the development review coordination staff in the Street Transportation Department. Right-of-way Management Office 1101 E Jefferson St. Phoenix, AZ 85034 Closure Request 602-262-6235, email rmp@phoenix.gov.

IV. BICYCLIST CONSIDERATION

A. General Requirements

Bicyclists may legally use both street and sidewalk and need to be considered under both conditions. When work encroaches upon a bike lane, shared-use path, shared lane, and signed bike route as identified on the City of Phoenix's bike map or clearly marked in the field, an accessible, safe, and clearly defined route shall be provided. Maximum effort should be made to provide a convenient bicycle way separated from active work areas. Bicyclists shall not be led into direct conflicts with mainline traffic, work site vehicles, or equipment moving through or around the traffic control zone. The work zone shall also not force a bicyclist into an unsafe condition, such as grating, debris, or an abrupt stop within moving traffic lanes as part of traffic control. Bicycle lanes and other identified bicycle routes shall be kept free of obstructions. If bicyclists cannot be accommodated through the work area with facilities comparable to pre-construction conditions, bicycle detours shall be considered.

Shared-use Paths – Construction on off-street shared-use paths shall provide an alternate route or maintain a 5-foot clear and clean path in both directions for bicyclists. If 5 feet cannot be maintained, an alternated route for bicyclists shall be provided either by use of an alternate smooth continuous hard surfaced path or a temporary bike lane on the street.

Bicycle Lanes – Permit Holder shall maintain all existing bike lanes. During construction, temporary bike lanes may be delineated by cones but at no time shall the clear width of a bike lane be less than 5 feet. The Permit Holder shall maintain a clear and clean path of travel for bicyclists at all times. Any bike lane that is effectively narrowed below 5 feet is considered a bike lane closure.

Bike lanes may be closed but only with an approved TRACS Permit. Closing a bike lane requires the same signage and traffic control as a travel lane.

The Permit Holder shall seek to safely accommodate bicycles through the work area and shall use advance signage that the bicycle lane is closed at a place where the cyclist can modify their route when necessary.

For example, when bicycle lanes are closed, advanced signing should be installed to warn the bicyclists and the motorists of the change in conditions and give users ample time to adjust their behavior. Any time a bike lane is closed, proper signing shall indicate "BIKE LANE CLOSED AHEAD" and "BICYCLES MAY USE FULL LANE" (R4-11).

Bike Route – Certain streets on the bicycle route network may not have painted bicycle lanes but are nonetheless important because they provide connectivity to the rest of the network. In particular, some bike routes allow bicycles to travel side-by-side with cars in the same lane. These streets are identified as having wide right-hand curb lanes. A curb lane is measured from the curb to the nearest lane line. Wide curb lanes are those that are approximately 22 feet or more in width on streets with parking, or 14 feet or more on streets without parking. The Contractor should maintain these widths wherever practical. If a wide curb lane will be affected during construction, the Contractor shall post a "Bicycles May Use Full Lane" R4-11 sign at the beginning of the block.

B. Work Area Accommodation

The Permit Holder shall accommodate bicyclists in work areas as follows:

1. The Permit Holder shall provide safe and protected bicycle access into, through, and out of the work area, including proper channelization and signage.
2. The Permit Holder shall ensure the roadway surfaces are frequently cleaned or swept to minimize exposure to bicyclists.
3. For travel lanes which continue through the work area, the Permit Holder shall provide advance warning to bicyclists and motorists of any transition into and out of the travel lanes.
4. For travel lanes which continue through the work area, the Permit Holder shall consider motor vehicle travel speed, grade, pavement condition, length of work area, lighting, and sight distance to determine if lane widths are sufficient to accommodate both motorists and bicyclists.
5. The Permit Holder will avoid requiring bicyclists to dismount their bicycles while traversing a work area, whenever feasible, and will provide advance notice to bicyclists when bicycling through the work area cannot be safely accommodated.

C. Bicycle Facility Closures

If the ROW Management Administrator determines that temporarily closing a bicycle facility traversing the work area is required for the safety of bicyclists, such closure requires the same level of signage and traffic control design considerations as when a travel lane is closed. The Permit Holder should include a bicycle facility closure setup within the proposed traffic control plan for review and approval by ROW Management before closing any bicycle facility.

Determination to close a bicycle facility will include consideration of the needs of all bicyclists who use the bicycle facility under normal conditions, including daily commuters as well as recreational and novice bicyclists. The conditions to be considered to close a bicycle include:

1. Removal or reduction of existing travel lanes and/or bicycle lanes through the work area and the ability to effectively transition bicyclists into and out of motor vehicle traffic;
2. Motor vehicle and bicycle travel speeds;
3. Grades, pavement discontinuities, abrupt elevation changes, and pavement friction degradation;
4. Significant amount or frequency of pavement grindings, potholes, steel plates, or utility lids;
5. Length and duration of work area; and
6. Lighting and sight distance.

D. Additional FHWA Information for Permit Holder Guidance

Bicyclists can experience difficulties when traveling through construction zones, particularly when roadway space is constrained and when pavement conditions are rough. In some instances, sudden pavement changes in construction zones can represent a severe hazard to bicyclists.

Through-bicycle movement must also be maintained. Bicyclists can share a lane over a short distance. On longer projects and on busy roadways, a temporary bike lane or wide outside lane may be provided. Bicyclists should not be routed onto sidewalks or onto unpaved shoulders. Debris should be

swept to maintain a reasonably clean riding surface in the outer 5 or 6 feet of roadway. Bicyclists have a low tolerance for surface grade changes and excessive bumps should be avoided. The placement of advance construction signs should not obstruct either the pedestrian or the bicyclist. Where this is not practical, placing signs half on the sidewalk and half on the roadway may be the best solution.

Bicyclists have a legal right of access to most highway facilities and provisions for their safe conduct through work zones are necessary.

1. Provide for and sign an appropriate alternate route when activities close a designated (signed) shared-use path or shoulder bikeway. Where horizontal separation for bicycles and pedestrians existed prior to work, give consideration to separating during work.
2. When laying out alternative shared-use paths, make sure no overhead obstructions present a direct hazard to normal bicycle operation.
3. Riding surfaces are important for safe bicycle operation. Loose gravel, uneven surfaces, milled pavement, and various asphaltic tack coats endanger the bicyclist. Consider the condition of the surface the bicyclist will be required to use.

Chapter 4

Accommodating Worker Safety

Everybody benefits when workers are able to complete their work in a safe environment. The unexpected nature of work zones and the constantly changing conditions that exist within work zones make workers particularly vulnerable to errant drivers. It is important that workers be trained by their employers to maximize safety when working in or near the roadway. This chapter provides guidance regarding two key components of promoting worker safety:

- **Safety Apparel (Personal Protective Equipment):** Workers exposed to risks of moving roadway traffic or work equipment should wear high-visibility safety apparel
- **Service Vehicles and Equipment:** Should be planned so as to minimize worker exposure to risk from roadway traffic and work equipment

This chapter addresses how Personal Protective Equipment (PPE) and service vehicles can help promote worker safety. Additionally, this chapter augments the national MUTCD with regard to surveyors who have the difficult job of working within roadways, often for short periods of time where it is not practical to set up a full array of devices.

I. HIGH-VISIBILITY SAFETY APPAREL

All workers exposed to the risks of moving roadway traffic or construction equipment should wear high-visibility safety apparel meeting the requirements of the International Safety Equipment Association (ISEA) "American National Standard for High-Visibility Safety Apparel and Headwear" (referenced in Section 1A.11 in the MUTCD), or equivalent revisions, and labeled as ANSI 107-2004 (or current edition) standard performance for Class 2 or 3 risk exposure. A competent person designated by the employer to be responsible for the worker safety plan within the activity area of the job site should make the selection of the appropriate class of garment.

For daytime and nighttime activity, flaggers shall wear safety apparel meeting the requirements of ISEA "American National Standard for High-Visibility Safety Apparel and Headwear" (referenced in Section 1A.11 in the MUTCD) and labeled as meeting the ANSI 107-2004 (or current edition) standard performance for Class 2 risk exposure. The apparel background (outer) material color shall be either fluorescent orange-red or fluorescent yellow-green as defined in the standard. The retro-reflective material shall be orange, yellow, white, silver, yellow-green, or a fluorescent version of these colors, and shall be visible at a minimum distance of **1,000 feet** (300 m). The retro-reflective safety apparel shall be designed to clearly identify the wearer as a person.

II. HOW SERVICE VEHICLES CAN BEST BE USED TO PROMOTE SAFETY

Worker safety can be enhanced with proper use of service vehicles. Service vehicles covered in this section are those required by the nature of their work to travel slowly, or stop for brief periods on City streets. Some large vehicles that routinely stop on streets, such as sanitation trucks and buses, are not considered service vehicles. They are exempt from the requirements spelled out in this chapter due to their sheer size, design, and/or their alternative provisions for safety. Service vehicle operations are the backbone of the fleet, which allow effective maintenance of utilities, traffic control, pavement, and other roadway infrastructure.

The City of Phoenix recognizes that service vehicles supporting short-term or mobile work warrant special procedures to complete their work safely and efficiently. If the full array of traffic control required for intermediate or long-term activity was required for service vehicles, the result could be counterproductive to both safety and functionality of the street system. The set-up and take-down time, effort, and cost would typically take longer than the time needed to complete the task at hand. Road closures lose functionality of streets for longer than necessary and workers would be exposed to a greater risk longer than necessary.

Instead, this section outlines special equipment that service vehicles may use in place of the full array of devices specified throughout this TBM when performing short-term/mobile activities. This special equipment has been found to provide at least equal overall safety as if the full array of devices is used. Arizona Revised Statutes already require vehicles to be equipped with warning devices deemed adequate for normal stops while driving in traffic. The special equipment described in this chapter is specifically for service vehicles that stop frequently in traffic, or need to be positioned unusually in the traveled way.

Service vehicle operations are prohibited on Arterial and Collector Streets during peak traffic hours, except when authorized by ROW Management Program Section or under emergency/disaster conditions governed by Police and Fire personnel. During all other times, service vehicle operators need to plan their work to minimize the extent of restriction.

When service vehicles must travel slowly or stop for brief periods, they shall display one of the following operating high-level warning light systems. *(See Figure 10, page 36).*

- **Two Rotating Flashers, Strobe Light High-Level Warning Light Device or LED High Intensity Flashers** – These devices are designed to provide 360-degree visibility and may be used in combination with, or incorporated into, a "light bar" for added visibility.
- **One Arrow Panel** – Approved arrow panels shall be used in combination with rotating flashers or strobe lights to highlight service vehicles and warn motorists of lane shifts or work activities.

Flashing lights on service vehicles need to be located so that they remain in full view, front and rear, and are not obscured by dump beds, vehicle-mounted equipment, or work activities. Minimum mounting height is 7 feet. The arrow panel shall be mounted on a vehicle, trailer, or other suitable support. Minimum-mounting height should be 7 feet from the roadway to the bottom of the panel, except on vehicle-mounted panels, which should be as high as practical. **Minimum panel size is 48 x 24 inches per the MUTCD Section 6F.61 on Arrow Boards and minimum panel mounting**

height is 7 feet per the MUTCD Section 6F.60 on Portable Changeable Message Sign.

For slow-speed mobile activities, standard operating procedures are to use special warning devices and the vehicle's four-way hazard warning flashers. On arterial streets, these vehicles must be equipped with one arrow panel to warn motorists of lane shifts or work activities. Mobile operations include pavement marking and street sweeping activities where equipment typically moves along the road at slow speeds.

When service vehicles stop for brief periods, standard operating procedure is to display the special warning devices and the vehicle's four-way hazard warning flashers. For short-term durations, work zones are limited to 250 feet including taper. On arterial streets, traffic cones should be placed a minimum of 10 feet from the rear of the vehicle or in a short taper (using six cones spread out about 50 feet). Placing flags on the upper rear corners of the vehicle has been found to be a relatively inexpensive and effective way to further enhance visibility.

Arrow panels are effective because they provide both warning and directional information ahead of time to motorists when the restriction causes traffic to change lanes. Because they are more effective than flashing lights, arrow panels are certainly preferable and, in some cases, mandatory to support work zones.

With the special equipment specified below, service vehicles are authorized to conduct short-term/mobile work for up to:

- **40 minutes if equipped** with two rotating flashing, strobe light, or LED high-level flashers
- **60 minutes if equipped** with approved arrow panels.

The more extensive signing, barricading, and channelization specified elsewhere in this TBM are necessary for service vehicles where they will be stopped in the street for more than one hour. Similarly, signs, barricades, and channelizing devices should normally be used for slow-moving or intermittent stops operations such as pavement crack sealing and tree trimming on Arterial and Collector Streets. These devices normally can be set up in short sections and moved as work progresses.

Figure 10 – Service Vehicle Operation

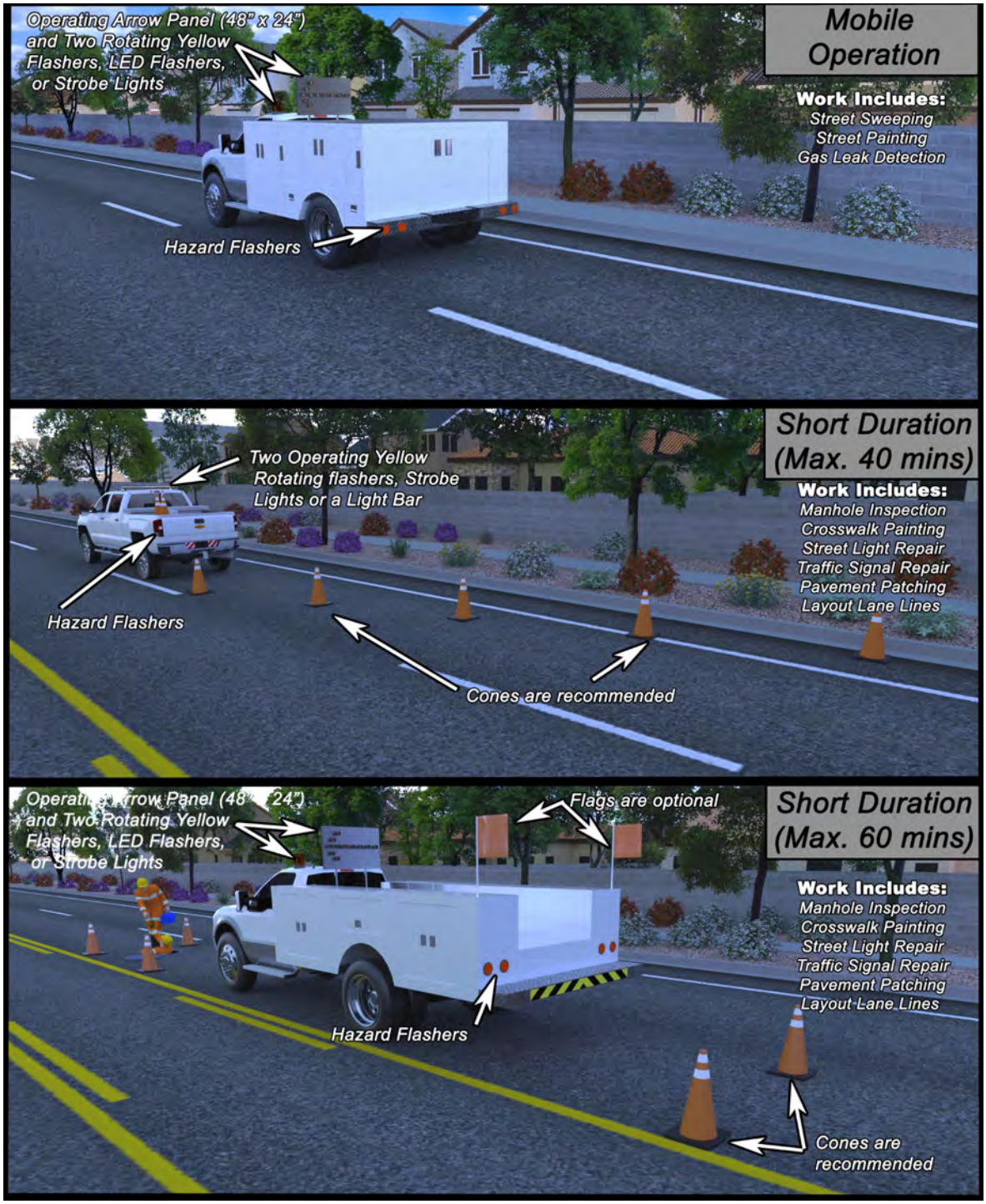

III. SPECIAL INFORMATION FOR SURVEYOR WORKERS

The very nature of urban survey work is potentially hazardous, not only for the survey workers themselves, but also for the traveling public. The surveyor enters the street as a pedestrian, but becomes a worker once he/she stops in the street. Workers are responsible for ensuring appropriate traffic control is in place and wearing protective clothing/apparel with high visibility markings.

For safety and efficiency reasons, ***surveying is not permitted on Arterial or Collector Streets during peak traffic hours***, except when such work is being performed in areas that are already under construction and the contract special provisions allow restrictions, or with the prior approval of the Street Transportation Department, ROW Management Program Section.

When surveyors need to temporarily occupy a reference point in the street, surveyors must have:

- Class 3 High visibility safety apparel
- Traffic cones or other standard barricade devices
- A flagger or a police officer whenever unable to see oncoming traffic

When surveyors are working in areas under construction, the approved temporary traffic regulations that apply to the Permit Holder apply to the surveyor as well. All traffic restrictions shall be coordinated in advance through the assigned inspection group or other authorized agency. "SURVEY CREW" warning signs properly placed in advance of the working area is valuable in alerting motorists of the surveyor's presence in traffic. The flag-type high-level warning device is extremely valuable for survey work, as it may be seen over the top of preceding vehicles. Therefore, the ***use of high-level warning devices is mandatory*** any time an instrument is set up in the street for durations longer than a short duration.

When survey work requires restricting a full traffic lane or when restricting traffic during hours of darkness, temporary traffic control devices (advance warning signs, barricades, and channelization) shall be provided and placed properly as required elsewhere in this ***TBM*** for those particular conditions.

Chapter 5

Existing Traffic Control Devices

Permit Holders are responsible for maintaining all traffic signs and pavement markings in their construction zones and for restoring the permanent traffic signs and pavement markings upon completion of their work.

During temporary traffic control operations, it is important to make sure that existing traffic control devices remain compatible with the temporary traffic control being deployed. This includes, but is not limited to, signs, parking meters, traffic signals, and pavement markings. The devices that remain applicable to the affected traffic must be maintained, while other devices must be covered, relocated, or in rare cases, completely removed. Requirements for each group of devices are detailed in this section.

I. TRAFFIC SIGNS

All signs shall be maintained upright, clean, and in full view of the intended traffic by the Permit Holder at all times. If these signs interfere with construction, the Permit Holder shall temporarily relocate the signs to permit construction, but the devices must be kept in full effective view of the intended traffic. Portable signs may be helpful to augment other signs, which temporarily cannot be placed in their optimum position.

Existing signs that are no longer applicable shall be removed by the Permit Holder, taking care not to damage the signs. The signs are to be salvaged by carefully storing them out of the way on the adjacent property line.

The Street Transportation Department shall be notified immediately of all sign removals by calling (602) 262-6449. When construction is complete, the Street Transportation Department will reset all needed signs at permanent locations. The assigned inspector shall notify the Street Transportation Department for sign replacements prior to completion.

II. TRAFFIC SIGNALS

The Permit Holder shall notify the ***Street Transportation Department, Traffic Signal Shop (602-262-6021)*** a minimum of 48 hours prior to the start of any underground construction in the vicinity of signalized intersections.

The Permit Holder shall keep existing signal equipment fully operational and in full view of traffic at all times. The only exception is when pre-approved by the City Traffic Signal Engineer specified in this manual, or reflected in the City Project Permit, Plans and Specifications. When necessary, vehicle detector sensing devices (typically inductive loops) and pedestrian push buttons may be deactivated with prior approval. However, they shall be reactivated or replaced by the Permit Holder

in an expedited manner when work is completed. The request must be accompanied by a full explanation of why it is necessary to do so, what alternative procedures shall be used to accommodate traffic, and what efforts are being made to minimize the time the detectors will be out of service. Left-turn arrows shall be de-activated when left-turn prohibitions are in effect. If traffic conditions are such that traffic signals cannot efficiently operate without sensor loops, the Permit Holder may have to deploy, at their cost, alternative detection devices. **Forty-eight-hour advance notice by the Project Inspector to the Traffic Management Center through email at phxtmc@phoenix.gov is required for this type of work.**

The Signal Shop will, upon request, provide the approximate locations of all underground signal equipment (conduits, junction boxes, vehicle detector sensing devices, etc.). The exact location of underground equipment shall be determined by the Permit Holder prior to excavation. During all work, the Permit Holder shall exercise due care to prevent damage to existing traffic signal equipment. If damage occurs, the Signal Shop must be notified immediately so that they can restore traffic signal operations. The Permit Holder will contact Arizona Bluestake (811) and will pothole all existing underground utilities to determine their exact location.

Responsibility for permanent repair/replacement of damaged equipment shall be:

- **At the Permit Holder's expense IF** the damage done was not preceded by a request for City blue stake/identification of equipment prior to the start of work.
- **At the City's expense IF** the damage done was preceded by a request for City blue stake/identification where appropriate time was given for the City to mark the underground equipment and the City failed to do so.

When existing signal equipment cannot be maintained, the Permit Holder shall, at their expense, have a qualified electrical Contractor move signal equipment to a temporary location. Another option is to provide temporary equipment capable of ensuring continuity of all signal functions (except vehicle detector sensing devices). The location and type of temporary signal equipment must be pre-approved by the Traffic Signal Engineer.

Signal equipment modifications shall be coordinated with the Signal Shop by the Permit Holder a minimum of **72 hours** in advance of work. When temporary or new equipment is installed to replace existing equipment, it shall be fully operational before the existing equipment is removed. The Permit Holder shall restore signal equipment to its proper location as soon as practical after all the work in the immediate area is completed. Traffic signal pedestrian push buttons must remain operational and accessible to pedestrians at all times unless provisions are made for manual control or fixed-time operation of the traffic signal.

It is important that drivers be provided with at least two signal indications within the 40-degree cone of vision approaching the signal *(see Figure 11, page 41)*. If traffic is to be repositioned in such a manner that two signal heads will not be within the driver's 40-degree cone of vision, the Traffic Signal Engineer shall be contacted immediately at 602-262-4693. The illustration on the following page shows approximate signal head locations for good visibility.

Figure 11 – Lateral and Longitudinal Location of Primary Signal Faces (Figure 4D-4, MUTCD, 2009)

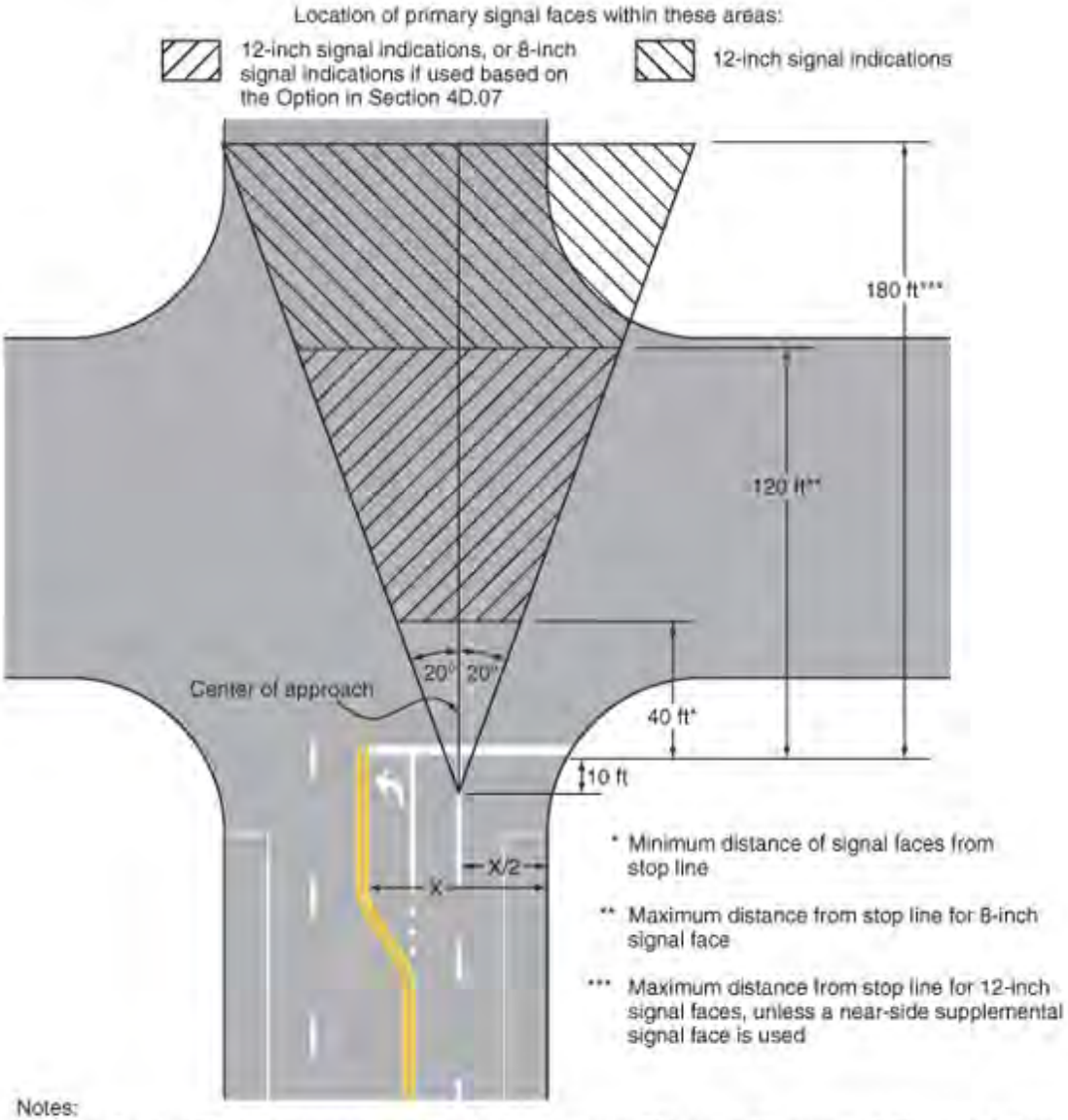

Notes:

1. See Section 4D.11 for approaches with posted, statutory, or 85th-percentile speeds of 45 mph or higher
2. See Section 4D.13 regarding location of signal faces that display a CIRCULAR GREEN signal indication for a permissive left-turn movement on approaches with an exclusive left-turn lane or lanes

III. REMOVAL OF CONFLICTING PAVEMENT MARKINGS

Existing pavement markings that cause driver confusion by conflicting with the intended vehicle path (indicated by barricades and channelization devices) shall be removed or obliterated by the Permit Holder, as directed by the Street Transportation Department. The City of Phoenix requires use of vertical traffic control devices instead of pavement markings to minimize driver confusion in work zones. This usually means that substantial pavement marking obliteration is only required on long-term or high-speed projects such as detours, special channelization for bridge construction, re-alignment for building construction, and similar fixed location projects. However, using engineering judgment, the City of Phoenix reserves the right to require the removal or obliteration of existing pavement markings anywhere that driver confusion exists due to pavement markings.

If pavement-marking obliteration is needed, a method should be used which leaves minimal pavement scars and effectively removes existing markings. High-pressure washing should be used to remove existing markings. Slurry seal (MAG Specification, Section 332) may also be used to obliterate markings.

When used, slurry seal shall be applied over existing markings in strips at least 24 inches wide. Markings that become exposed shall be recovered with slurry seal. Painting over existing markings with black paint or asphalt material is not typically acceptable, except for short durations with pre-approval from the Street Transportation Department.

IV. SCHOOL ZONES

Work zone signs in or near a **School Zone** can divert driver attention from school zone signs and street markings. The arrival and dismissal times of school children, buses, and parents dropping off children also create issues that may affect driver recognition of signs and warnings. Therefore, the following policy shall be followed when working in or near school zones:

- No work shall occur the hour before school starts and the hour after school ends, unless approved by the School Safety Coordinator or it is deemed an emergency by the City inspector.
- Contact with the school is required to determine the appropriate time that has the least impact on the school during construction or maintenance activity. Every effort shall be made to limit the effect on bus routes, crosswalks, and parent pick-up/drop-off access. A two-week lead time should be given to allow for notification to parents and school bus drivers of any changes in routes or entrances.
- School zone signs shall not be obscured or removed by any Permit Holder. School zone signs to be relocated for construction delineation shall be placed nearest to their original position, and should be a minimum 15 feet from any barricade or sign.
- When practicable, work shall be performed when school is not in session including weekends, summer, and fall/spring breaks.
- A preconstruction meeting shall be held with the City Inspector to determine the best course of action. The School Safety Coordinator from the Street Transportation Department should be contacted for complex or long-term projects near schools.

- Contact Information for **School Safety Coordinator: 602-534-2020 or 602-262-6284**
- When construction occurs in a school zone during school hours, a Temporary Traffic Control Plan is required.
- Pedestrian pathways on the same side of street will be established and maintained at all times.
- In the case of School Zones at major intersections, an off-duty police officer may be required. In any case, flagging operations shall not be allowed while the school zone is established.

Chapter 6

Temporary Traffic Control Device Applications

Temporary traffic control can be provided by using physical devices or by employing manual control using police officers or flaggers. Physical devices will be discussed in this chapter, while manual control of traffic using police or flaggers will be discussed in Chapter 7.

I. WHY USE TEMPORARY TRAFFIC CONTROL DEVICES?

Temporary traffic control devices are used to alert and guide road users through locations where roadways have been temporarily reconfigured for maintenance, construction, special events, or incidents. Temporary traffic control devices fall into five basic categories:

- Signs
- Barricades and Channelizing Devices
- High-Level Warning Devices
- Pavement Markings
- Portable Barriers

II. REMOVAL OF TEMPORARY TRAFFIC CONTROL DEVICES WHEN NOT APPLICABLE

Removal of temporary traffic control devices when not applicable has traditionally been a recurring problem. The City's ROW Management Program includes substantial fines for non-compliance in this area. The TBM **requires** that advance warning signs and barricade devices be immediately removed from drivers' sight lines when no longer applicable.

III. SIGN REQUIREMENTS AND APPLICATIONS

Signs are a very important part of temporary traffic control. They shall be placed in advance and at applicable points throughout traffic restrictions to provide navigational guidance to drivers. It is especially important to use initial warning signs in advance of traffic restrictions to prepare drivers for conditions ahead.

Temporary traffic control signs in Phoenix follow the same basic standards for signs specified in the MUTCD regarding size, color, and shape. However, based on engineering judgment and experience, a few variations are used because they have been determined to work better than nationally prescribed suggestions. Two notable variations include the size of the double arrow warning sign and the D1-108: Business Access blue sign color used in temporary traffic control zones. Otherwise, Warning and Guide signs in temporary traffic control areas shall have a black legend on an orange background.

Most, but not all, signs used in Phoenix temporary traffic control zones are included in this TBM. Each sign shall be displayed only for the specific purpose envisioned in this TBM. Uniformity of signs used contributes to effectiveness so that similar conditions will be similarly marked with the same type of signs. Doing so will help enable motorists to become conditioned to the required action indicated by signs. The less variation in signs, the fewer responses the motorist will have to learn.

A. Sign Size Requirements

Guidelines for sign sizes, colors, and shapes are shown in *Figure 12 (page 50), Figure 13 (page 53)*, and the MUTCD. The size of sign needed is dependent on the size and speed of the road in question, and how far out of the direct line-of-sight of the driver the signs are placed. Signs placed within roadways offer optimum line-of-sight visibility to drivers, which mean they work well at a smaller size sign than would normally be used if mounted at the side of the road. Larger signs are important on higher speed, rural highways where signs are mounted well away from the edge of roadways. Accordingly, the sign sizes shown reflect the suggested sizes for signs installed within roadways (warning and regulatory signs). The size of sign used may need to be increased for emphasis and where unusual conditions exist, making larger signs desirable. For signs mounted on posts along the side of the street (street-side supports), signs typically will be larger than shown in the illustration. There are some sizes where the size of legend/stroke width on the sign controls the final sign size, as the final product must offer good legibility.

B. Sign Sheeting Requirements

Historically, engineer-grade retro-reflective material has successfully been used in temporary traffic control zones throughout the world, and specifically in Phoenix. Newer products have emerged, however, which are substantially brighter. Additionally, the cost of higher-grade materials has come down. Combining that with the fact that competition in the sign industry has resulted in the quality level of engineer-grade material being reduced has resulted in national practitioners gradually upgrading to newer types of sheeting, except for signs where colors offer substantial contrast (i.e., black on white). This conversion by many agencies nationally has been spurred by those eager to achieve the advantages offered by brighter, longer-lasting signs. Furthermore, the addition of fluorescent characteristics to warning signs has strengthened conspicuity of signs, particularly during twilight hours.

Current standards include the following:

- Fluorescent Orange Prismatic (ASTM Type VII or brighter) warning signs to be used for the first advance warning sign(s) in a temporary traffic control zone. This includes, but may not be limited to, "Road Work Ahead," "Shoulder Work Ahead," and "Special Event Ahead" signs.
- Fluorescent Orange Prismatic (ASTM Type VII or brighter) warning signs for the double arrow or "splitter" signs (W12-1 and W12-1a) to compensate for their small size.
- High-intensity prismatic sheeting, or better, will be required for all other orange signs/barricades (ASTM Type IV).

Additionally, based on research which has shown that the engineer-grade black-on-orange signs do not provide the needed brightness and contrast, **all other black-on-orange sheeting for signs and barricades are required to be high-intensity, reflective sheeting (ASTM Type IV) or brighter.**

C. Nighttime Sign Requirements

All signs used for temporary traffic control operations during hours of darkness must:

- Be equipped with operating Type-A flashing barricade warning lights when mounted on portable supports.
- Be equipped with operating Type-B flashing warning lights when authorized to be mounted on street-side supports for advance warning at Arterial street construction projects.
- Have a minimum application of 150 square inches of orange, weather-proof, high intensity (minimum) retro-reflective sheeting on the back of signs exposed to opposing traffic. The retro-reflectorized sheeting is to be placed in strips not less than 5 inches wide along each outer edge of the sign. Signs placed in two-way left-turn lanes will have at least one Type I (or Type II with approved ballast) barricade placed a **maximum** of 10 feet behind the sign to alert opposing traffic.

All signs are to be mounted on standard vertical supports with minimum heights to the bottom of the sign panel as follows.

D. Portable Support Sign Height

Regulatory Signs:

- 36 inches, except sign codes R4-7a and 8a (KEEP RIGHT/LEFT)
- 12 inches for sign codes R9-102L&R (SIDEWALK CLOSED/PEDESTRIANS) and sign code R11-7A (SIDEWALK CLOSED AHEAD CROSS HERE), which shall be 24" x 30"

Warning Signs:

- 12 inches, except for W1-6 (large 36" arrow)

Guide Signs:

- 24 inches

Combination Regulatory and/or Warning Signs:

- 12 inches

Post-Mounted Signs:

- 84 inches (7 feet)(secondary signs may be 6 feet above sidewalk)

E. Sign Mounting Procedures and Placement

Standard vertical supports used for barricades, vertical panels, and flag trees are also acceptable for mounting portable signs. Suitable ballast should be placed on the base of all portable signs that are unattended.

Metal and wood signposts, such as those commonly used to mount permanent traffic signs and steel streetlight poles, are acceptable sign supports. However, signs shall not be typically mounted on wood utility poles or placed in areas intended for pedestrians. Where necessary to do so, care shall be taken to minimize interference with pedestrians and wheelchair accessibility.

As a general rule, portable signs are to be located on the right side of the street when right-lane traffic is restricted, and additionally on the centerline or median, when left-lane traffic is restricted. Post-mounted signs ***shall*** be located on the right side of the street and in protected medians. Where special emphasis is required, and where more than one lane of traffic in any one direction is affected, dual signs should be provided approximately opposite each other. Care shall be taken when signs are placed in the two-way left-turn lane to not obstruct access to or from driveways or intersecting streets.

Portable supports should be used for short-term and moving operations. Street side supports may be used when authorized for construction speed limit and advance warning signs on long-term, fixed construction operations, such as major street reconstruction.

For maximum mobility on certain types of construction and maintenance operations, signs may be mounted on a vehicle stationed in advance of the work, or moving along with it. This may be the working vehicle, pavement marking equipment, crack-sealing equipment, or a vehicle provided expressly for this purpose.

IV. TYPES OF SIGNS

Temporary traffic control signs fall into the following three major categories:

A. Regulatory Signs

B. Street Closure Signs

C. Guide Signs

D. Warning Signs

A. Regulatory Signs

Regulatory signs impose legal obligations or restrictions and are enforceable by the Police Department (City Code 36-300). To be enforced, their use must be approved by the Street Transportation Department, ROW Management Program Section. Special care must be used to ensure proper placement, use, maintenance, and ***removal*** of all temporary regulatory signs in a timely fashion. Conflicting existing regulatory signs shall be covered or removed.

The Permit Holder provides all regulatory signs. Commonly used signs are illustrated in *Figure 12* on the following page.

Regulatory signs used in construction and maintenance areas shall be the shape and color shown in the illustrations. They shall be used as follows:

- **Turn Restriction Signs:** NO LEFT (RIGHT) TURN (R3-1 and R3-2) signs are used whenever turns may cause excessive congestion at intersections during restrictions. A minimum of two signs (one on the near side and one on the far side of the intersection) is required for each direction of traffic affected. When buses can safely turn, "EXCEPT BUSES" panels should be considered and attached at the bottom of each sign when turn restrictions affect transit routes. Panels with hourly restrictions (e.g., "6 - 8:30 AM AND 4 - 7 PM MON-FRI") shall be used when turn restrictions are required only during specific hours.
- **Mandatory Turn Signs** are used to show motorists when they must turn right or left from a special turning lane, separated from the through traffic lane. A minimum of two signs (one in advance and one at the intersection) is required for each direction of traffic affected. These signs must always be used in conjunction with the W12-1 lane split sign, otherwise motorists may be led to believe through lanes exist on both sides of the sign.
- **"KEEP RIGHT/LEFT" (R4-8a and 7a) signs** shall be used at, or near, the start of all channelization, except where the "DOUBLE ARROW" W12-1 sign is used. The "KEEP RIGHT" (R4-7a) sign shall be used on both sides of intersections where temporary center line channelization is required.

B. Street Closure Signs

The "ROAD CLOSED TO THROUGH TRAFFIC" (R11-4) sign shall be used for closures of arterial streets where only local access is permitted. Where used, the proper "DETOUR ARROW" and detour instructions (M4-10) shall be displayed. "ROAD CLOSED AHEAD" and "DETOUR AHEAD" signs are to be used approximately 300 feet and 600 feet, respectively, in advance of all arterial and collector street closures (further for high-speed roadways). Mandatory turn lanes approaching street closures shall be closed.

The "ROAD CLOSED" (R11-2) sign shall be used for all Collector and Local street closures when only local access is allowed. A "LOCAL TRAFFIC ONLY" panel shall be displayed unless approved by the Street Transportation Department, ROW Management Program Section.

The "ALLEY CLOSED" (R11-2A PHX) sign shall be used for all alley closures.

The "DETOUR" (M4-9A) sign with arrow shall be used to mark detour routes when required by ROW Management Program Section.

The "BUSINESS ACCESS" (D1-108) sign may be required where access becomes a problem on major and Collector Streets that are closed for construction. It is installed on a barricade adjacent to the "ROAD CLOSED" sign when requested by ROW Management Program Section.

Figure 12 – Regulatory Signs

C. Guide Signs

Guide signs are used to direct motorists on detour routes and provide information in advance of street closures. Guide signs used in temporary traffic control areas are generally rectangular with a black legend on an orange background.

Guide signs most frequently used are "DETOUR" (W20-2) signs with arrows, as shown with the "STREET CLOSED" (W20-3) signs in *Figure 13*. "DETOUR" sign and detour instructions are incorporated into the design of the STREET CLOSED TO THROUGH TRAFFIC" sign.

When required, the Permit Holder shall provide separate "DETOUR" signs, with the appropriate arrow, at locations along a specific detour route as directed by ROW Management Program staff. When required, detailed detour route instructions and/or State and Federal route symbols shall also be provided and attached to the detour signs.

At times, when alternate detour routes for street closures are offset or points of closure are at locations where detours are not available, it is necessary to provide additional guide information signs. These signs generally have a legend similar to "SR-51 TO MCDOWELL EB CLOSED-USE 24TH ST" or "GREENWAY SB TO 1-17 CLOSED - USE 19TH AVE", with appropriate detour arrows. These signs shall be rectangular with a minimum size of 48 inches by 48 inches. The legend shall be black on an orange or fluorescent orange background.

The Permit Holder shall provide these guide signs, as specified in the City project or permit "Special Traffic Regulations," or as directed by the Street Transportation Department, ROW Management Program Section. The "SIDEWALK CLOSED" (R9-9) sign and "PEDESTRIANS PROHIBITED" (R9-3) sign shall be used for walkway closures as provided for in Chapter 3 of this Manual. **Special attention shall be given when contemplating the closure of pedestrian paths** to ensure that safe, reasonable, and accessible alternative walkways exist. Closures should only be requested, and subsequently approved when doing so is absolutely necessary for safe operation. Even then, maintaining access to businesses and transit stops must be taken into consideration. When complete closure is allowed, typically to ensure safety, advance warning of the conditions should be given by carefully positioning a "SIDEWALK CLOSED AHEAD" (R9-11/R9-11a) sign, so as not to impede pedestrian access. The pedestrian symbol/arrow sign shall be used to guide pedestrians to alternate walkways.

D. Warning Signs

Warning signs are used to notify unfamiliar motorists of specific hazards or restrictions in temporary traffic control zones. Within construction zones there may be a variety of temporary roadway conditions, such as reduced width, open excavations, or pavement removal. Motorists must be properly alerted well in advance to provide adequate time to react safely.

All warning signs are provided by the Permit Holder. Commonly used signs are illustrated in *Figure 13.*

Warning signs used in temporary traffic control zones shall be diamond shaped, except as shown in the warning sign illustrations. They shall have a black legend and/or symbol on an orange or fluorescent orange background. The warning signs illustrated shall be used for only those situations indicated by their legend or symbol. Distances such as 500 feet, 1,000 feet, 1/4 mile, or 1/2 mile may be used in place of the word "AHEAD" on advance warning signs and numerals may be used in place of words (e.g., "2" instead of "TWO").

The "ROAD WORK AHEAD" (W20-1) sign shall be used in advance of all construction and maintenance areas, except for exempt process (slow moving or short duration work in service vehicles). Minimum spacing for advance warning signs in advance of channelization should be equal to the taper lengths shown in *Tables 2, 3, & 4.*

Figure 13 – Warning Signs

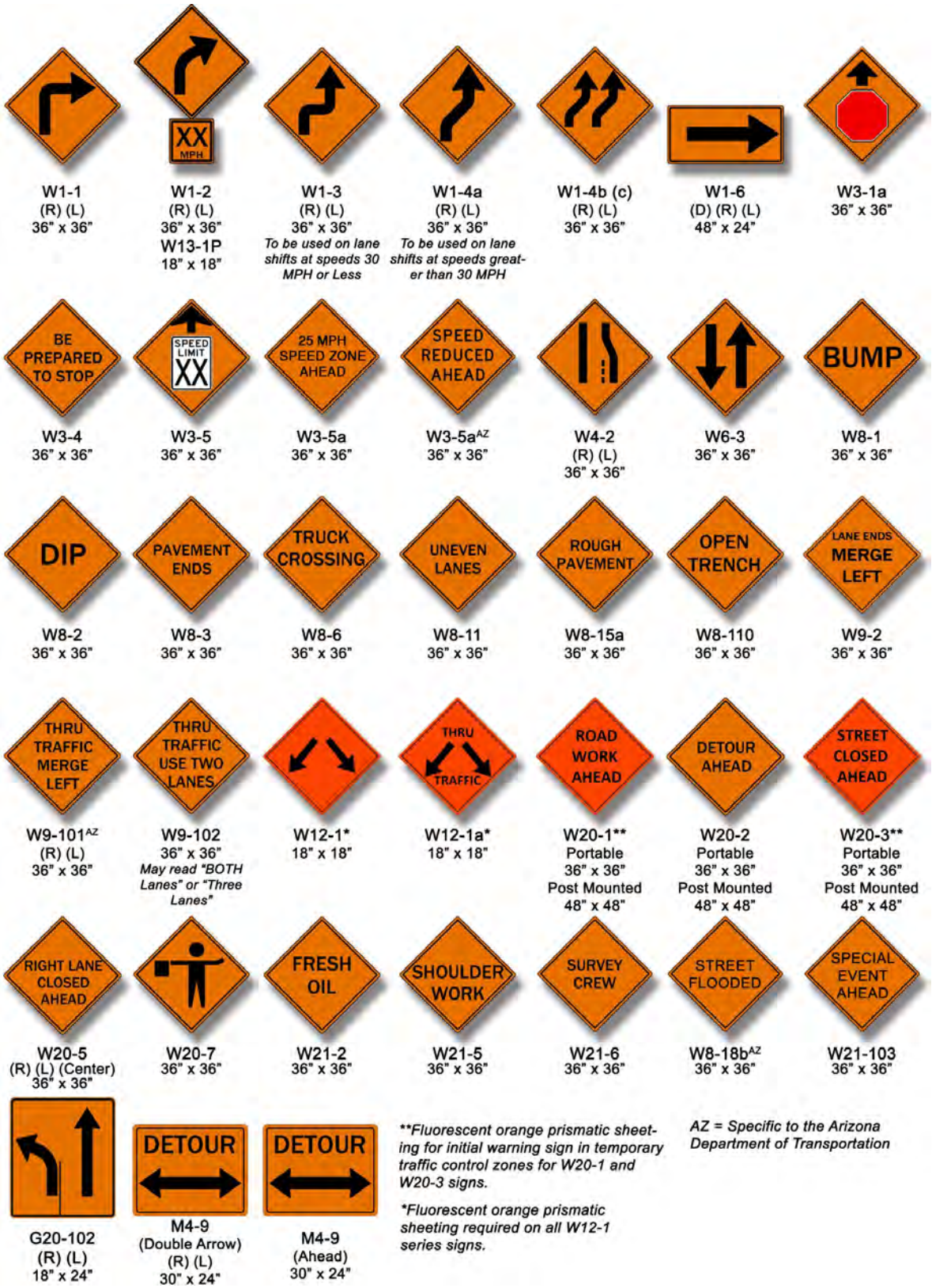

V. WORK ZONE SPEED LIMIT PROCEDURES

Speed limit signs are regulatory signs, and procedures for establishing work zone speed reductions may be appropriate. Procedures for determining when work zone speed reductions are required are outlined here. Speed reduction in work zones are required when the following conditions exist for temporary traffic control work zones:

- Roadway grade differential
- Roadway geometric changes
- Insufficient lighting for driver visibility
- Major traffic shift
- Flagging operation
- Lane Width Reductions

Research has shown that achieving large speed reductions in work zones is difficult, and it is preferable to not reduce speeds in work zones more than 10 miles per hour, except in unusual circumstances. Where speed limits are posted, the speed limit signs will conform to the following:

"SPEED LIMIT" signs are to be co-mounted with "WORK ZONE" signs when reducing speed limits within construction areas. Combining "WORK ZONE" and "SPEED LIMIT" signs has been found to be an effective method of encouraging speed reductions. Most motorists associate the lower speed limits with work zone activities and will adjust their speeds accordingly. Typically, there shall be a minimum of one sign combination in advance of construction, and a minimum of three signs per one-half mile for each direction of traffic affected. The large, post-mounted "WORK ZONE" and "SPEED LIMIT" signs may also be combined on posts at the side of the street for arterial street widening projects. At other locations, small signs on portable supports may be used. Existing, conflicting "SPEED LIMIT" signs shall be covered or removed.

Figure 14 – Work Zone Sign

G20-5aP

The "SPEED LIMIT 25" (R2-1) sign is typically used where the existing pavement has been removed, or where traffic is being maintained on temporary detour roads, on unpaved shoulders, or on traffic lanes that are severely restricted.

The "SPEED LIMIT 35" (R2-1) is commonly used where traffic is being maintained on new asphalt paving during the completion of street paving projects, and in most construction zones, on improved streets where restricted traffic is maintained on a reduced number of lanes.

Speed limits by State law shall not be reduced by local agencies in increments greater than 10 miles per hour. The "SPEED LIMIT 35" sign is also used for interim speed reduction in construction areas until construction progress requires 25 miles per hour.

VI. BARRICADES AND OTHER CHANNELIZING DEVICES

Channelizing devices are the most important part of temporary traffic control in temporary traffic control areas. They are used to warn and alert motorists of conditions created by work activities in or near the roadway and to guide roadway users. They are also used to separate vehicular traffic from the workspace, pavement drop-offs, pedestrians, and opposing traffic. They are not intended to be physical barriers. Channelizing devices should always be used in groups to warn and guide traffic.

Flag rope may be used between barricades and channelizing devices to provide additional guidance and security. In some major construction areas, and in areas with substantial pedestrian traffic, the use of fencing may be necessary for maximum safety.

New and improved guidance is evolving to better design for those with low vision. Increasingly, in long-term work zones, the techniques listed in this paragraph may no longer be appropriate depending upon the alignment of newly defined pedestrian paths. Designers should consider evolving technology, and where practical, design for pedestrians with low vision. The key to doing so is to provide continuous detectable bottom and top rails on channelization devices without gaps. See Sections 6F.63 and 6F.74 of the MUTCD for additional information.

Channelizing devices used to guide motorists must provide a smooth, gradual transition when moving traffic from one lane to another or onto a bypass detour, or when reducing the width of the street. This smooth, gradual transition is referred to as the "taper length." **The minimum desirable taper length formulas, calculated taper lengths, and spacing of devices for tapers are shown in Tables 7 and 8.**

It is the responsibility of the Permit Holder to provide and maintain temporary traffic control devices. All temporary traffic control devices shall be stabilized with sandbags, or other approved material (ballast), when necessary. Ballast shall be placed on the lower parts of the frame, or on the base, and not placed on top of any striped rail. The use of rocks, concrete blocks, concrete, or asphalt chunks, etc. as ballast is not permissible.

Channelization devices work as a system. Periodic reminder signing (such as "KEEP RIGHT/LEFT" signs) may need to be placed at frequent enough intervals that the proper message is self-evident to drivers. Channelization signs and devices must be provided whenever:

- Traffic is moved across the street center line;
- The existing center line is obliterated; or
- Traffic is maintained in other than the normal traffic lanes.

Minimum desirable taper lengths apply to streets of relatively flat grade and straight alignment. Adjustments may be desirable to provide adequate sight distance on the approach to channelization, and to accommodate cross streets and adjacent driveways. In urban areas characterized by short block lengths and driveways, longer tapers have not proven to be better than shorter ones. The reason for that is that extended tapers tend to encourage sluggish operation and encourage drivers to delay lane changes unnecessarily to the last moment, which creates friction.

When more than one lane is closed, a tangent length of channelization between the two closed lanes of no more than twice the taper length is desirable to distinguish between the two separate lane closures. Experience has shown that on busy streets with short block lengths, other factors make it imprudent to use that much distance. However, having some tangent clearly operates better than having none. *(See Table 4, page ii).*

When lanes are not closed, but rather re-directed, a shifting taper (½ L) using channelizing devices is helpful to clarify the driver's path. This is particularly useful in urban areas with all but extended long duration work where the three dimensional channelizing devices overpower non-applicable pavement markings. *(See Tables 1 and 3, page ii).* Spacing for devices used in tangent areas between tapers should be the same as the spacing for devices used in the adjacent tapers.

Channelizing devices are also used to protect workers in the street and to guide and protect pedestrians. Consequently, it is important that the design of channelizing devices be substantial enough to provide protection, yet not pose a threat to road users should a collision occur.

Typical uniform applications of channelizing devices are shown in the illustrations included in this TBM. Situations not illustrated shall be handled in conformance with the general methods set forth.

Traffic Cones: Traffic cones are used to channelize traffic, divide opposing traffic lanes, divide traffic lanes when two or more lanes are open in the same direction, and delineate minor maintenance operations. When traffic cones are used to divide traffic lanes or delineate minor maintenance operations, spacing should not exceed 50 feet.

Traffic cones are effective for **daytime** channelization of traffic and to delineate minor maintenance areas. Traffic cones are versatile because they are portable and if struck, they will not damage vehicles. They can be set up and removed quickly. When traffic cones are used, it is necessary to check them often because vehicles frequently move them. Cones are normally not considered suitable for nighttime use, except under emergency conditions, or special circumstances approved by a ROW Management Program administrator.

All cones shall be orange and a minimum of 28" in height, with the exception that 18' cones may be used during day hours and on local streets. For nighttime use, cones shall be retro-reflectorized.

Figure 15 – Traffic Cones

Steps should be taken to minimize the possibility of cones being blown over or displaced by wind or moving vehicular traffic. Cones may be doubled up to increase their weight.

Some cones are constructed with bases that can be filled with ballast. Others have specially weighted bases, or weight such as sandbag rings can be dropped over the cones and onto the base to provide added stability. Ballast should be kept to the minimum amount needed.

When traffic cones are used to channelize traffic, they shall be placed using an appropriate taper where applicable. Taper lengths should be as shown in *Table 2*. Because cones are smaller and less visible than standard barricades, ***spacing between cones used to channelize traffic should not exceed 50 feet for tangents and 25 feet for tapers, regardless of speed.***

Cones should not be used for pedestrian channelization or as pedestrian barriers in work zones on or along sidewalks unless they are continuous between individual devices and detectable to users of long canes.

Vertical Panel Channelizing Devices: Vertical panels are devices to enable 24-hour channelization. They are used in place of traffic cones when channelization is needed during nighttime hours. They are versatile because their height and amount of retro-reflective sheeting makes them substantially more visible than normal pavement markings. They are portable, lightweight, and use less street width than standard barricades. Professional experience indicates that at city speeds, vertical panels (when properly placed) override any existing pavement markings; therefore, positive guidance prevails to the point that existing pavement markings can remain, as they do not induce driver confusion.

Markings on vertical panel channelizing devices shall be alternate orange and white stripes, sloping down at a 45-degree angle to the side on which traffic must pass. When used to divide two traffic lanes in the same direction, the stripes shall slope down to the side on which traffic is being diverted. *(See Figure 16, page 60).* Both stripes (orange and white) shall be reflective with **Type IV (minimum)** high intensity retro-reflective sheeting.

Vertical panels shall be constructed of suitable material to the dimensions shown in *Figure 16, page 60*. The base and panel support should be substantial, designed to prevent overturning, and yet sturdy enough to ensure they do not become a projectile. Because the base can be an obstacle to traffic when

overturned, the base and support should be designed to minimize damage to a vehicle if struck. The base and panel support shall be galvanized, aluminum, or white in color, except rubber bases, which may be black.

Vertical panels are used to channelize traffic, divide opposing lanes of traffic, divide traffic lanes when two or more lanes are maintained open in the same direction, and in place of standard barricades where space is limited. When vertical panels are used to channelize traffic, they shall be placed on a taper to guide motorists past hazards. Taper lengths and vertical panel spacing should be as shown in *Table 2, page ii*.

When vertical panels are used in place of standard barricades to ***delineate hazards*** parallel to traffic, spacing should not exceed ***50 feet.*** When used to divide opposing lanes of traffic or divide two or more lanes traveling in the same direction, spacing should not exceed ***75 feet*** for short distances and ***150 feet*** for extended distances.

Vertical panels used during nighttime hours shall have an approved and operating barricade warning light mounted on top of panels that are components of a merge or shift taper. Warning lights are optional on tangent sections of the traffic control setup. Steady-burn warning lights should be considered by permit holder for use in areas with fog or snow, severe vertical or horizontal roadway curvature, nearby vertical drops or trenching, unlit roadways, and usually cluttered environments.

Type C, steady-burn warning lights shall be used in a series to channelize or guide traffic through merge or shift tapers, while Type A, flashing warning lights shall be used to delineate hazards at night.

Drums as channelizing devices are rarely used on urban streets in the Phoenix area due to space constraints. If drums are proposed for use, refer to Section 6F.67 of the MUTCD.

Barricades: Barricades used in the City of Phoenix shall be three types: Type I, II, and III. *(See Figure 16, page 60)*. Markings for all barricade panels shall be alternate orange and white stripes sloping down at a 45-degree angle to the side on which traffic is to pass. Both stripes (orange and white) shall be retro-reflective with Type IV (minimum) sheeting.

All barricades shall be constructed of suitable materials to the dimensions shown in *Figure 16, page 60*. Barricade supports shall be substantial enough to support what they hold.

Types I and II barricades are intended to channelize traffic through temporary traffic control work zones. Types I and II barricades are also used to delineate hazards in or near the street or sidewalk, or to close local and Collector Streets or sidewalks and alleys. When used to ***delineate hazards*** parallel to traffic, spacing should not exceed 75 feet. When used to close streets, sidewalks, and alleys, spacing should not exceed 5 feet.

Type I and II barricades used to channelize traffic shall be placed on a taper to guide motorists past hazards. Taper lengths and barricade spacing should be as shown in *Table 2, page ii*.

Type III barricades are used for complete street closures of Arterial streets when they are under construction. They shall be placed with a minimum of one on each side of the "STREET CLOSED TO THROUGH TRAFFIC" (R11-4) sign, and one centered on the back of the sign. Additional Type III barricades shall be used as required to close the street to through traffic.

Barricades used during hours of darkness shall have an approved operational barricade warning light attached. The warning light shall be mounted above the top panel and on the end of the barricade

closest to traffic. Type A flashing warning lights are used to delineate hazards and close streets, sidewalks, and alleys. Type C steady-burn warning lights are used in a series to channelize traffic and guide traffic through construction areas.

Types I, II, and III barricades are to have the responsible party's (Permit Holder) name and phone number placed near the bottom of the lowest panel. The letters are to be clearly legible and not less than one inch or more than two inches in height.

Figure 16 – Barricades and Other Devices

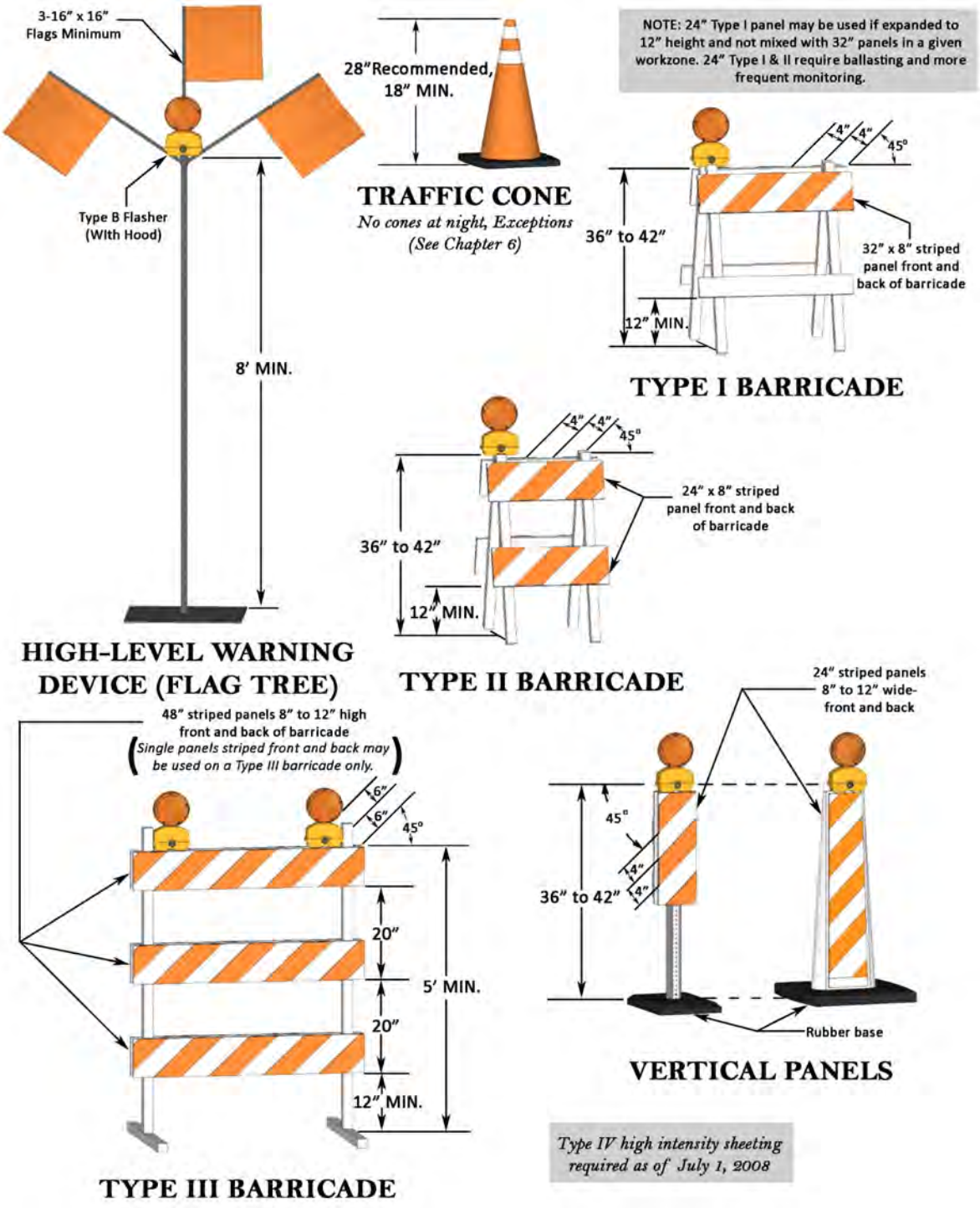

VII. BARRICADE WARNING LIGHTS

Barricade warning lights are yellow and mounted atop appropriate traffic control devices to call attention to the device and to provide alignment information to motorists. They shall be mounted on signs, barricades, and channelizing devices, as specified in this ***TBM***. Warning lights are optional on vertical panels that are components of tangent sections of the traffic control setup. However, steady-burn warning lights on vertical panels should be considered by permit holder for use in areas with fog or snow, severe vertical or horizontal roadway curvature, nearby vertical drops or trenching, unlit roadways, and usually cluttered environments. All barricade warning lights shall be in operation during nighttime hours.

Warning lights are portable, battery or solar powered, lens directed, enclosed light, which must be maintained so that the light provides proper illumination during nighttime hours.

Warning lights are to have minimum seven-inch diameter lenses that emit a yellow light and comply with the current Institute of Transportation Engineers "Purchase Specifications for Flashing and Steady-Burn Warning Lights." See Section 1A.11 of the MUTCD for additional information.

The four types of warning lights include: Type A, low-intensity flashing warning lights; Type B, high-intensity flashing warning lights; Type C, steady-burn warning lights; and Type D, 360-degree steady-burn warning lights.

- ***Type A, Low-Intensity Flashing Warning Lights*** are used to help warn drivers during nighttime hours. In Phoenix, they shall be used on all signs mounted on portable supports and on all channelizing devices (except cones and tubular markers) used to mark hazards and close streets. Type A warning lights are not intended to guide traffic.
- ***Type B, High-Intensity Flashing Warning Lights*** are used to help warn drivers both daytime and nighttime and shall be used on advance warning signs that are street mounted for major street construction and on "Flag Type" High-Level warning devices when used at night.
- ***Type C, Steady-Burn Warning Lights*** are to be used on barricades and vertical panel channelizing devices when used to guide traffic, form tapers, and delineate centerlines, lane lines, and the edge of the traveled way. Type C warning lights may be used on devices to mark hazards, but they are generally less effective than flashing lights for this purpose.
- ***Type D, 360-degree Steady-Burn Warning Lights*** may be used during nighttime hours to delineate the edge of the traveled way, or on the outside of a curve. Type D warning lights may be used in place of Type C warning lights.

VIII. HIGH-LEVEL WARNING DEVICE (FLAG TREE)

High-level warning devices (flag trees) are effective traffic control devices. They are particularly helpful in cities with busy streets because they are designed to be seen over the top of preceding vehicles. This height is particularly effective in providing drivers with advance notification of the need to shift or merge lanes. Use of a high-level warning device (flag tree) is required for advance warning of closures. When a closure is active during night hours, an arrow panel is required in place of a high-level warning device (flag tree).

Along with being required for advance warning of all lane closures, a high-level warning device (flag tree) is required in other circumstances such as flagging operations, surveying, etc. On fixed-location projects, high-level warning devices (flag trees) should be placed within or behind the channelization near the center of the area closed.

High-level warning devices (flag trees) shall display two or more flags supported so that the lowest point of the flags is 8 feet or more above the street. *(See Figure 16, page 60).* The flags shall be orange or fluorescent orange in color, and 24 inches square or larger. The flag support and base shall be substantial to resist overturning by wind. The flag support shall be galvanized, aluminum, or white in color.

During hours of darkness, each high-level warning device (flag tree) must be equipped with a minimum of one Type B High-Intensity Flashing Warning Light mounted more than 8 feet above the street. If equipped with a remote battery, the battery shall be mounted at the base, at ground level, to provide additional stability.

One high-level warning device (flag tree) is required for each direction of traffic affected. The devices shall be placed within, or behind the channelization, near the center of the area closed. Additional high-level warning devices (flag trees) may be used to support signs.

IX. FLASHING DEVICES AND APPLICATIONS

Rotating flasher and strobe light-type high-level warning devices are typically vehicle mounted. Electrically operated, rotating Sealed Beam or halogen lamp flashers, or strobe light flashers, may be used instead of, or in addition to, flag type high-level warning devices. Rotating Sealed Beam flashers shall consist of one or more Sealed Beam units at least four inches in diameter, rated at a minimum of 30,000 candlepower each. They shall emit a yellow light with a flash rate of 70 to 110 flashes per minute. LED flashers shall consist of multiple LEDs with a minimum rating of 0.5 watts each, and is capable of multiple flashing patterns with a range of 65 to 240 flashes per minute.

Halogen lamp flashers shall consist of one or more halogen lamps with a minimum rating of 50 watts, generating 50,000 candlepower each, reflected in a rotating or alternating pattern by high-quality parabolic reflectors. They shall emit a yellow light with a flash rate of 70 to 120 flashes per minute. Strobe light flashers shall be rated at a minimum of one million candlepower at the bulb. They shall emit a yellow light with a flash rate of 80 to 120 flashes per minute.

Rotating flashers or strobe lights shall be mounted on a vehicle or other substantial support. When practical, they shall be mounted at a minimum height of 8 feet above the street. The vehicle or other support with flashers in operation shall be positioned behind the required channelization and near the center of the area closed, except when used on a moving service vehicle.

Use of rotating flashers or strobe light-type high-level warning devices is particularly desirable during nighttime hours. They should be used instead of the flag-type high-level warning device, with flasher attached, whenever practical.

X. ARROW BOARDS

Arrow boards provide additional advance warning and directional information to assist in diverting traffic, which is especially effective under high-volume traffic conditions and at night. An arrow board's primary function is to provide advance warning of closed traffic lanes. Arrow boards are designed to flash directional arrows or chevrons. Arrow boards are powerful devices that can be seen far ahead of time and are required for use on Arterial streets when lanes are fully closed at night. If two lanes are closed sequentially, an arrow board is required for the first one to get the driver's attention. The only exceptions will be emergencies, or when service vehicles are used instead. A common example of when arrow boards may be required is when geometric conditions prevent the normal advance warning and taper/tangent distances from being achieved.

Arrow panels shall be rectangular (except type D, which are intended for use on service vehicles and have no panel). In the case of type D, the arrow length is 48", with an arrowhead width of 24." Arrow panels should meet the following specifications:

Figure 17 – Advance Warning Arrow Board Display Specifications (Figure 6F-6, MUTCD, 2009)

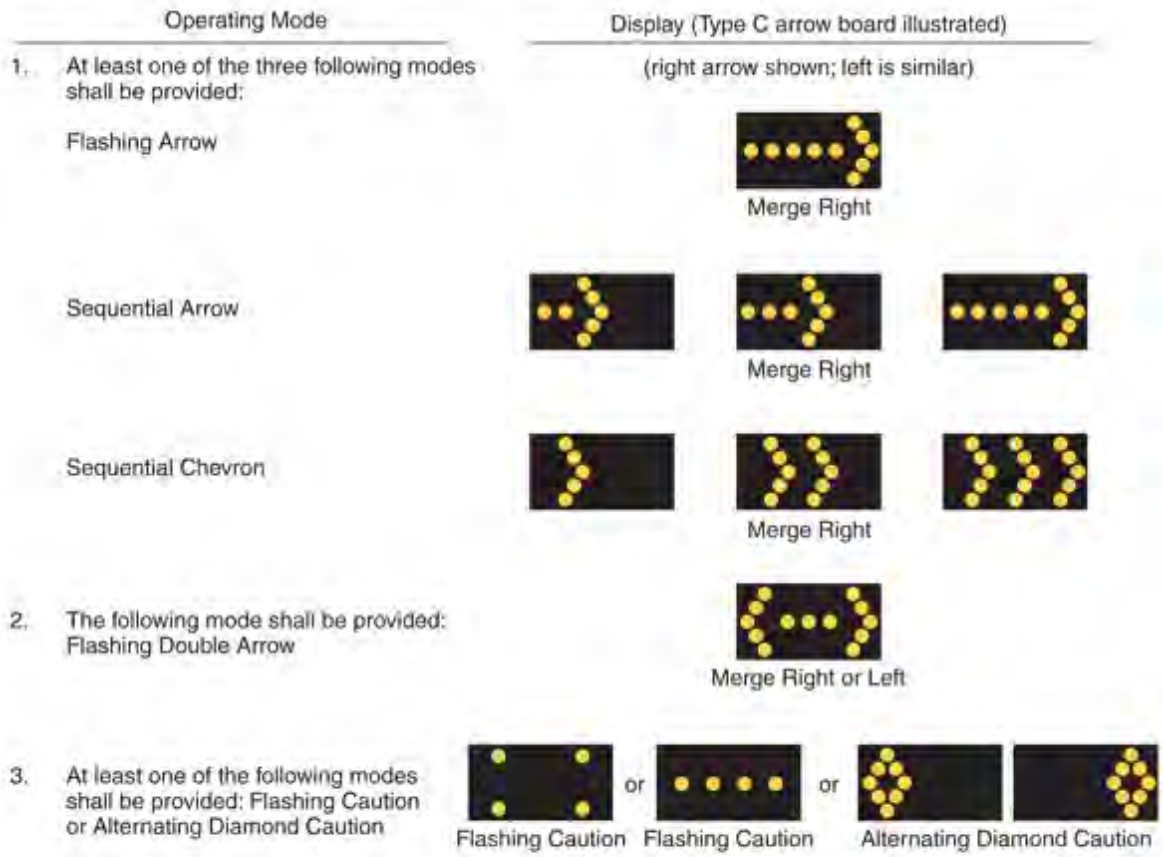

Arrow Board Type	Minimum Size	Minimum Legibility Distance	Minimum Number of Elements
A	48 x 24 inches	1/2 mile	12
B	60 x 30 inches	3/4 mile	13
C	96 x 48 inches	1 mile	15
D	None*	1/2 mile	12

*Length of arrow equals 48 inches, width of arrowhead equals 24 inches

NOTES:

Type A arrow panels are appropriate for use on low-speed urban streets.

Type B arrow panels are intended for use on intermediate speed facilities and for moving operations on high-speed roadways.

Type C arrow panels are intended for use on high-speed, high-volume facilities such as freeways and expressways; however, they may be used on City streets when additional warning is desirable.

Minimum mounting height should be 7 feet from the roadway surface to the bottom of the board, except on vehicle-mounted panels which should be as high as practical. Arrow boards must be in compliance with the specifications provided in Section 6F.61 of the *MUTCD*.

Arrow boards should be positioned on the shoulder, or in the parking lane, and at the beginning of the taper, where practical. When width is restricted, the arrow board should be positioned behind the required channelization near the start of the merging taper. When arrow boards are used to close multiple lanes during nighttime hours, a separate arrow board shall be used for each closed lane.

Since use of arrow boards can cause unnecessary lane changing, their best use is for closed lanes. In general, they should not be used for shoulder or roadside work activities.

XI. PORTABLE CHANGEABLE MESSAGE SIGNS

Mobile, electronic sign displays, such as portable changeable message signs, may be mounted on a trailer. Experience has proven the effectiveness of providing advance notice of projects though the use of portable changeable message signs. This notice can be provided up to 14 days in advance of the work. Careful attention should be given to the placement of these signs so they do not impede pedestrians, block driveways, or create visibility obstructions. changeable message signs must be placed on public right-of-way. A portable changeable message sign may be used to simulate an arrow board display.

XII. TEMPORARY PAVEMENT MARKINGS

Temporary pavement markings may be used to guide traffic in temporary traffic control areas when clean, hard surfaced street or detour roadway surfaces exist. Temporary pavement markings must be kept clean at all times. Normally, they should be used in combination with signs and channelizing devices. Upon project completion, temporary pavement markings shall be removed and permanent markings replaced. See Section III for the removal of conflicting pavement markings for acceptable obliteration methods.

The Street Transportation, Traffic Services division can approve reflective paint lines, pavement marking tape, or raised pavement markers to be used for temporary traffic control. Temporary pavement markings are generally used on paved detours and on arterial street construction between the completion of asphalt layers. ***Unless specifically approved otherwise by the Traffic Services Division*** when used on arterial street construction, temporary left-turn lanes shall be marked at all signalized intersections.

Reflective paint lines shall be applied with a suitable paint striping machine using City of Phoenix specifications for traffic paint and reflective glass beads, or an approved substitute. Paint lines shall have a minimum wet film thickness of 15 MILS with 6 pounds of glass beads applied per gallon of paint.

A two-week minimum notice is required for overlays. This allows sufficient time for the City of Phoenix Field Investigators to create work orders in order to schedule striping and pavement marking work.

Although vertical panels may be used to separate directional traffic flow during overlay construction, one application of paint striping or overlay markers for the entire street must be provided within forty-eight hours after completion of the overlay project on Arterial and Collector streets. This includes center lines, two-way left turn lanes, turn lanes, and white dashed lane lines. Other final striping such as pavement arrows and crosswalks are normally completed by City crews. All striping layout should be based on a striping plan and completed in coordination with the Street Transportation Sign Shop.

Reflective pavement marking tape, specifically manufactured for pavement marking, may be used in place of paint lines for temporary applications. Pavement marking tape shall be durable and have the appearance and reflectivity of paint lines. Application of short pieces of pavement marking tape to form dashed lines instead of pavement striping is not acceptable. Centerline markings are to be two 4-inch-wide yellow lines with a 5-inch space between.

Lane line markings are to be 4-inch-wide white lines, placed with 15 lineal feet of marking and 25 lineal feet of space between markings. ***When approaching marked crosswalks at unsignalized locations, the lane markings shall be 6 inches wide and solid, rather than dashed, to inhibit lane changing and speed and to enhance notification that a crosswalk exists.*** Edge lines are to be 4-inch-wide continuous white lines.

Barrier lines for mandatory turn lanes, pavement edge tapers, and lane transitions are to be 10-inch-wide white lines. Normal crosswalk lines are to be white and 10 inches wide while school zone 15 mph crosswalks are to be yellow.

Raised reflective pavement markers may be used instead of paint or tape markings. They are most helpful on unlit curves, unlighted areas, and on detours. Centerline markers shall be yellow, while lane line and edge line markers shall be white. Spacing between markers, when used instead of centerlines, shall not exceed 10 lineal feet on straight alignments and 5 lineal feet on curves. Lane lines shall be in groups of three markers, spaced 5 lineal feet apart, with 15 lineal feet of space between groups on straight alignments, and 10 lineal feet of space between groups on curves.

Where reflective markers are used to supplement edge lines, their spacing should be at least twice as frequent as the adjacent lane lines to eliminate driver misinterpretation of these as lane lines.

Without this close spacing, some drivers may believe another lane exists beyond the markers. Spacing between markers used to supplement centerlines, lane lines, and edge lines shall not exceed 40 feet on straight alignments and 20 feet on curves.

XIII. TEMPORARY TRAFFIC SIGNALS

A temporary traffic signal system may be used to control vehicular traffic movements at construction or maintenance work areas, when a traffic engineering study indicates it is necessary. The Traffic Operations Division must specifically approve each use.

All traffic signal control equipment shall meet the applicable standards and specifications prescribed in Parts IV and VI of the *MUTCD*. If a temporary traffic control signal is installed, the “TRAFFIC SIGNAL AHEAD” (W3-3) sign shall be placed in advance of all approaches.

If it is desired to use temporary traffic signals, the Permit Holder shall prepare a detailed Traffic Control Plan (TCP) showing the location, use, timing, and hours of operation at each work area for approval prior to installation. Signal controller phasing and timing must be pre-approved by the Street Transportation Department, Traffic Services Division. Only Police Officers or properly trained Police Assistants under the direct on-site supervision of a Police Officer, may manually control permanent or temporary traffic signals, unless otherwise approved by the Street Transportation Department, ROW Management Program Section.

XIV. CONCRETE BARRIER

Portable barriers are usually precast, reinforced concrete units, commonly referred to as Jersey Barriers or Temporary Traffic Barrier Walls (TBW). These devices are approximately 36 inches high, vary in length, and taper from a wide base to a narrow top. They are designed to be physical barriers placed parallel to traffic lanes to help prevent penetration of vehicles leaving the traveled way, thereby minimizing injuries to vehicle occupants, and to protect workers, bicyclists, and pedestrians.

The four primary functions of TBWs are to:

1. Keep vehicular traffic from entering work areas, such as excavations or material storage sites;
2. Separate workers, bicyclists, and pedestrians from motor vehicle traffic;
3. Separate opposing directions of vehicular traffic; and
4. Separate vehicular traffic, bicyclists, and pedestrians from the work area as false work for bridges and other exposed objects are being used.

Portable barriers shall only be used in combination with the required signs and supplemented with standard barricades and channelizing devices for improved daytime and nighttime visibility. Barriers may serve the additional function of channelizing traffic. When serving this function, barriers shall be light in color and equipped with vertical panels, marking tape, and barricade warning lights. The first two warning lights at the start of a continuous barrier shall be Type B, flashing warning lights. All other warning lights shall be Type C, steady-burn warning lights. Spacing for barricade warning lights and vertical panels shall be as required for vertical panel channelizing devices in this Manual.

The traffic approach ends of all portable barriers shall be protected from vehicle impact by the use of impact attenuators or flaring the ends to be outside the clear zone. When space permits, approach ends shall be flared at a 45-degree angle to a minimum of 10 feet from the traveled way. When space does not permit, barrier ends shall be protected with impact attenuators, as required in the *MUTCD* and the *AASHTO Roadside Design Guidelines.*

XV. WATER-FILLED BARRIER

Standard “water-filled” barriers are suitable for use with the following stipulations:

- Water-filled barriers are to be placed parallel to the direction of traffic flow.
- The traffic approach or angled “flared-ends” are to be standard precast reinforced concrete units.
- The devices may only be placed on Phoenix streets after proper review of the entire work zone and approval of the specific TCP.

Chapter 7

Manual Traffic Control – Police and Flaggers

Manual control of traffic is essential at times, in order to add the human decision element to complex temporary traffic control situations. By using human judgment, Police Officers and flaggers can accomplish things that no physical traffic control device can do. Police Officers and flaggers can visually assess traffic conditions and respond accordingly.

Use of Police Officers for manual control of traffic is expensive but essential during complex temporary traffic control work. Police control is often required at traffic signals when lane closures exist. It is essential that human judgment be present (police) at signals to allocate green time to best move traffic through the intersection.

When an officer is required by the Street Transportation Department, only uniformed Phoenix, Maricopa County Sheriff's Office, or Department of Public Safety (State Capital) law enforcement officers may be used to control traffic in Phoenix. Using only these agencies expedites enforcement (citation writing) and ensures reliability. The City seeks officers equipped with portable radio/phone to enable prompt contact with appropriate Phoenix police, and those who display a firm understanding for traffic safety and operations.

I. POLICE CONTROL

On-duty Police Officers are only available for use during emergency conditions and for traffic control during restrictions by City Departments when traffic conditions warrant. On-duty Police Officer use is coordinated by the Police Department Information Desk. Call 602-262-7626 Monday through Friday from 7:30 a.m. to 3:00 p.m.

Off-duty Police Officers are to be hired by the Permit Holder for traffic control when required. Off-duty Police Officers can be arranged contractually, or if Phoenix Police Officers are unavailable through agencies, Permit Holders may arrange for them by calling the same number listed above if 24-hour advance notice is provided. Police Officers that are alert, visible, and accommodating can be a valuable public relations asset for both the City and the Permit Holder. Conversely, they can create a poor image for the City if they are not contributing to the efficient and safe movement of traffic. Since officers wear an official uniform, their performance reflects powerfully upon Phoenix.

Expectations of the City and employers of Police Officers hired to provide manual traffic control are set high. When police officers are hired to support construction/maintenance/special event efforts, expectations are that officers will:

- Perform in a manner that favorably reflects on the City of Phoenix
- Manually operate signals in such a manner so as to benefit pedestrians, public vehicular traffic, and the Permit Holder
- Position themselves in such a manner as to have access to the traffic signal cabinet, yet maintain a full view (360-degree vision) of ALL traffic movements
- Station their vehicle in a manner that does not block sidewalks or traffic

Upon arrival at the job site, the off-duty Police Officer shall:

- Contact the Permit Holder or assigned City inspector to receive detailed instructions on how the movement of the displaced traffic is to be sequenced through the signalized intersection
- Be equipped with the proper equipment (e.g., highly visible safety vest, signal cabinet access key, two-way radio, etc.) as required to perform this vital temporary traffic function
- Ensure that physical obstructions (e.g., no vehicles parked on sidewalks and/or near the signal controller cabinet) prevent access for pedestrians with disabilities
- "Stand-their-post" at all times except for during planned breaks (e.g., not simply watching work being performed, etc.). As with any employer, breaks need to be coordinated with the Permit Holder. This includes work shift changes for continuous operation of the intersection

Additionally, other **duties** of off-duty Police Officers assigned to temporary traffic control sites may include, and are not limited to, the following:

- Keep traffic lanes functional, and free of all illegally parked vehicles
- Enforce properly signed turn restrictions at intersections to achieve the required number of through lanes to maintain traffic flow
- Request a copy of the approved TRACS permit and the Traffic Control Plan from the Permit Holder
- Confirm work zone set-up has proper advance warning of critical issues such as lane closures
- Do what is necessary to affect manual traffic control when needed to cope with unforeseen, traffic pattern changes such as during bridge beam erection and blasting operations
- Observe, and immediately report, traffic problems to the appropriate inspection staff
- Enforce speed limits/other restrictions in or near the work zone
- Assist as needed with temporary traffic control setup and takedown activities
- Assist flagging operations as needed by providing a more authoritative presence to motorists

II. FLAGGER CONTROLS

Flaggers (see definition) should be alert, courteous, neat, and possess a sense of responsibility for the safety of the public and work crews. Flaggers shall be certified by the American Traffic Safety Services Association (ATSSA) or an equivalent credited training institution by **one year after the TBM is adopted by the Phoenix City Council** and must have registration card and photo identification on person during flagging operations.

For daytime and nighttime activity, flaggers shall wear high-visibility safety apparel that meets the Performance Class 2 or 3 requirements of the ANSI/ISEA 107-2004 publication entitled "American National Standards for High-Visibility Apparel and Headwear (see Section 1A.11 of the MUTCD). Flaggers shall also wear an approved hard hat and incorporate the use of an authorized STOP/SLOW sign to manually control traffic. The STOP/SLOW sign shall be 18 inches wide and octagonal shape with 6-inch Series C letters. The STOP face shall have a red background with white letters and border. The SLOW face shall have an orange background with black letters and border. The sign shall be mounted on a suitable staff to support the sign a minimum of 5 feet from the ground when in use.

The use of flags for controlling traffic is limited to emergency use only. Flagging procedures are illustrated in *Figure 18*, *page 70*.

Flaggers shall be stationed at a readily visible location on the shoulder, or behind channelization, in advance of the restriction. Flagger stations shall be marked with a high-level warning device (flag tree). "FLAGGER AHEAD" and "BE PREPARED TO STOP" signs shall also be used in advance of each station. **At no time should a Flagger be allowed to stand in the traveled portion of the roadway, or cross a traffic lane to stop more than one lane of traffic.**

Each Flagger station shall be illuminated during nighttime hours. All traffic control devices, including the STOP/SLOW sign and the Flagger's vest, shall be reflectorized. Signs, barricades, and channelization in advance of each Flagger station shall have barricade warning lights attached and in operation.

Flaggers are limited by the ***MUTCD*** to flagging operations that can be accomplished from the edge of the traveled way, but Police Officers are authorized by City Code to direct traffic as required. Police Officers can operate traffic signals, control multiple lanes of traffic, complete intersections, and even permit/prohibit specialized lane movements. They can also assist pedestrians and enforce traffic restrictions.

III. POLICE OFFICER AND FLAGGER FUNCTIONS

Police Officers or flaggers, depending on the situation, are required at locations where equipment is intermittently blocking or crossing a traffic lane, or where ***only one traffic lane*** is available for two directions of travel.

Police Officers carry with them the broad authority of State Law to control traffic, and also possess special training. Those characteristics make Police Officers essential (required) at locations such as:

- Multiple-lane, signalized intersections when traffic is restricted to **one through traffic lane** in any one direction,
- Additionally, Police Officers may be required at signalized intersections when restricted to less than the normal number of lanes.

Police officers or flaggers, depending on the situation, are required when a large number of trucks enter and leave construction sites. Use of Police Officers is mandatory whenever manual control of traffic cannot be performed by Flaggers from the edge of the roadway. Police Officers or Flaggers shall be provided for manual traffic control as required by ROW Management Program as specified in this TBM.

Figure 18 – Flagging Procedures

Flaggers shall use a Stop/Slow paddle on a 5' staff and a high level warning device (flag tree) at all times.

Daytime: Flagger must wear ANSI Class II or better vest with a hard hat.

Nighttime: Flagger must wear ANSI Class III apparel with a hard hat and be visible by use of a light tower or other direct light.

Chapter 8

Quality Requirements for Traffic Control Devices

To be effective, a traffic control device (permanent or temporary) must be of high quality and:

- Fulfill a need;
- Command attention;
- Convey a clear, simple meaning;
- Command respect from road users; and
- Give adequate time for proper response.

I. QUALITY OF TEMPORARY TRAFFIC CONTROL DEVICES

The City of Phoenix fully supports the **Quality Guidelines for Temporary Traffic Control Devices and Features (2016 edition)** published by the American Traffic Safety Services Association (ATSSA). Phoenix staff worked with ATSSA in creating photographs that depict signs and barricades in clear stages of degradation. The intent was to define what varying quality levels of signs and barricades were required to command respect from road users. The ATSSA results are shown in the following pages. Inspectors and barricade companies who assess the effectiveness of their devices to **determine** if they fall into at least the "MARGINAL" category should regularly use these graphics. It is important to remember that for safety reasons, and to not risk receiving notices of violation, temporary traffic control devices should always meet or exceed the "**MARGINAL**" category.

The 2009 Manual on Uniform Traffic Control Devices (MUTCD) provides the following support guidance in Section 1A.01 on Temporary Traffic Control (TTC) devices.

"The purpose of traffic control devices, as well as the principles for their use, is to promote highway safety and efficiency by providing for the orderly movement of all road users on streets and highways throughout the Nation."

"Traffic control devices notify road users of regulations and provide warning and guidance needed for the uniform and efficient operation of all elements of the traffic stream in the manner intended to minimize the occurrences of crashes."

Traffic control devices are a necessary part of TTC work zones to warn road users of hazards, advise them of the proper path through the work zone, delineate areas where they may not operate, and to separate them from the workers. This is accomplished by the deployment of a setup of devices. The success of a setup depends on the visibility of each device at the time of a project's initial installa-

tion as well as throughout the life of the project. Since it is not practical to require new devices at all times, guidelines are needed to evaluate the condition of used devices to ensure continued effectiveness. The guidelines in this publication should aid in the determination of the quality of used devices.

The use of TTC work zone devices subjects them to wear that does not occur with permanent devices. Much of this wear occurs during the storage, shipment, installation, relocation, and removal of devices causing deterioration in appearance. Whenever a high number of worn and damaged devices appear on the same project, the general appearance of the TTC work zone deteriorates, reducing the level of safety provided to the workers, pedestrians, bicyclists, and traveling public.

These guidelines have been developed in an effort to offset the deterioration in appearance of TTC work zone devices. A determination of the condition of device quality should be made at several stages: while in storage, during preparation for delivery to the TTC work zone, during initial set up and periodically during the course of the work. Suppliers and Contractors are encouraged to apply this guideline prior to delivery of devices to the jobsite. Doing so will minimize agency involvement and reduce costs related to on-site replacement.

FHWA policy requires that all roadside appurtenances such as traffic barriers, barrier terminals and crash cushions, bridge railings, sign and light pole supports, and TTC work zone hardware used on the National Highway System meet the crashworthy performance criteria contained in the AASHTO Manual for Assessing Safety Hardware (MASH). All temporary traffic control devices placed in City ROW should conform to these requirements.

The FHWA Safety Website identifies all such approved traffic control devices and includes copies of FHWA acceptance letters for each of them. In the case of proprietary items, links are provided to manufacturers' websites as a source of detailed information on specific devices.

Crashworthiness and crash testing information on devices described in Part 6 of the MUTCD are found in AASHTO's "Roadside Design Guide."

II. QUALITY CLASSIFICATIONS

The quality of the TTC zone devices in this guideline has been divided into three categories: acceptable, marginal, and unacceptable.

At the time of the initial set up or at the time of major stage changes, one hundred percent (100%) of each type of device (cones, tubular markers, drums, barricades, vertical panels, signs, warning lights, arrow panels, changeable message signs, pavement tape, and raised pavement markers) shall be classified as "acceptable." Throughout the duration of the project, the percentage of acceptable devices may decrease to seventy-five percent (75%) of the initial quantity, as a result of damage and/or deterioration during the course of the work, with the remainder of the devices in the marginal category. Unacceptable devices or situations that are found on the jobsite shall be replaced or the situation corrected within twelve (12) hours of notification or as specified in the contract specifications.

Acceptable: Devices that meet the quality requirements in this TBM for this classification and all other requirements such as design, size, color, weight, etc. in the plans and specifications shall be considered to be acceptable for use on highway construction or contract maintenance projects.

Marginal: The term "Marginal" for the purpose of this manual means "marginally acceptable," reaching the lower end of acceptability. Devices that meet the quality criteria for marginal as described in this TBM may remain in the TTC zone until their number exceeds the specified percent-

age of that type of device or until it is determined that they have become unacceptable. Should the percentage of devices in the marginal category exceed the specified percentage, the proper number of those devices shall be replaced so as to bring the percent of marginal devices to the specified percentage or less.

Unacceptable: Devices in this category shall not be delivered to the jobsite. When found in the TTC zone, they shall be replaced or repaired within 12 hours of notification or as contained in the contract specifications.

Use of temporary traffic control devices found in City of Phoenix ROW rated as Unacceptable may result in fines per City Code 31-204. Devices in the "Marginal" category will not result in fines.

The following photographs, together with the accompanying description, should be used as a guide to determine if the device is acceptable, marginal or unacceptable. A direct comparison of each device to this guideline is not required for rejection of devices; however, this guideline should be used to resolve disputes. One aid in avoiding potential disputes is to retain samples of devices in each category to supplement the photographs shown in the evaluation guides that follow.

III. APPLICATION OF THE QUALITY GUIDELINE

Application of this guideline provides the means to meet the requirements of Section 1A.05 of the MUTCD, which states:

"Physical maintenance of traffic control devices should be performed to retain legibility and visibility of the device, and to retain the proper functioning of the device. Clean, legible, properly mounted devices in good working condition command the respect of road users."

IV. QUALITY GUIDELINES FOR CHANNELIZING DEVICES AND SIGNS

This guideline applies to all channelizing devices and signs that are furnished by the agency, supplier, Subcontractor, or Contractor and used for traffic control in TTC zones.

All channelizing devices and signs shall conform to the requirements of the MUTCD with regards to size, shape, color, placement, and legend. Special signs, if required, are normally detailed in the plans. All are devices required to meet AASHTO MASH standards and shall be approved for use by the FHWA.

Signs shall be substantially plumb to the pavement. Sign positioning at the work site should be determined based on site conditions. Usually the sign spacing may be increased if a design location proves to be unsuitable. Signs mounted on temporary mounts that are not vertical by design (A-Frame barricade for example) should be as near vertical as practical.

For barricades or vertical panels to be used in TTC work zones, all requirements shall be met to the satisfaction of the contracting agency. Vertical panels shall be erected and maintained in a vertical position. Barricades shall be considered unacceptable if they have bent or twisted legs, unfinished or excessively rusty metal parts, unfinished wooden rails, or deformation of the support assembly to the extent that the barricade panel is not reasonably parallel to the roadway surface.

Channelizing devices and signs should be constructed and ballasted to perform in a predictable manner when inadvertently struck by a vehicle. Channelizing devices and signs should be crashworthy. Fragments or other debris from the device or the ballast should not pose a significant hazard to road users or workers.

Any situation where there are more than two adjacent channelizing devices missing or substantially out of alignment will cause an unacceptable situation.

The evaluation guide that follows is to be used to evaluate the quality of the reflective face and general appearance of signs, barricades, vertical panels, and cones.

Work Zone Signs Quality Evaluation Guide

Figure 19 – Work Zone Signs Quality Evaluation Guide

Acceptable:

There are several abrasions on the surface, but very little loss of lettering. There has been no touch-up of the lettering. This message is legible per the design criteria of the MUTCD

Marginal:

Of the many surface abrasions throughout the sign face, many are within the individual letters of the message. The sign surface is free of any residue. Although some color fading is evident, the background color and reflectivity are still apparent at night. This message is legible per the design criteria of the MUTCD.

Unacceptable:

Signs with asphalt splatter or cement slurry of an amount similar to the abrasions that are evident throughout the face of this sign are unacceptable. Some letters have a loss of more than 50 percent (50%). There is noticeable color fading, and the message is illegible per the design criteria of the MUTCD.

Barricade Quality Evaluation Guide

Figure 20 – Type I, II, or III Barricade or Vertical Panels Quality Evaluation Guide

Acceptable:

Panel is not deformed to an extent so as to decrease the panel's target value. There are several abrasions on the surface, but very little loss of reflective sheeting. The orange is vivid, and the stripes provide contrast.

Marginal:

There are numerous surface abrasions through the panel surface. Some color fading is evident; however, it is free of large areas of residue or missing reflective material. The orange is vivid and the stripes provide contrast.

Unacceptable:

The surface is marred over a high percentage of the panel area. There is noticeable loss of reflectivity and obvious color fading. Panels with asphalt splatter and/or cement slurry, or any combination of missing and covered reflective material similar in area to that shown here would also make a panel unacceptable.

Cone Quality Evaluation Guide

Figure 21 – Traffic Cone Quality Evaluation Guide

Acceptable:

The conical shape should remain clearly identifiable with no significant distortion and must be free standing in its normal position. The surface is free of punctures and abrasions. The surface is free of asphalt splatter, cement slurry or other material and will readily respond to washing. The reflective bands, if required, have little or no loss of reflectivity, with only minor tears and scratches.

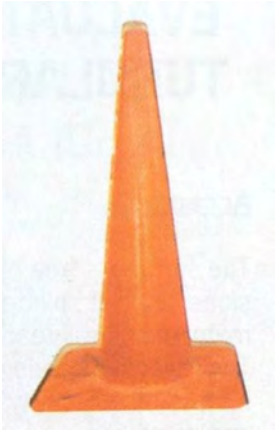

Marginal:

The surface has some asphalt splatterings or cement slurry and may not be readily cleaned due to abrasion and discoloration. The reflective bands, if required, have numerous tears and scratches, but are free of large areas of residue or missing material.

Unacceptable:

Punctures and large areas of staining asphalt splatter or cement slurry make these an unlikely candidate for improvement. Large areas of missing or stained reflective material make the cone unacceptable.

V. WARNING LIGHTS

Acceptable: This standard applies to all Type A, B, and C warning lights, advance warning arrow panels, and portable changeable message signs that are furnished by the agency, supplier, Subcontractor, or Contractor and used for traffic control in work zones.

The use and placement of Type A, B, and C warning lights, advance warning arrow boards, and portable changeable message signs are specified in the contract documents. All Type A, B, and C warning lights, advance warning arrow boards, and portable changeable message signs shall be in accordance with the most current version of the MUTCD.

For Type A, B, and C warning lights to be functioning properly, they must meet the MUTCD criteria which states: "Type A low intensity flashing warning lights and Type C steady burn warning lights shall be maintained so as to be capable of being visible on a clear night from a distance of 3,000 feet. Type B high intensity flashing warning lights shall be maintained so as to be capable of being visible on a sunny day when viewed without the sun directly on or behind the device from a distance of 1,000 feet".

The evaluation guide that follows is to be used to evaluate the appearance and function of Type A, B, and C warning lights, advance warning arrow panels, and changeable message signs. Because of the different types of advance warning arrow panels approved for use, the evaluation guide will address each type (mode) of panel separately.

Any warning light, arrow panel, or changeable message sign that is out of alignment from the intended driver's line of vision shall be considered to be "unacceptable."

Acceptable: One hundred percent (100%) of all warning lights must be properly operating and meeting the MUTCD specifications.

Marginal: Not less than ninety percent (90%) of the warning lights must be properly operating and meeting the MUTCD specifications with no more than three (3) adjacent lights failing.

Unacceptable: Less than ninety percent (90%) of the warning lights properly operating and meeting the MUTCD specifications, or more than three (3) adjacent lights failing, or more than one (1) Type B warning light failing for more than twelve (12) consecutive hours or as specified in the contract document.

VI. ARROW BOARDS

A. Arrow Board (Flashing Arrow Mode, or Sequential Arrow)

Acceptable: Not more than one (1) lamp out in stem and none out in arrowhead, and dimming properly.

Marginal: Two (2) or fewer lamps out in stem. No lamps out in the head. Dimming properly.

Unacceptable: Any lamp out in the head, or more than two (2) lamps out in the stem or arrow panel not dimming properly.

Note: *Any operating lamp that is out of alignment will be considered "unacceptable."*

B. Chevron Mode

Acceptable: No lamps out in any chevron segment.

Marginal: Not more than one (1) lamp out in any one chevron segment, and dimming properly.

Unacceptable: Two (2) or more lamps out in any one chevron segment, or not dimming properly.

Note: *Any operating lamp that is out of alignment will be considered "unacceptable."*

C. Arrow Board (Caution Mode – Bar or Corners)

Acceptable: Four (4) or more lamps operating and dimming properly.

Marginal: Minimum of four (4) lamps functioning, dimming properly.

Unacceptable: Less than four (4) lamps functioning or not dimming.

Note: *Any operating lamp that is out of alignment will be considered "unacceptable."*

D. Arrow Board (Double-Arrow Mode)

Acceptable: Not more than one (1) lamp out in stem and none out in arrow heads, and dimming properly.

Marginal: Two (2) lamps out in stem, but both heads completely functional with no lamps out and dimming properly.

Unacceptable: Any lamps in heads out or more than two (2) lamps out in the stem, or arrow panel not dimming properly.

VII. CHANGEABLE MESSAGE SIGNS

Acceptable: Ninety percent (90%) or more of the pixels per character module are operating properly.

Marginal: No less than ninety percent (90%) of the pixels per character module are operating properly.

Unacceptable: Less than ninety (90%) of the pixels per character module are operating properly or not performing within the criteria of the MUTCD.

VIII. PAVEMENT TAPE, PAINT, AND RAISED PAVEMENT MARKERS

The guideline applies to all temporary pavement marking furnished and/or installed by a supplier, Subcontractor, or Contractor for traffic control in TTC zones. These markings include tape, paint, and temporary raised pavement markers.

The use and placement of pavement markings are specified in the contract documents. All markings shall be in accordance with the current version of the MUTCD.

The evaluation guide that follows is to be used to evaluate the appearance, function, and acceptability of temporary pavement markings in TTC zones.

A. Pavement Marking Tape and Paint

Acceptable: All pavement marking tape or paint required (solid lines and broken lines) is in place and meets all material specifications.

Marginal: No more than ten percent (10%) of all tape, paint, message or symbol, or no more than two (2) consecutive broken lines, or no more than fifty (50) continuous feet of solid line is missing.

Unacceptable: More than 10% of all tape, paint, message or symbol, more than two (2) consecutive broken lines, or more than fifty (50) continuous feet of solid line is missing.

B. Raised Pavement Marker

Acceptable: All temporary raised pavement markers required are in place and meet all material specifications.

Marginal: No more than ten percent (10%) of the total raised pavement markers or no more than three (3) consecutive temporary raised pavement markers are missing.

Unacceptable: More than ten percent (10%) of the total raised pavement markers or more than three consecutive temporary raised pavement markers are missing.

IX. STORAGE OF TEMPORARY TRAFFIC CONTROL DEVICES

Property dedicated for public roadways and walkways belong to the public and need to be kept clear for public travel rather than used for private benefit, such as storage of signs and barricades. Too often, inconsiderate street/sidewalk workers leave barricades/signs sloppily across sidewalks or where they virtually preclude access to buildings, crosswalks, sidewalks or bus stops. When this happens, it imposes two adverse impacts: impedes accessibility and/or selfishly forces users to take lengthy alternate routes. This creates a tort liability risk for both the public entity and the company/individual responsible for using the ROW to store the devices.

Temporary devices cannot be stored in the ROW for extended periods of time because of appearance, vandalism, and the main fact that the ROW belongs to the general public. When temporary traffic control devices are allowed to be stored in the ROW, the “cluster” method shall apply to minimize problems. Certified temporary traffic control providers are expected to strategically place and “cluster” the devices in a professional manner, which will not impose physical obstructions to a pedestrian, bicyclist, motorist, or person in a wheelchair, and will minimize the probability of drawing public complaints.

Chapter 9

Special Events

The City allows and often supports special events in the public ROW. However, events are only allowed if the organizer follows the documented rules and regulations. City policy allows and encourages City staff, event organizers, the Downtown Phoenix Partnership, barricade companies, and others to coordinate when it comes to planning, staging, implementing, and approving special events in the City right-of-way or adjacent to the right-of-way.

I. SPECIAL EVENT POLICY

The City's special event policy guides both City staff and event organizers on how events should be operated when these special events are held on public streets. The ultimate goal of the policy is to protect the health, safety, and welfare of the citizens of Phoenix by regulating the time, place, and manner of conduct of special events and by establishing permit requirements. There are often races, parades, and other recreational or competitive events that require usage of the streets and public right-of-way. The City of Phoenix supports these events because they provide outdoor recreation, add to the quality-of-life for residents and tourists, generate community involvement, and often serve as a fund raiser for community agencies and non-profit organizations.

Street restrictions and closures related to special events can have negative effects on the community. Closed streets can cause significant inconvenience and delays for road users, residents, and businesses. Access to/from homes and businesses may be temporarily rerouted or closed, reducing quality of life and business operations.

The goals of the special event policy are to:

- Maximize the positive results of these special events;
- Set forth a clear and consistent plan to manage special events and street restrictions;
- Allow fair access and use of public streets and facilities;
- Establish communication between the community and City personnel; and
- Regulate and codify the process in which events can be permitted and held safely.

II. PLANNING AN EVENT ON CITY STREETS

A special event review of the proposed route and closures by the Fire, Planning and Development, Police, Public Transit, Street Transportation, and other involved departments is crucial to safety, traffic flow, and commerce. As part of the special event review process, it is important to understand the following:

- Public announcements, internet pages, or advertisements by event planners or promoters will have no bearing on the determination by the City of Phoenix on whether or not to allow the event.
- The City of Phoenix Special Event review may adjust the route and time for safety and the overall good of the community and businesses. If the event cannot be safely run or conflicts with another event, it may be denied. In addition, approved recurring events can be reserved in advance.
- The event promoters or organizers must provide advance notice to the City of Phoenix and coordinate the event with the Police Department to allow for the proper staffing of officers. The Street Transportation Department will review the temporary traffic control plans and may or may not issue temporary use permits for street restrictions.

For more information, use the following link:

http://www.phoenix.gov/specialevents

Appendix A-1

Temporary Traffic Control Illustrations

The following pages show typical applications of signs, pavement markings, and channelizing devices. They illustrate strategies that have proven to be effective and efficient throughout Phoenix and represent the most common methods required for the uniform application and placement of standard traffic control devices. Specific situations, not specifically illustrated, need to be addressed making best use of the general principles described in this manual, the MUTCD, and these illustrations. The illustrations are "typical" situations, and where applicable, differentiate between daytime and 24-hour treatments.

Notes about the Illustrations:

The "ROAD WORK AHEAD" sign is the key "lead" sign used to advise of an upcoming temporary traffic control work zone. Barricades, vertical panels, and channelizing devices are normally used to:

- Define the proper paths for motorists, pedestrians, and bicyclists through the work zone;
- Mark hazards such as holes, equipment, materials, and drop-offs;
- Close streets; and
- Separate workers, pedestrians, and bicyclists from vehicular traffic

Traffic cones are normally used during daylight hours only. During the hours of darkness, they must be replaced with standard channelizing devices. Exceptions are rarely granted and must be approved by the ROW Program Administrator.

Devices used during darkness must be equipped with fully operating warning lights, as specified. Only Type C steady-burn warning lights are to be used on devices placed to guide traffic (tapers, centerlines, lane lines, or edge lines). Only Type A or Type B flashing warning lights are to be used on signs and flag type high-level warning devices as specified. Type A flashing warning lights should be used on devices marking hazards because they have proven to be the most effective for this application.

Figure 22 – Street Closure Signing (Hard and Soft)

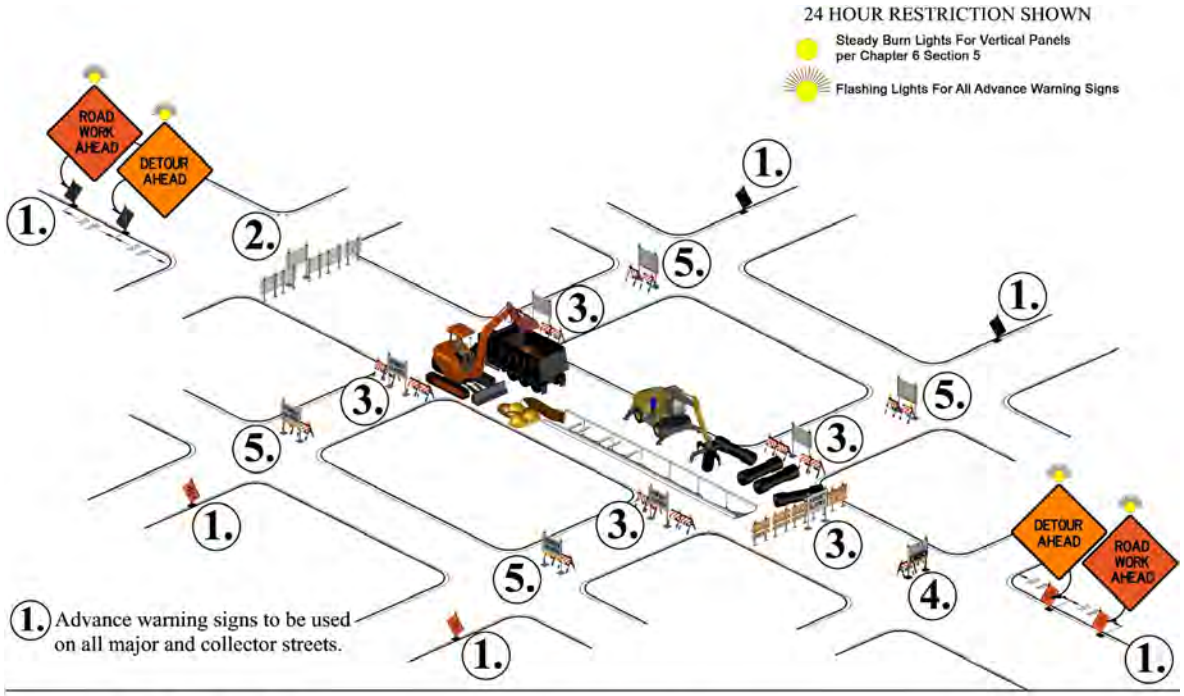

HARD CLOSURES

2. R11-4 sign (without To Thru Traffic phrase) with Type III barricades to cover the full width of the roadway. To be used for all other major and collector hard closures.*

3. R11-2 sign (without Local Traffic Only panel) with Type I barricades to cover the full width of the roadway. To be used for all other local hard closures.*

MAJOR/ COLLECTOR STREETS
Use R11-4

LOCAL STREETS
Use R11-2

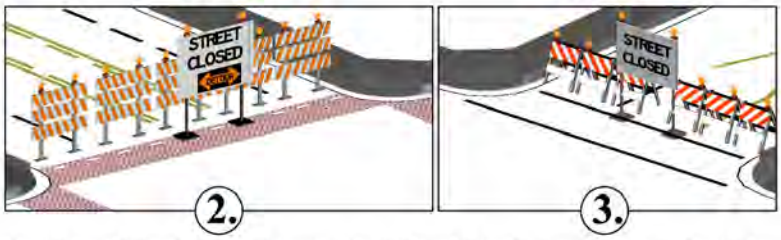

HARD CLOSURES

4. R11-4 sign (with **To Thru Traffic** phrase) with Type III barricades. To be used for all other major soft closures.*

5. R11-2 sign (with Local **Traffic Only** panel) with Type I barricades. To be used for collector and local soft closures.*

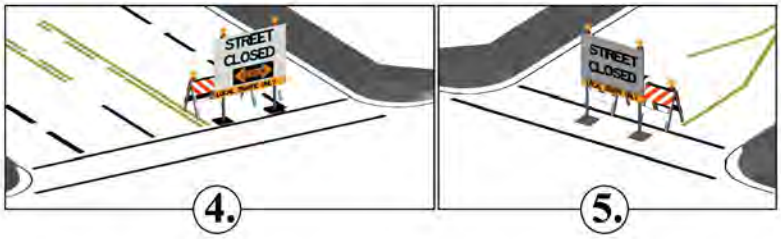

NOTE: Existing mandatory turn lanes approaching hard closures shall be closed. *(See Figure 14)*
**Reference Figure 7 for signage, Figure 8 for equipment*

STREET CLOSURE SIGNING (Hard and soft)

Figure 23 – Turn Lane Treatments for Hard Closures

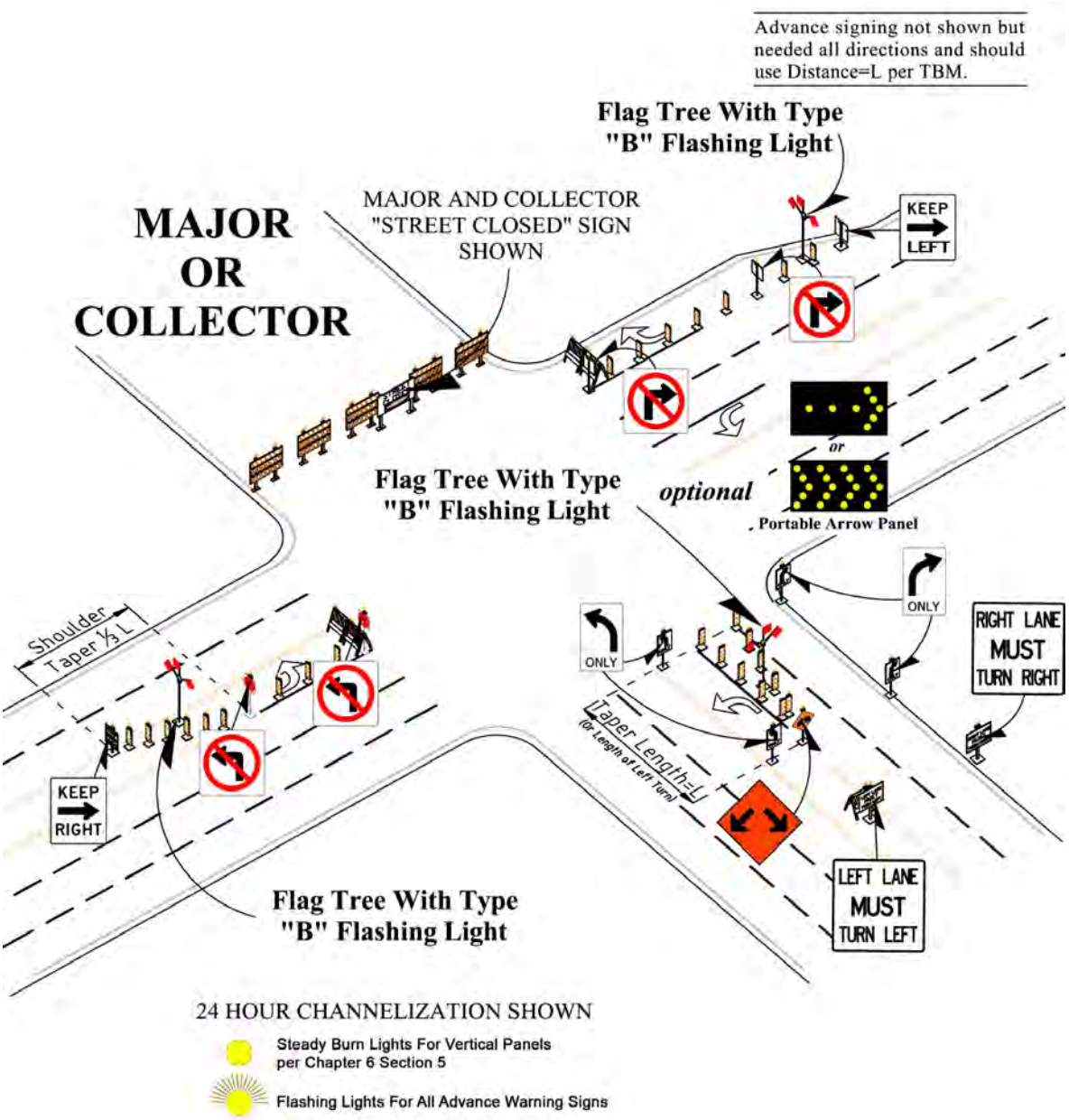

TURN LANE TREATMENTS FOR HARD CLOSURES

Figure 24 – Thru Lane Closed (Maintain Two Lanes – Downtown use)

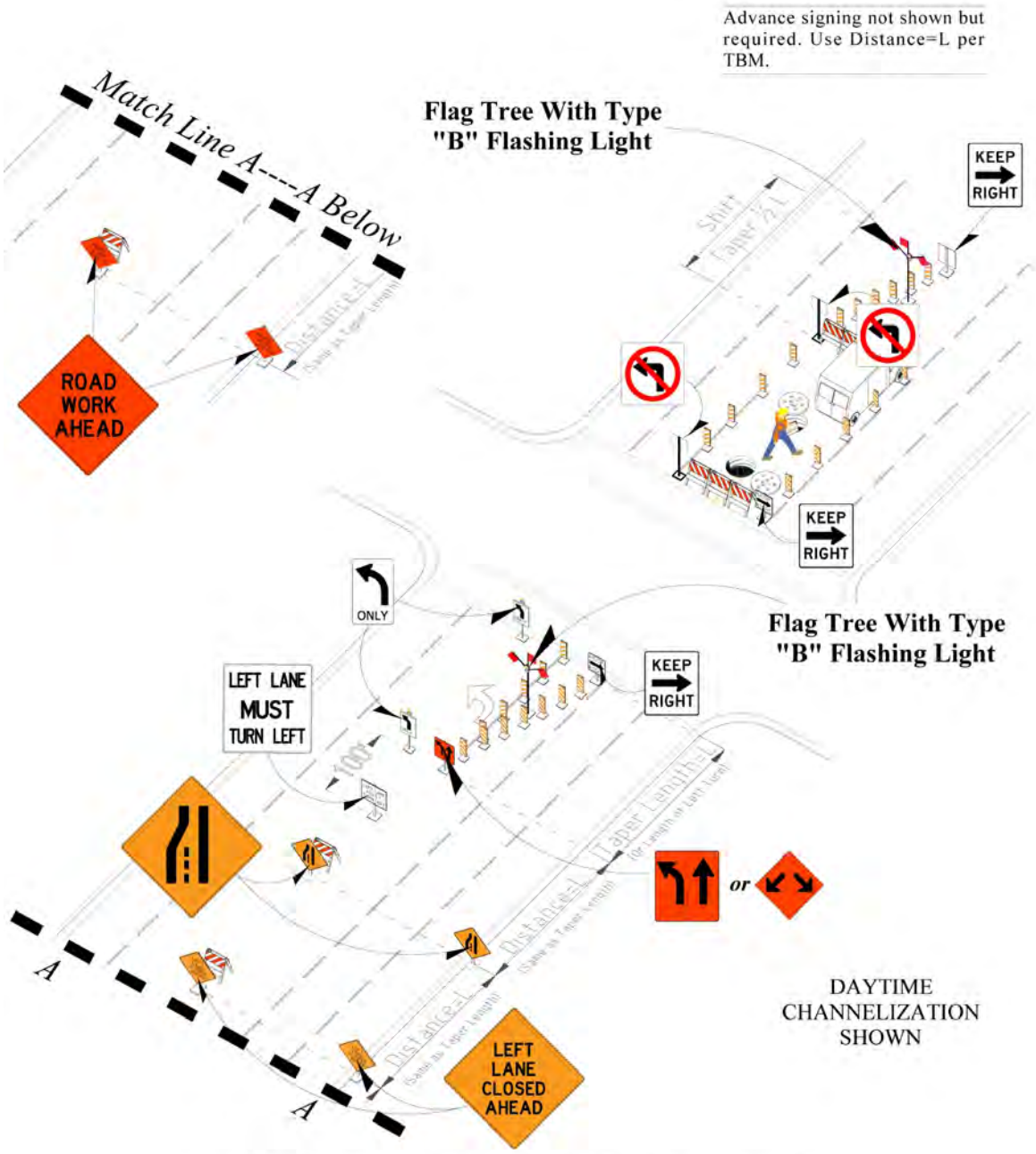

LEFT THRU LANE CLOSED
(Maintain two lanes- Downtown use)

Figure 25 – Left Thru Lane Closed (Maintain two thru lanes by prohibiting left turns)

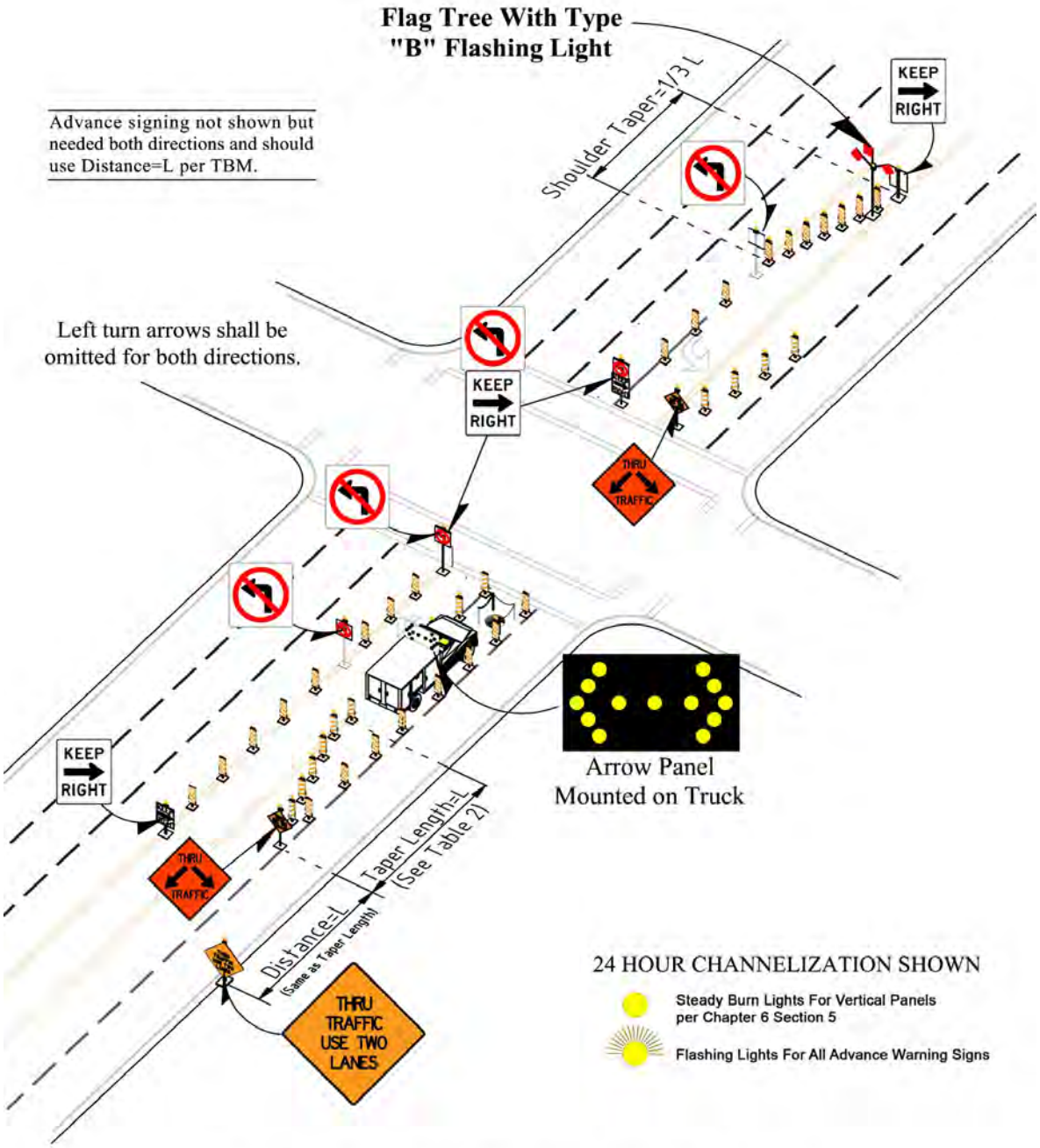

LEFT THRU LANE CLOSED
(Maintain two lanes by prohibiting left turns)

Figure 26 – Mid-block Left Lane Closed – Maintain two lanes using left turn lane

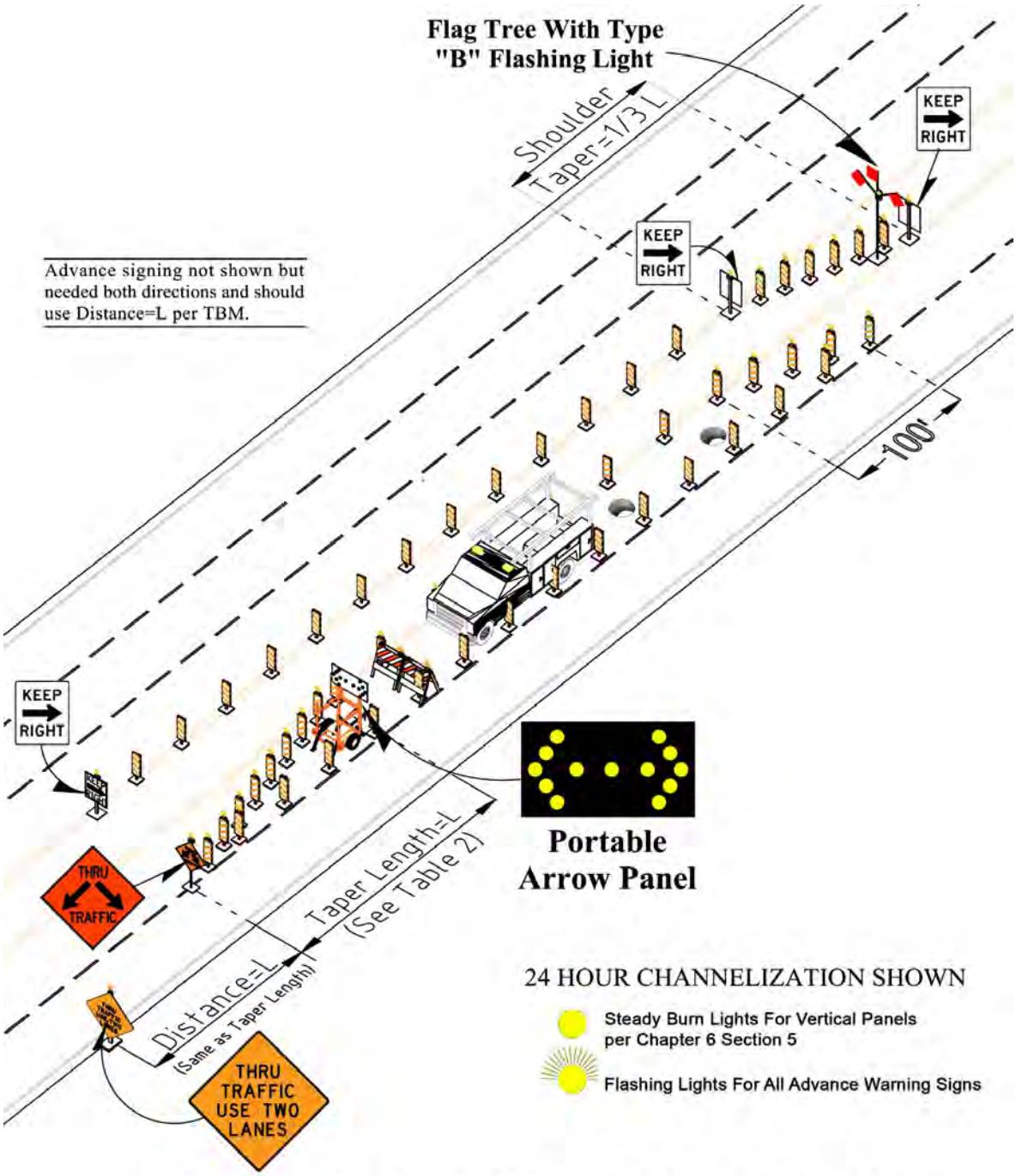

MIDBLOCK LEFT LANE CLOSED
(Maintain two lanes using left turn lane)

Figure 27 – Center Thru Lane Closed (Maintain two thru lanes)

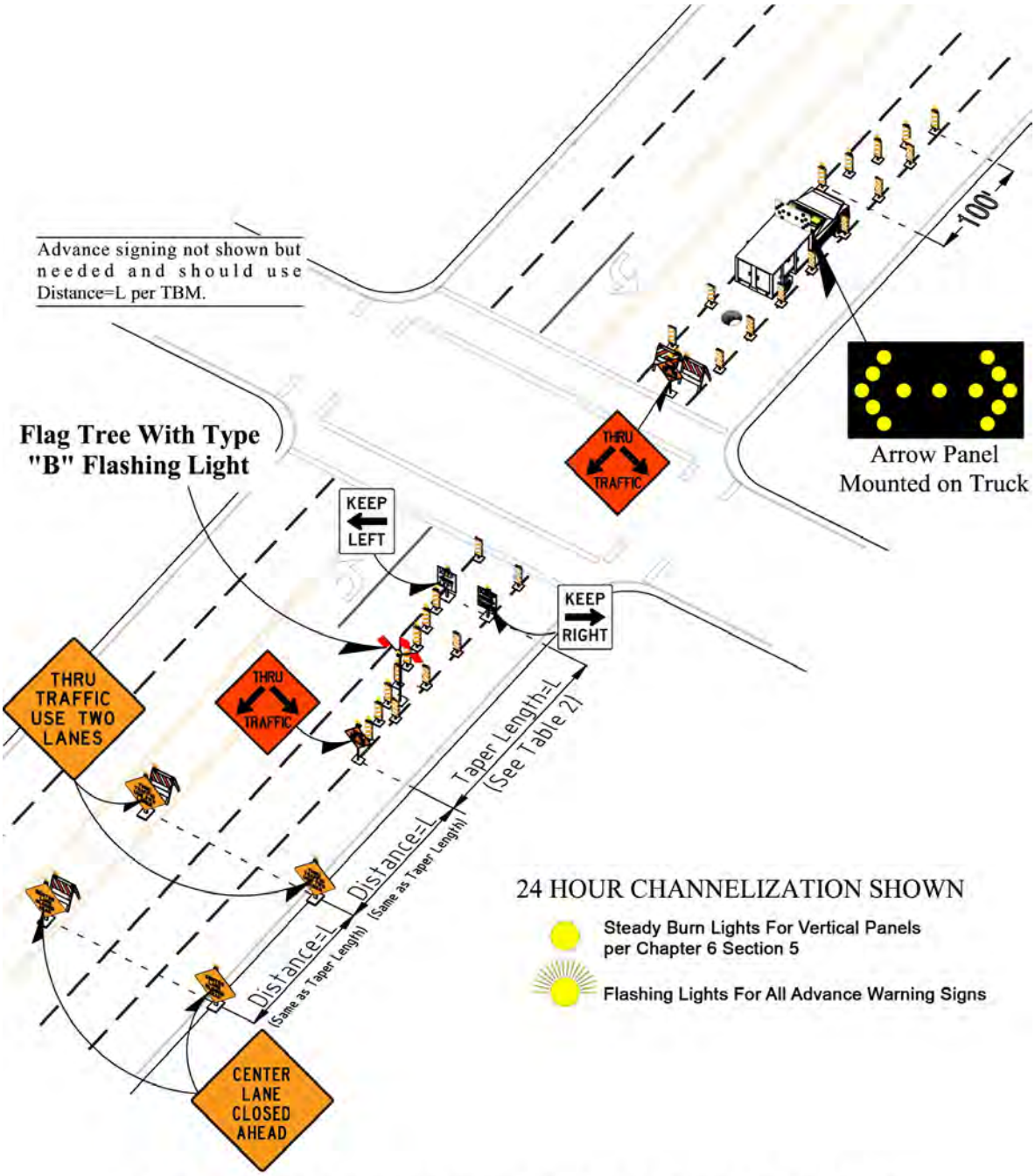

CENTER THRU LANE CLOSED
(Maintain two thru lanes)

Figure 28 – One-Way Street - Right 2 Lanes Closed (Create right turn lane – Downtown use)

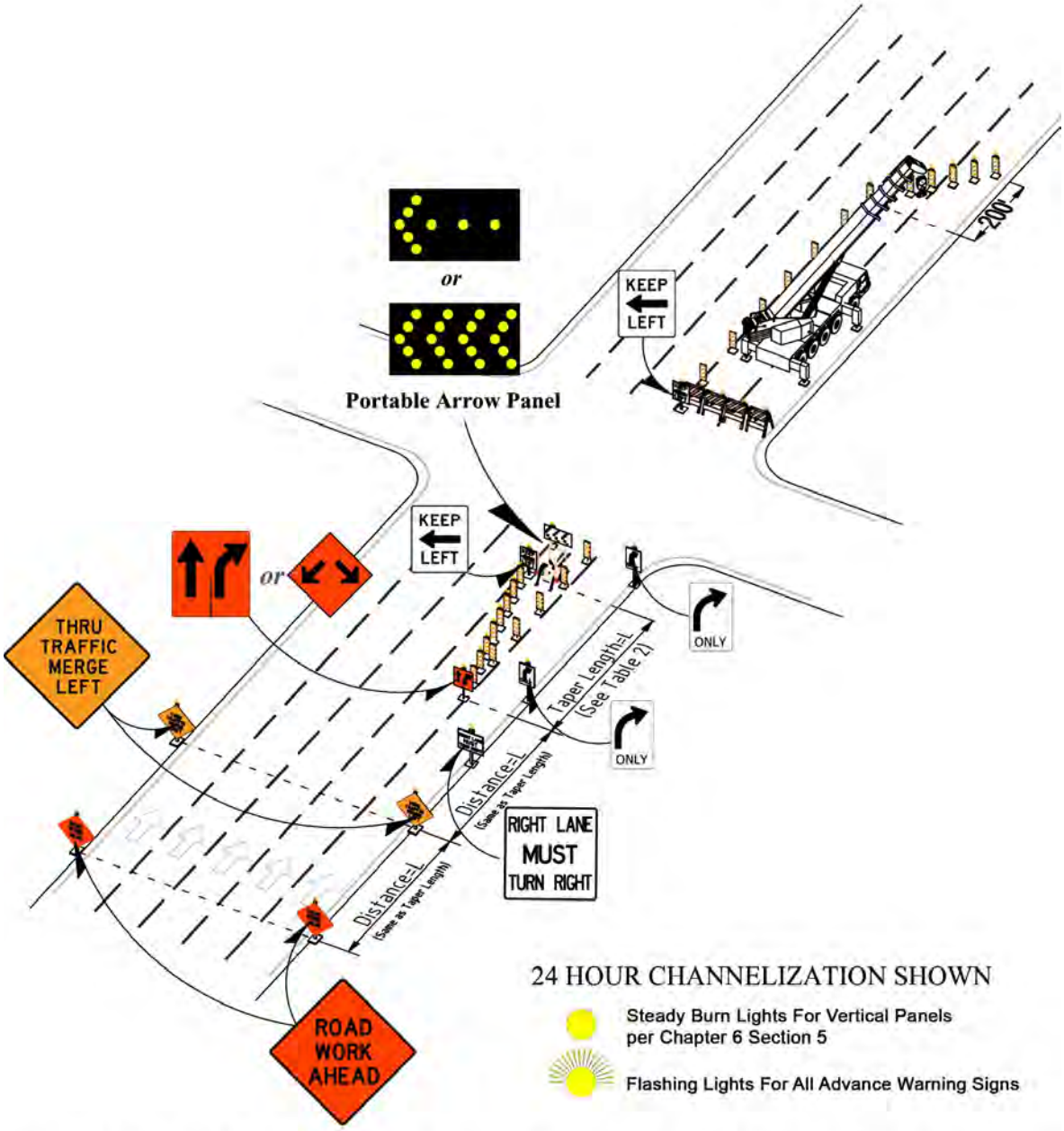

ONE WAY STREET-RIGHT 2 LANES CLOSED
(Create right turn lane- Downtown use)

Figure 29 – Right Curb Lane/Bike Lane Closed (Maintain two thru lanes; end bike lane)

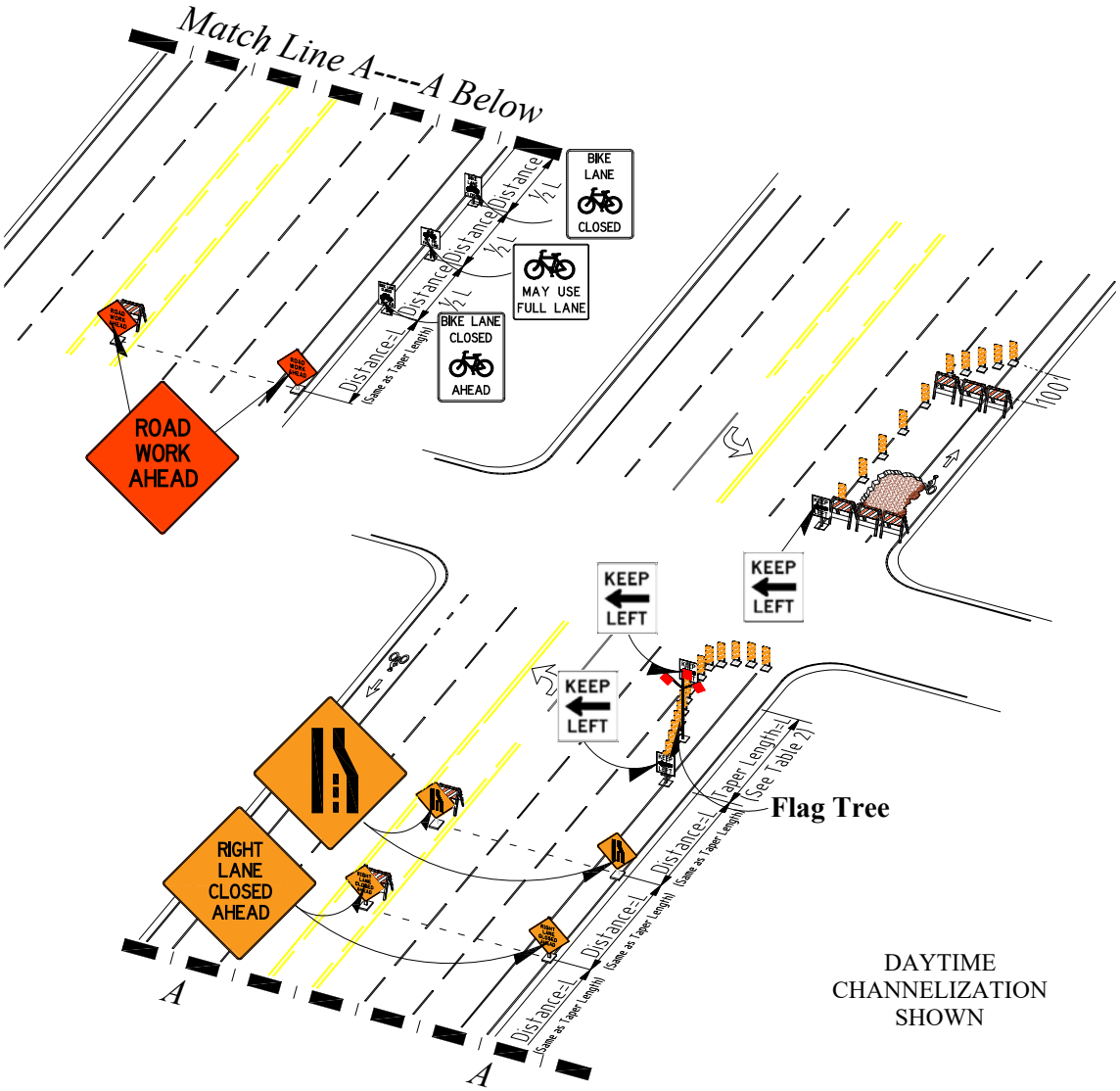

RIGHT CURB LANE/BIKE LANE CLOSED
(Maintain two thru lanes; end bike lane)

Figure 30 – Nearside Thru/Right Lane Closed (Maintain two thru by prohibiting left turns)

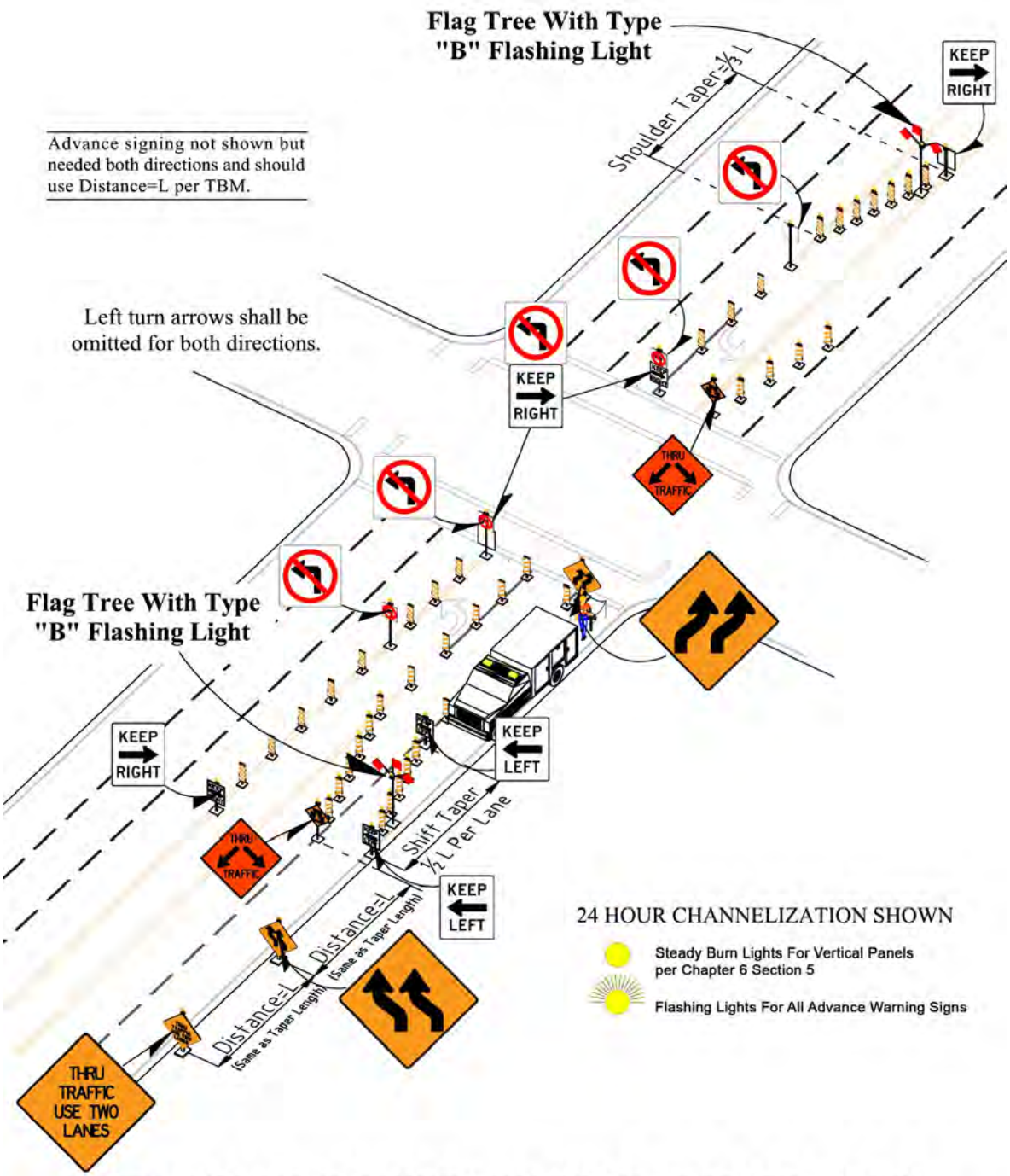

NEARSIDE RIGHT/ THRU LANE CLOSED

(Maintain two lanes by prohibiting left turns)

Figure 31 – Far-side Right Lane Closed (Maintain two lanes prohibiting left turns and create right turn lane)

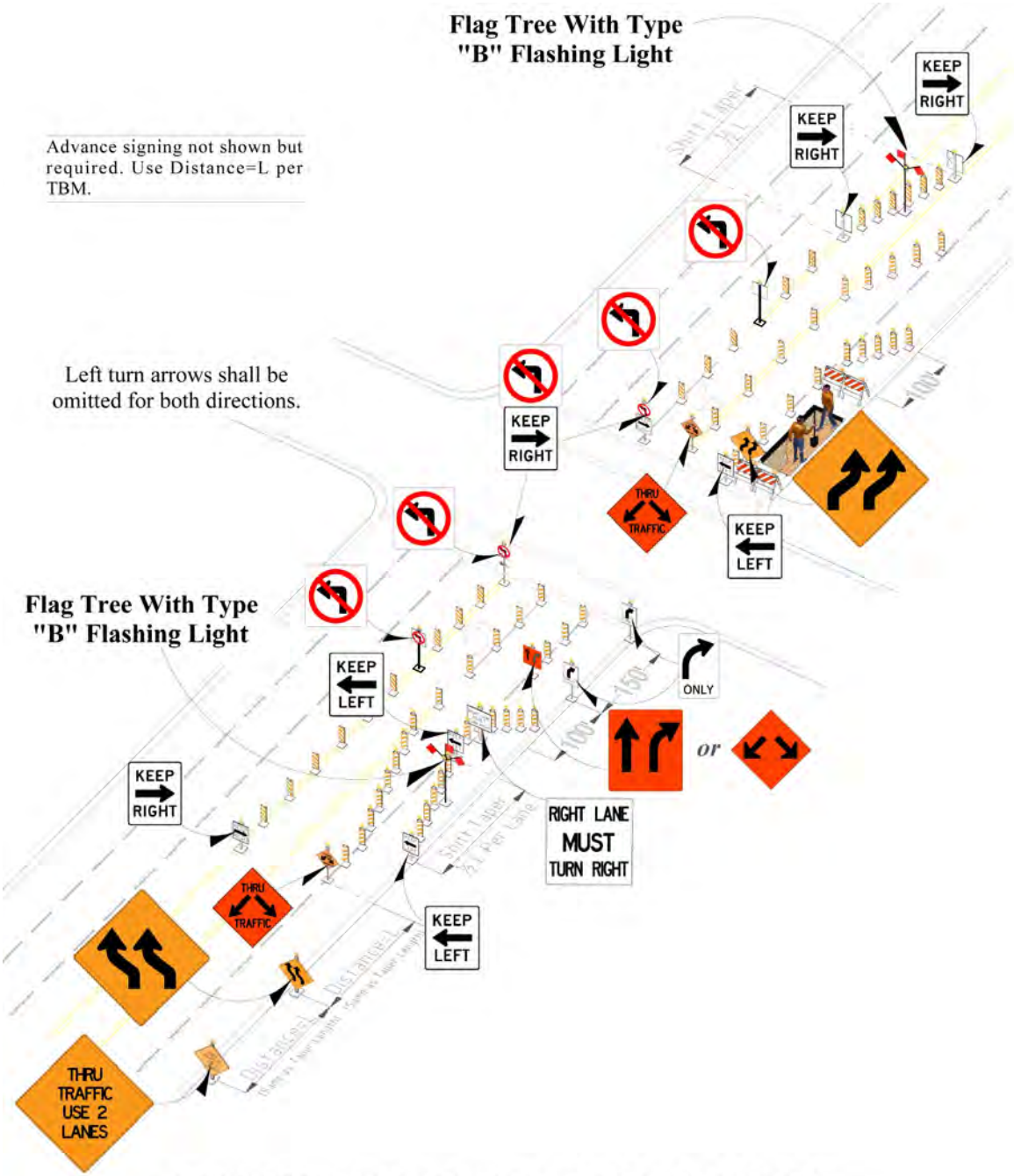

FARSIDE RIGHT LANE CLOSED

(Maintain two lanes prohibiting left turns and create right turn lane)

Figure 32 – Midblock 2 Right Lanes Closed (Maintain one thru lane)

Advance signing not shown but needed both directions and should use Distance=L per TBM.

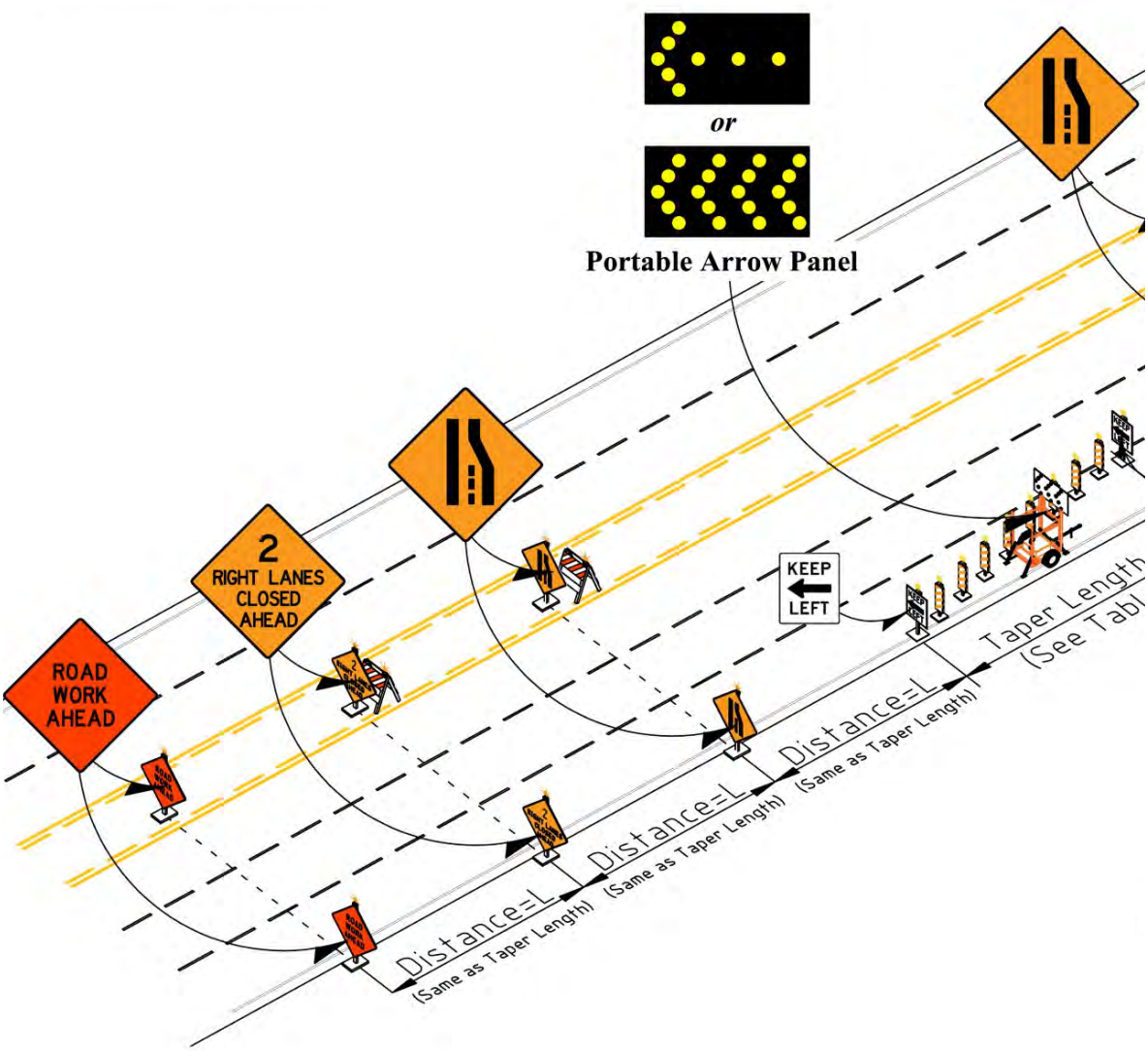

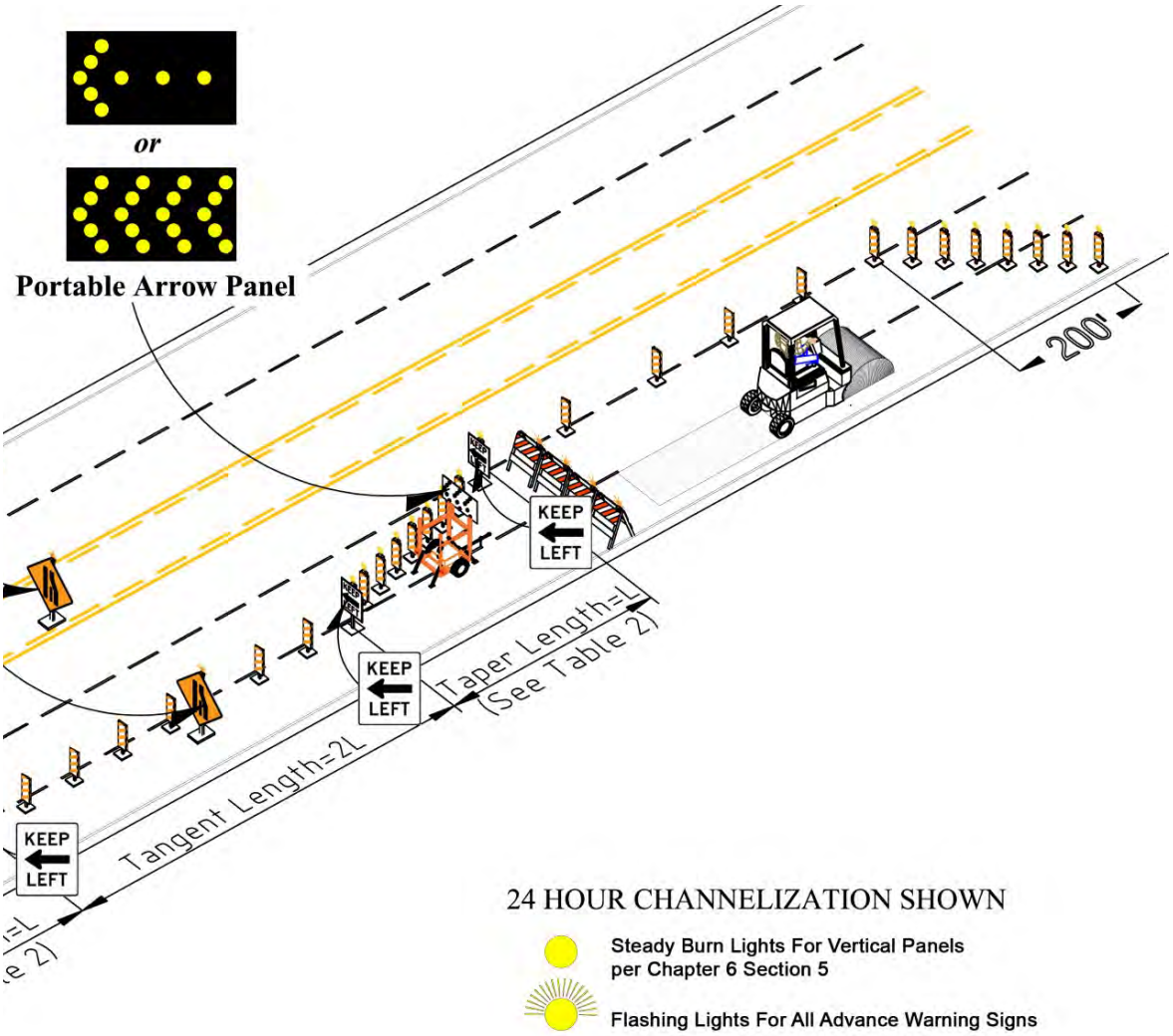

MIDBLOCK TWO RIGHT LANES CLOSED
(Maintain one thru lane)

Figure 33 – Midblock 2 Right Lanes Closed (Maintain two lanes using left turn lane)

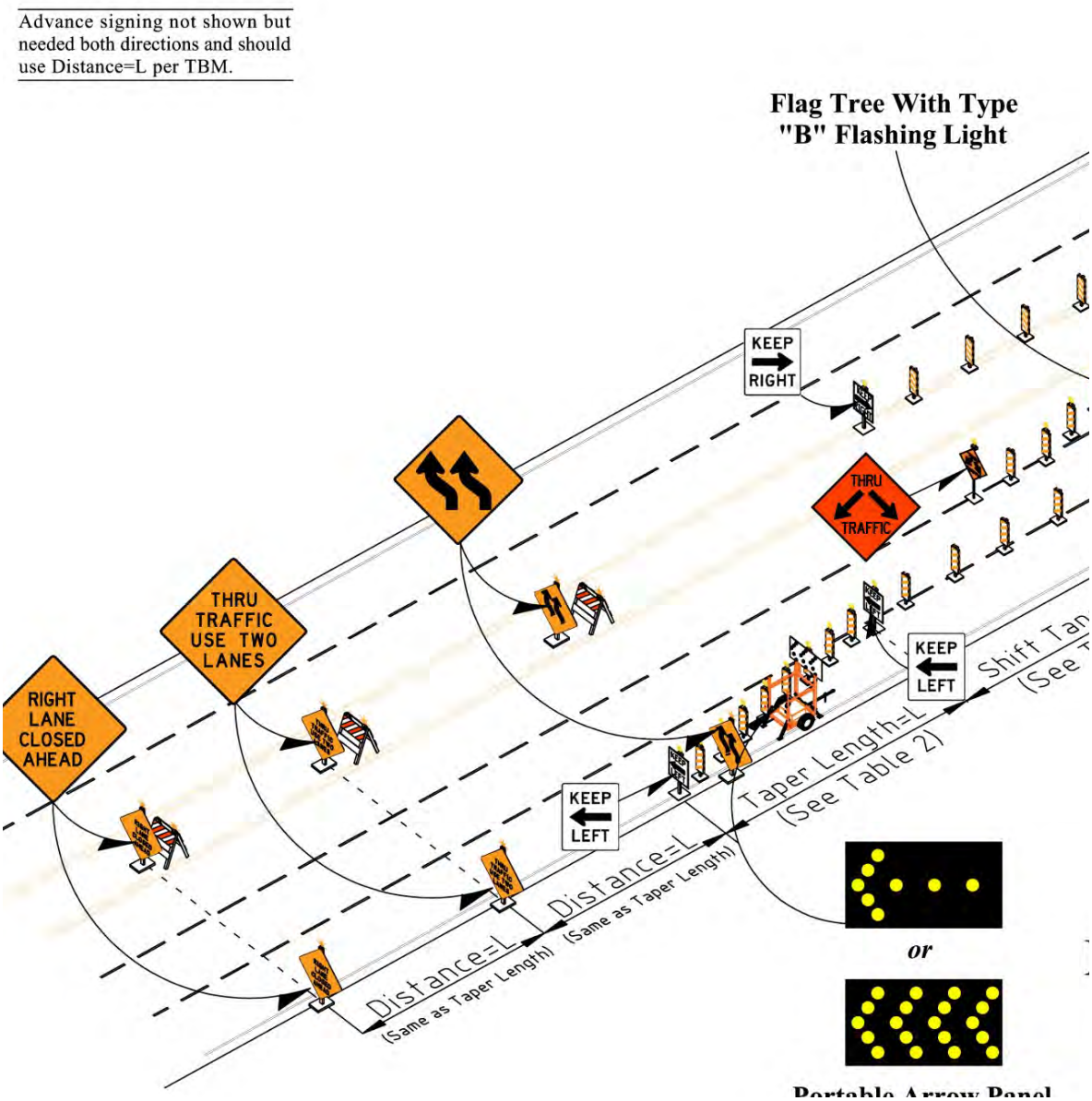

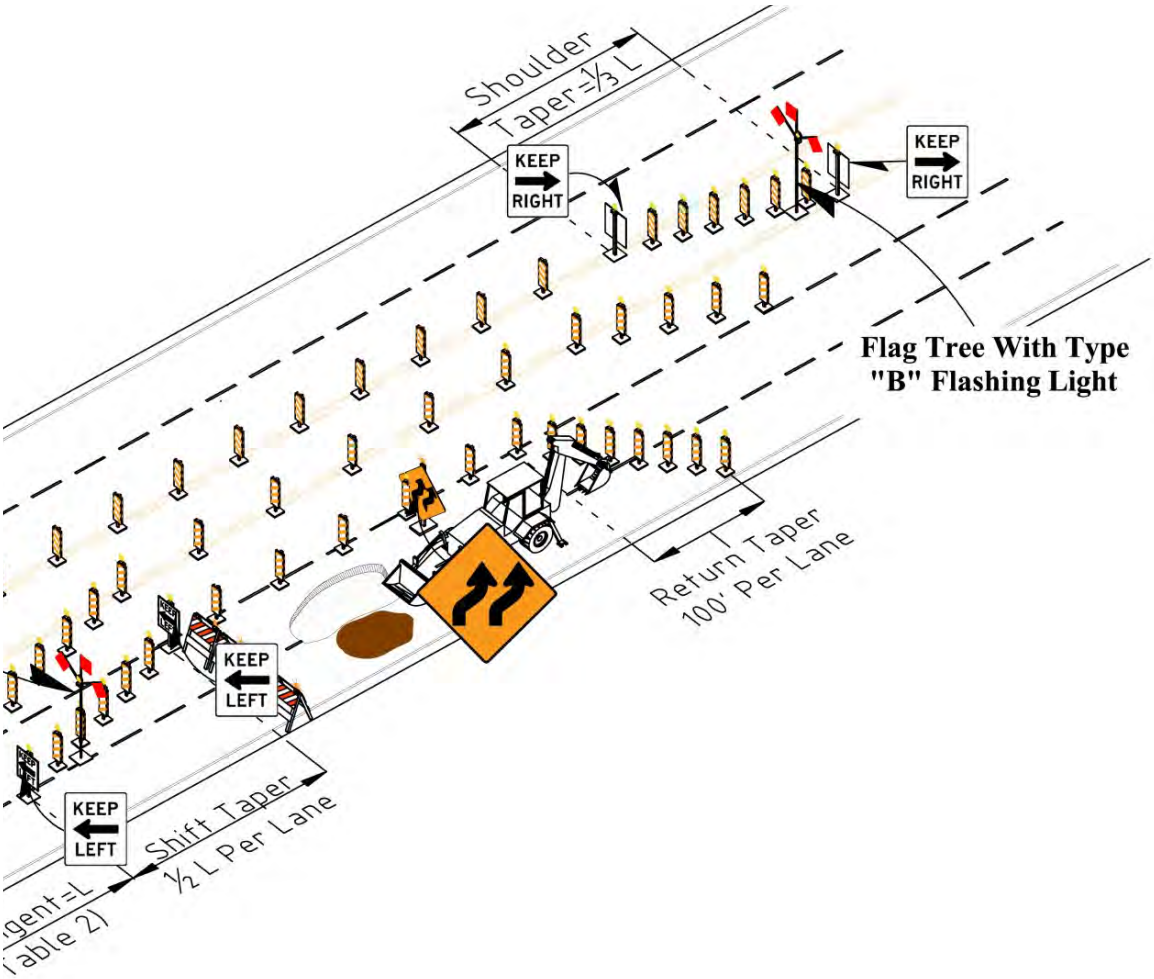

MIDBLOCK TWO RIGHT LANES CLOSED
(Maintain two lanes using left turn lane)

Figure 34 – Entire Direction Closed (Maintain one thru lane across centerline)

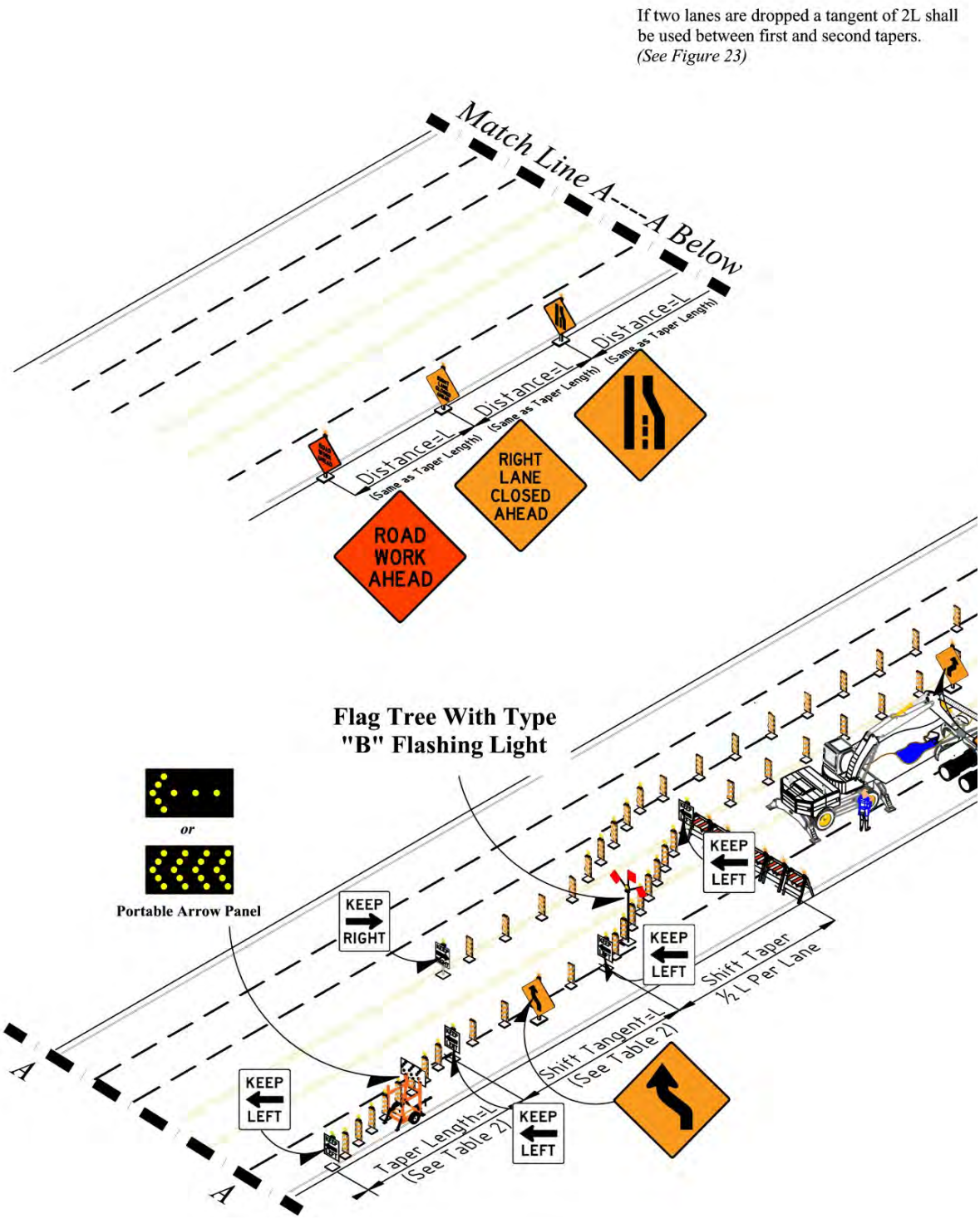

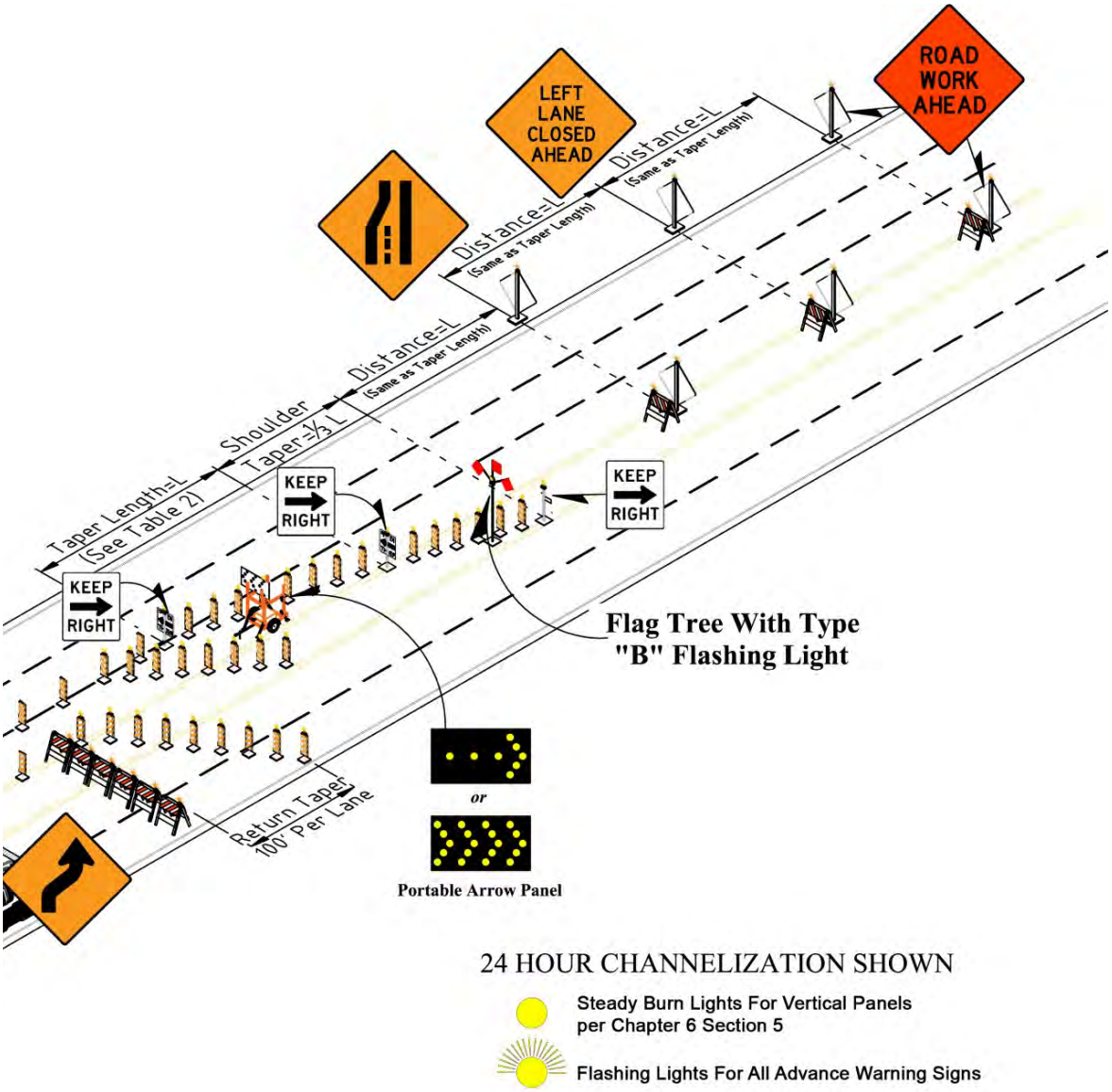

ENTIRE DIRECTION CLOSED
(Maintain one thru lane across centerline)

Figure 35 – Entire Direction Closed (Raised medians – Maintain one thru raised median)

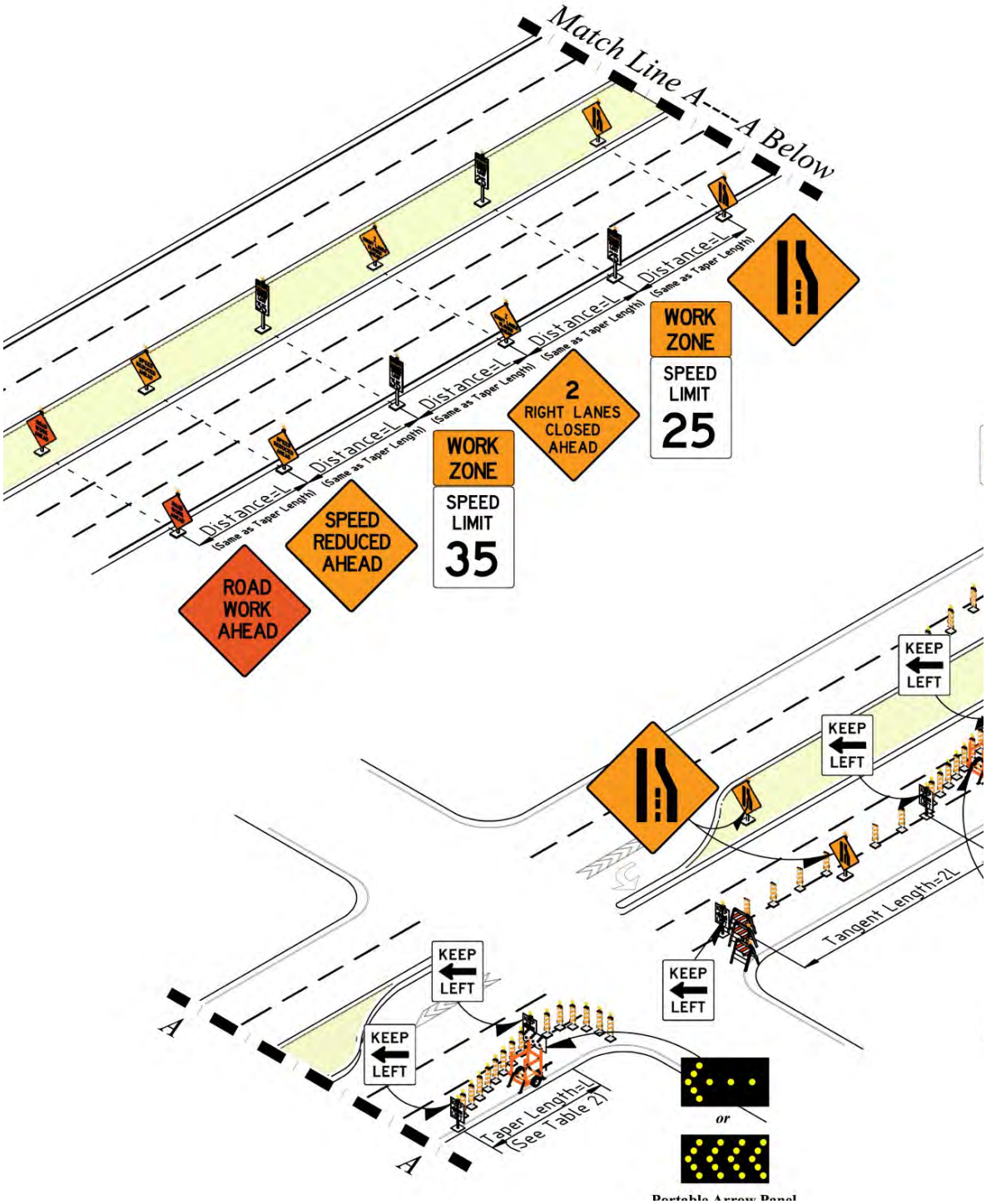

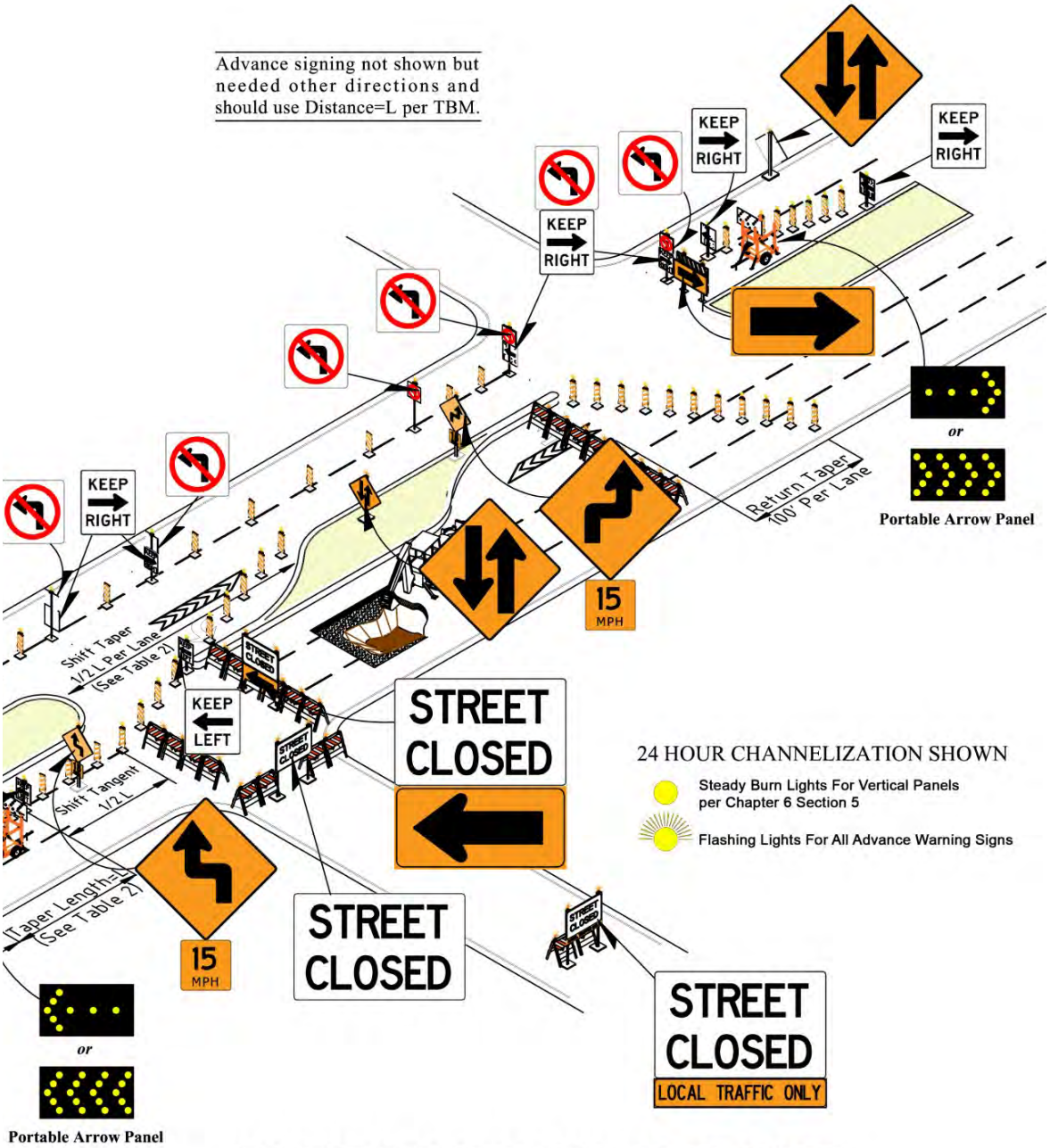

ENTIRE DIRECTION CLOSED (RAISED MEDIANS) (Maintain one lane thru raised median)

Figure 36 – Far-side Bike / Right Lane Closed (Create right turn lane)

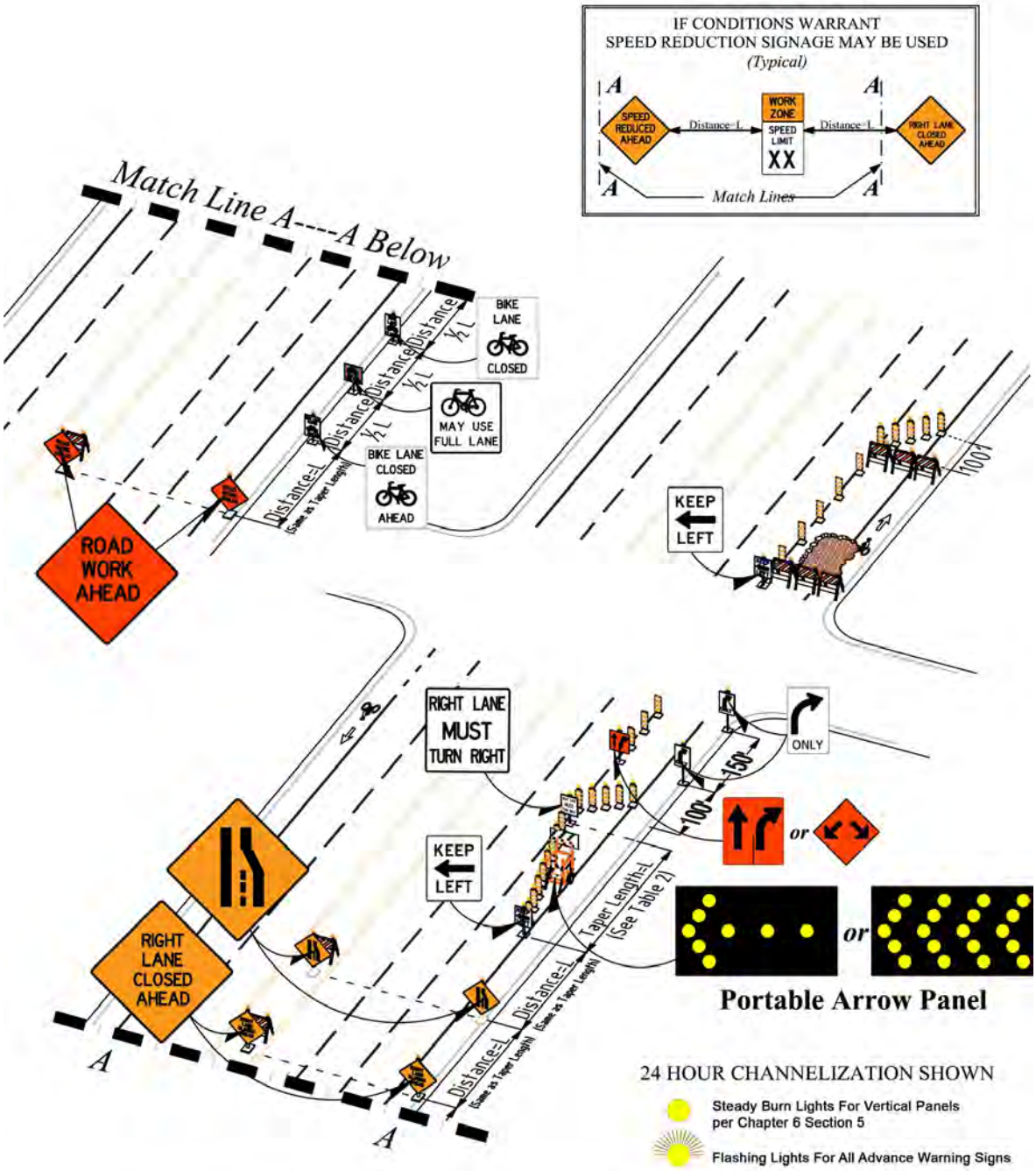

Figure 37 – Far-side Bike / Right Lane Closed (Create right turn lane – Downtown use)

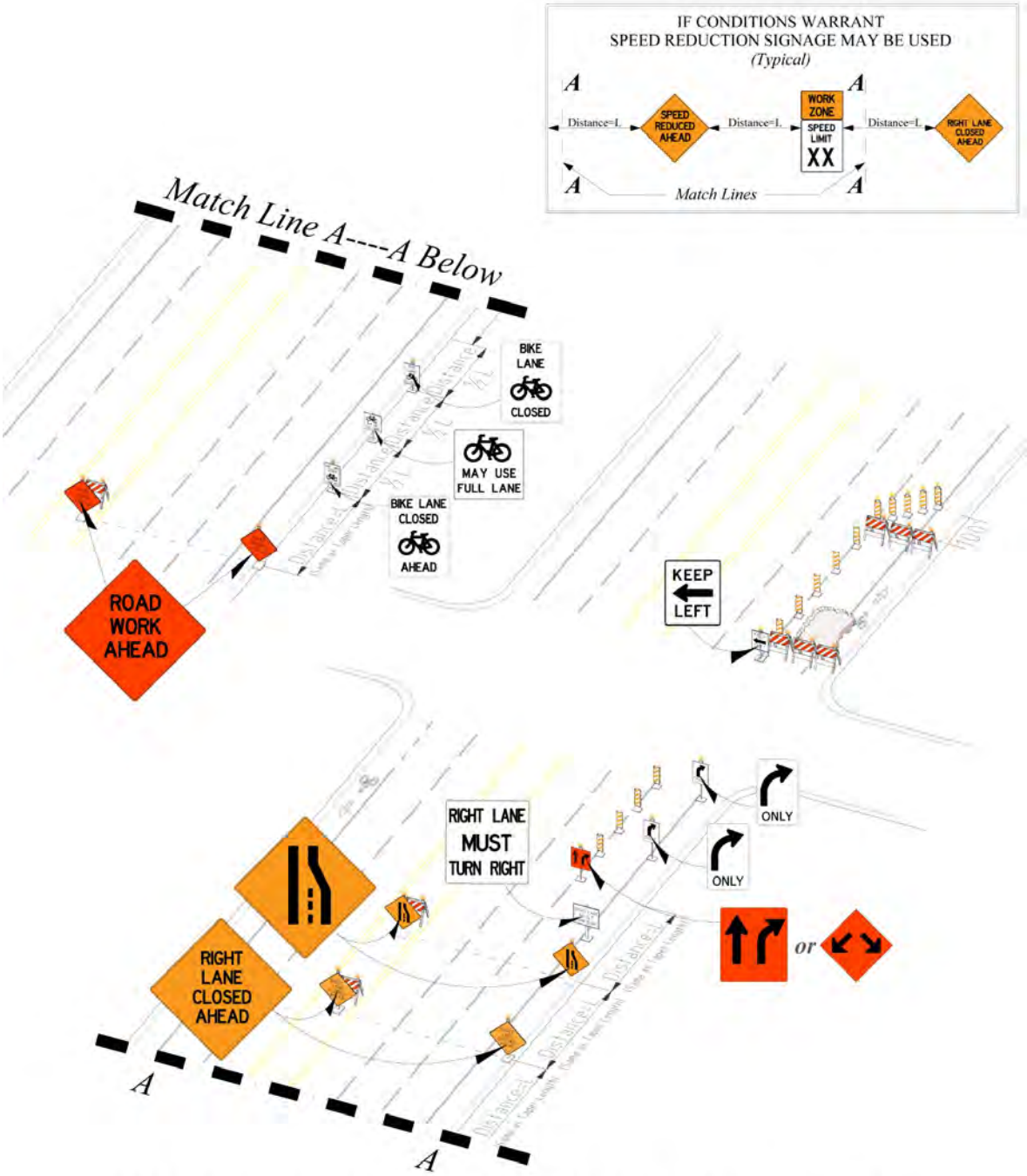

FARSIDE RIGHT/BIKE LANE CLOSED
(Create right turn lane- Downtown use)

Figure 38 – Midblock Bike/Right Lane Closed (Maintain two thru lanes using two-way left turn lane)

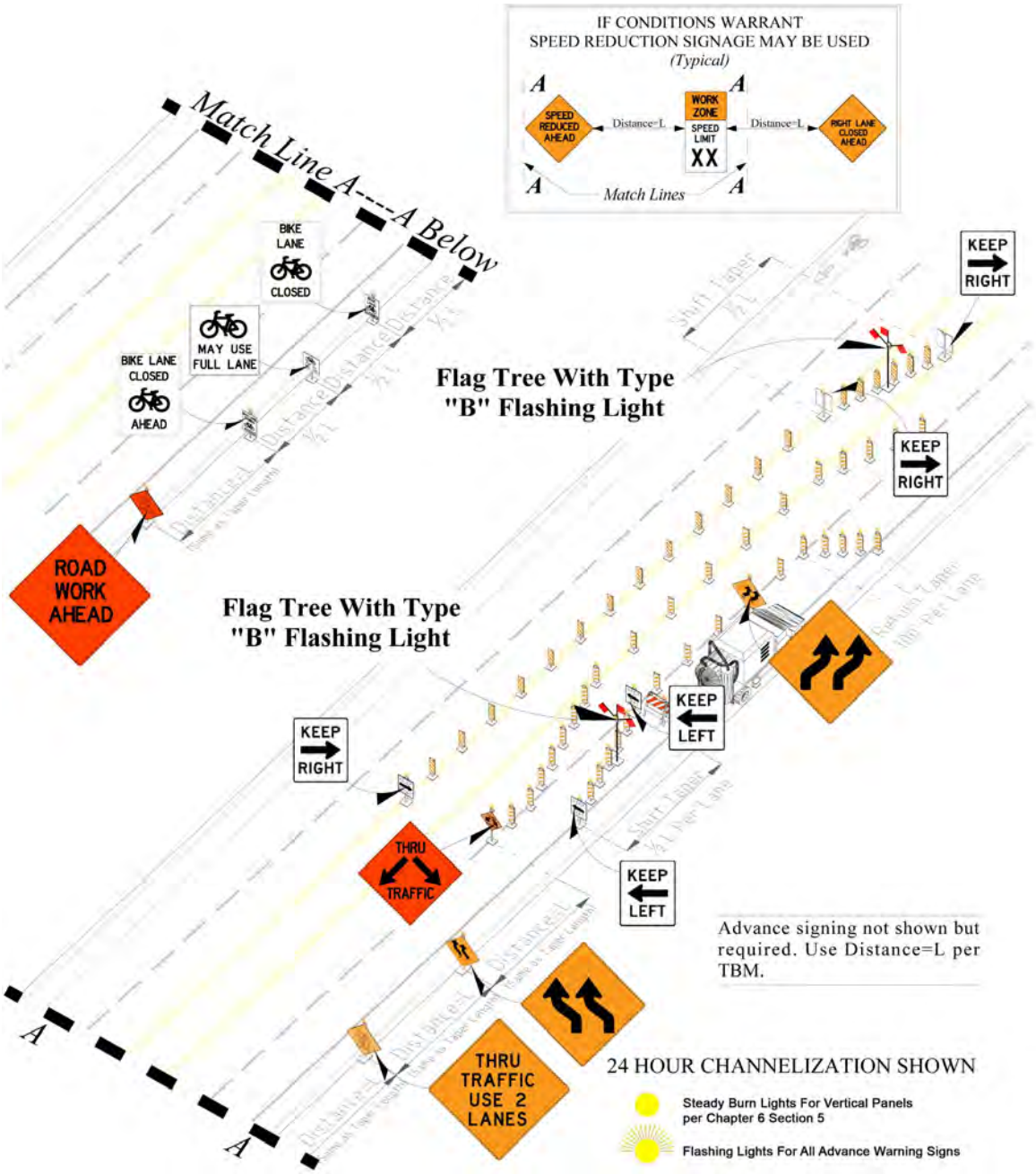

MIDBLOCK BIKE / RIGHT LANE CLOSED
(Maintain two thru lanes using two-way left turn lane)

Figure 39 – Flagging to Facilitate Construction (To stop traffic as needed)

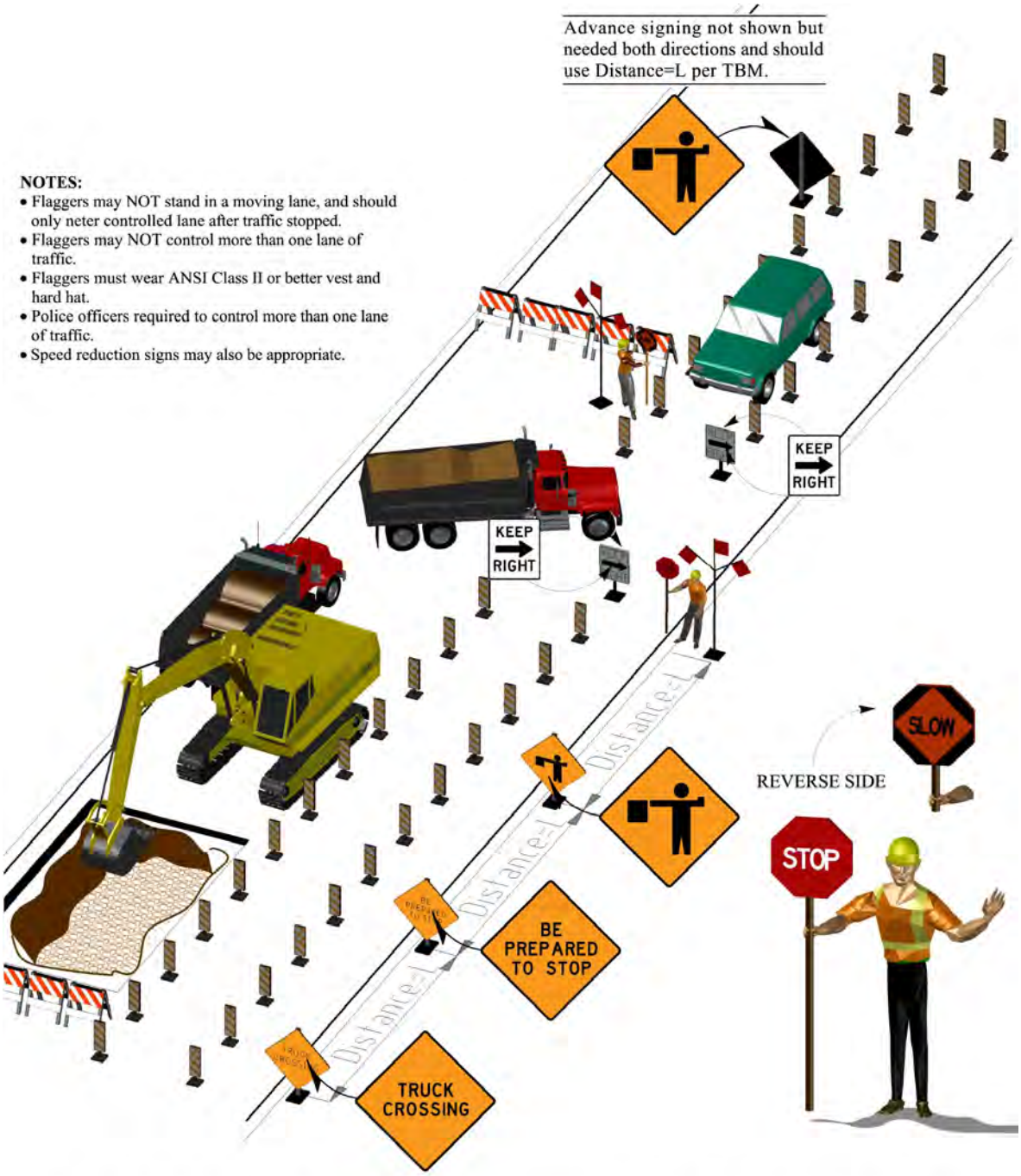

FLAGGING TO FACILITATE CONSTRUCTION
(To stop traffic as needed)

Figure 40 – One Lane Two-Way Traffic using Flaggers (Scene 1: Pre-warners and approach)

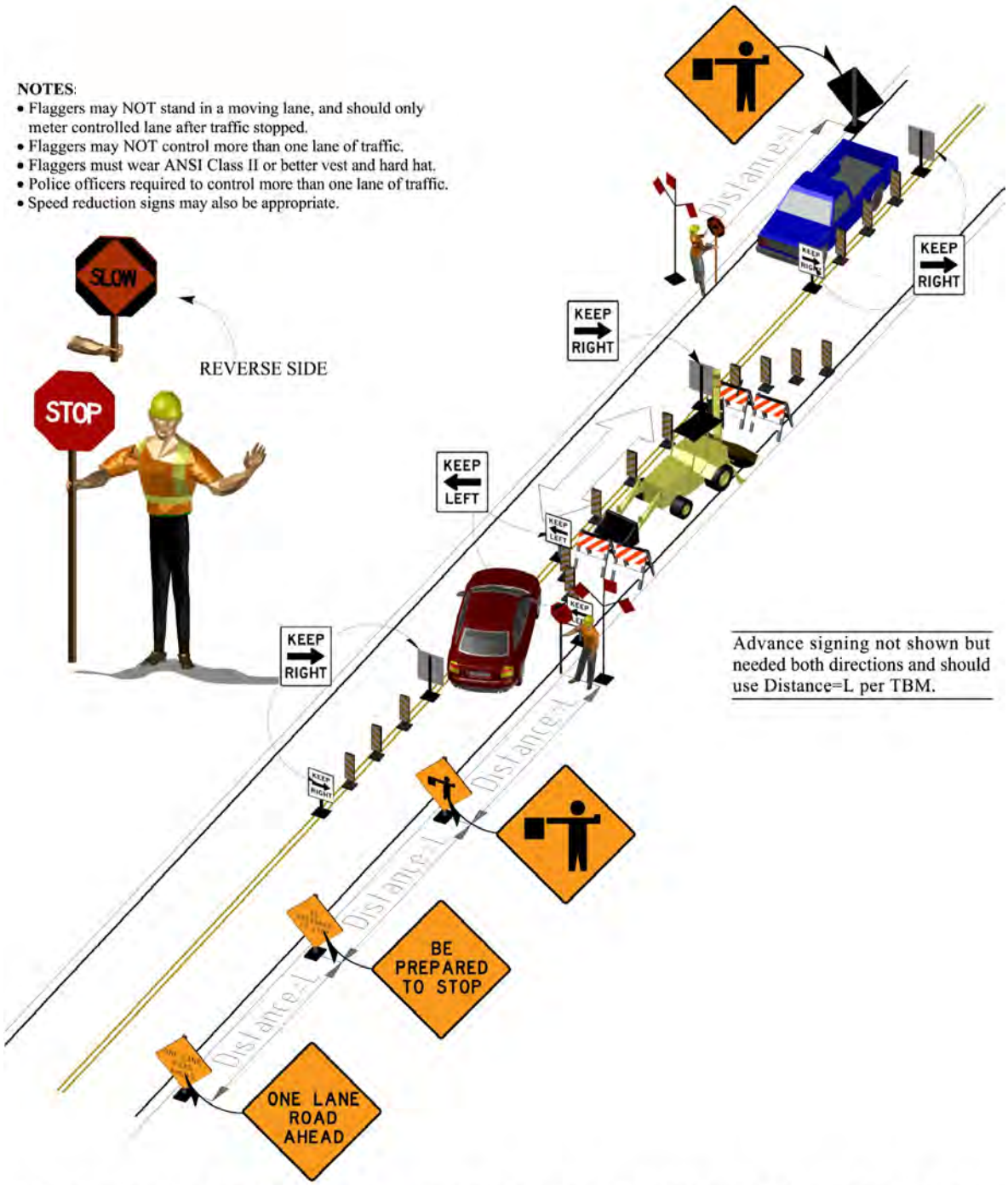

ONE LANE TWO-WAY TRAFFIC USING FLAGGERS
(To control traffic with flaggers)

Appendix A-2

Definitions

ADVANCE NOTICE (FOR PERMIT APPROVAL): Represent the number of days in advance, excluding holidays and weekends, that requestor must provide to ROW Management before being allowed to begin work, typically:

- Minimum 10 days for full closures
- Minimum 48 hours for lane restrictions, except emergencies or other extenuating circumstances – see Chapter 2 Regulations that Govern TRACS Permits for additional information).

ADVANCE PUBLIC NOTICE (TO START WORK): Represents the number of days in advance, excluding holidays and weekends, that the public must be notified before beginning work, as determined by ROW Management staff, typically for dynamic message board placement:

- Minimum 5 days for lane restrictions when required by ROW Management
- 5 - 10 days for full closures

ALLEY (Commercial): Passageways for local access to the rear of lots or buildings in commercial areas. Alleys are not streets or highways, and are not intended for use by through traffic. The junction of an alley with a street does not constitute an intersection.

ALLEY (Residential): Same as above, only for local access to residential land uses.

ARTERIAL STREETS: Streets designated as Major Arterial or Arterial streets on the most current City of Phoenix Street Classification Map on file with the City Clerk. They are generally located at one-mile intervals.

BARRICADE: A device used for channelizing pedestrians or traffic or shielding an area, depending on the application. These may include Type I, II, or III barricades, drums, cones, vertical panels or other acceptable devices.

BICYCLE: A device, including a racing wheelchair, that is propelled by human power and on which a person may ride that has either:

- Two tandem wheels, either of which is more than 16 inches in diameter, or
- Three wheels in contact with the ground, any of which is more than 16 inches in diameter
- Or as referenced in Arizona State Statute 28-101.

BICYCLE LANE: A portion of a roadway designated by signs and/or pavement markings for preferential or exclusive use by bicyclists.

BICYCLE ROUTE: A bikeway designated for use by bicyclists by an authorized agency using appropriate directional guide signs.

BICYCLE BOULEVARD: A low-speed street which has been "optimized" for bicycle traffic. Bicycle boulevards discourage cut-through motor-vehicle traffic but allow local motor-vehicle traffic. They are designed to give priority to bicyclists as through-going traffic.

CHANGEABLE MESSAGE SIGN: A fixed or portable electronic sign that is capable of displaying more than one message, changeable manually, by remote control, or by automatic control.

CHANNELIZING DEVICES: Temporary traffic control devices used in conjunction with one another to guide and warn road users of conditions created by road work, emergencies or special event activities in or very near the roadway. They may be used to divert traffic around temporary obstructions and to guide traffic along their intended path.

CITY FORCES: Work crews (e.g., Water Services Department, Street Maintenance Division, etc.) working in the right-of-way and employed by the City of Phoenix.

CITY PERMITS: There are various types of city permits. The two most common types of permits associated with working in the right-of-way include: (1) TRACS permit issued by the Right-of-Way Management Office and (2) Right of Way Permit issued by Planning and Development to perform construction for private development.

CITY PROJECT: A project performed under contract with the City of Phoenix.

CITY STREETS: Arterial, collector, and local streets in Phoenix. This does not include private streets or state or county-maintained roadways, highways, freeways or expressways.

COLLECTOR STREETS: Streets designated as "Collector" on the most recent Phoenix Street Classification Map on file with the City Clerk. They are generally located at half-mile intervals.

CRASHWORTHY: Traffic control devices that have crash tested successfully through the AASHTO Manual for Assessing Safety Hardware (MASH).

CROSSWALK: That part of a roadway at an intersection included within the prolongations or connections of the lateral lines of the sidewalks on opposite sides of the highway measured from the curbs or, in absence of curbs, from the edges of the traversable roadway or any portion of a roadway at an intersection or elsewhere that is distinctly indicated for pedestrian crossing by lines or other markings on the surface, or as stated in Arizona Revised Statute 28-601.

DAYLIGHT HOURS (DAYTIME): Hours from sunrise to sunset.

DELINEATORS: Retro-reflective devices mounted at the side of a roadway in a series, or on the roadway surface to delineate the alignment of the roadway during hours of darkness. Delineators are for guidance, and are not considered warning devices.

DETECTABLE: Having a continuous edge within six inches of the surface so that pedestrians who have visual impairments can sense its presence and receive usable guidance information.

DETOUR (ROADWAY): A temporary rerouting of road users onto an existing street(s) or a newly created bypass route, in order to avoid a construction, maintenance, emergency or special event area.

DIVERSION: A temporary rerouting of road users. A diversion is created when traffic is rerouted along or through the work zone or other protected area.

EMERGENCY: An event that requires urgent response by the agency or company responding to the emergency. The first responders should leave a message at 602-262-6235 (if emergency is after business hours) and again during business hours to provide the location, type of emergency, and expected duration. Urgent notification to ROW Management is required to coordinate emergency with other nearby traffic restrictions.

ENGINEERING ASSESSMENTS: There are two types; engineering judgment and engineering studies. Both involve evaluation of pertinent information and application of appropriate principles and practices by trained personnel familiar with local conditions to decide the applicability, design, operation, or installation of a traffic control device. Engineering assessments shall be exercised by an engineer, or an individual working under the supervision of an engineer using procedures established by the engineer. Application of engineering judgment does not require documentation. An engineering study needs documentation at the time the study is conducted, but need not be retained forever.

FLAGGER (CERTIFIED): A certified person wearing a vest and hard hat, using a STOP/SLOW paddle, stationed to assist with traffic control in restricted areas. Flaggers are limited to controlling traffic in one traffic lane only and should position themselves outside of the traveled lane until traffic is stopped. Safety apparel requirements are outlined in the MUTCD, Section 6E.02.

INTERSECTION: The area embraced within the prolongation or connection of the lateral curb lines, or if none, the lateral boundary lines of the roadways of two highways that join one another at, or approximately at, right angles, or the area within which vehicles traveling on different highways joining at any other angle may come in conflict. If a highway includes two roadways thirty or more feet apart, each crossing of each roadway of the divided highway by an intersecting highway is a separate intersection. If the intersecting highway also includes two roadways thirty or more feet apart, each crossing of two roadways of the highways is a separate intersection. (Reference, Arizona Revised Statute 28-601.) The junction of an alley with a public street does not constitute an intersection.

INTERSECTION INFLUENCE AREA: An area where traffic may be impacted by intersection operations, usually at least 300 feet in all directions approaching the intersection, especially near traffic signals.

LOCAL STREETS: All minor public streets within the City of Phoenix not otherwise designated as Arterial or Collector Streets on the Phoenix Street Classification Map.

MAJOR SHOPPING CENTER: A large, regional, high-volume retail indoor or outdoor mall, as specifically defined in the annual holiday moratorium letter to right-of-way users.

MAJOR STREET: Streets designated as Major Arterial on the most current City of Phoenix Street Classification Map.

MULTIPLE LANES: Two or more through traffic lanes in any one cardinal direction.

NIGHTTIME HOURS : Hours from one-half hour after sunset to one-half hour before sunrise, and any other time when persons or objects may not be clearly discernible at a distance of five hundred feet.

OFF-PEAK TRAFFIC HOURS: Times not defined as “peak traffic hours.” Hours between 8:30 a.m. to 4:00 p.m. (reduced to 9:00 a.m. on Reverse Lane streets) and 6:30 p.m. to 6:00 a.m., Monday through Friday.

PAVED: A mixed, bituminous concrete, or Portland cement concrete roadway surface that provides both structural strength (weight bearing) and a seal.

PEAK TRAFFIC HOURS: Hours between 6:00 a.m. to 8:30 a.m. (extended to 9:00 a.m. on Reverse Lane streets) and 4:00 p.m. to 6:30 p.m., Monday through Friday.

PEDESTRIAN: . Any person afoot. A person who uses an electric personal assistive mobility

device or a manual or motorized wheelchair is considered a pedestrian unless the manual wheelchair qualifies as a bicycle. For the purposes of this definition, "motorized wheelchair" means a self propelled wheelchair that is used by a person for mobility (ARS §28-101.41).

PEDESTRIAN ESCORT (WORK ZONE): A person wearing proper apparel such as a vest and hat, using a flag and/or STOP paddle to gain motorist attention, and stationed to assist with pedestrian traffic control in restricted areas.

PEDESTRIAN FACILITIES: A general term denoting improvements and provisions made to accommodate or encourage walking and wheelchair use.

PEDESTRIAN HYBRID BEACON (PHB): A PHB is a special type of hybrid beacon used to warn and control traffic at an un-signalized location to assist pedestrians in crossing a street or highway at a marked crosswalk.

PERMIT HOLDER: Contractors, utility companies, city crews, or any other person authorized to work in the city right-of-way.

POLICE DEPARTMENT: The City of Phoenix Police Department.

POLICE OFFICER: A uniformed City of Phoenix, Maricopa County Sheriff's Office, or Department of Public Safety (including State Capitol Police) law enforcement officer, on-duty or off-duty, duly authorized to enforce the Arizona Revised Statutes and the Phoenix City Code in the City of Phoenix.

PUBLIC RIGHTS-OF-WAY (ROW): All land in the City of Phoenix dedicated and/or expressly reserved for transportation purposes such as vehicular, light rail, bicyclist and pedestrian traffic and/or installation and maintenance of utilities.

RAISED PAVEMENT MARKER: A device mounted on or in a road surface that has a height generally not exceeding approximately 1 inch above the road surface for a permanent marker, or not exceeding approximately 2 inches above the road surface for a temporary flexible marker, and that is intended to be used as a positioning guide and/or to supplement or substitute for pavement markings.

REGULATORY SIGN: A sign giving notice to road users of traffic laws or regulations.

RESTRICTION (STREET OR SIDEWALK): Any reduction to the normal flow/access of vehicular, bicyclist or pedestrian traffic in the public ROW.

RETROREFLECTIVITY: A surface property that allows a large portion of the light coming from a point source to be returned back to that source.

REVERSE (REVERSIBLE) LANE: A traffic lane marked by double dashed yellow lines, usually at or near the center of a street, used during certain weekday peak hours for through traffic in opposing directions and other hours as a two-way left-turn lane (e.g., 7th Avenue and 7th Street).

RIGHT-OF-WAY MANAGEMENT (ROW Management): A City of Phoenix program within the Street Transportation Department – Traffic Services Division (formerly Traffic Operations Division) established in 2004. Its goal is to enhance traffic safety and mobility by minimizing unauthorized/improper street and sidewalk restrictions without delaying projects.

RIGHT-OF-WAY MANAGEMENT INSPECTOR: Chief Construction Inspectors in the Right of Way Management Section authorized to carry out the goals and objectives of the Right of Way Management program and issue Notices-of-Violation to right of way users.

RMP: The Right of Way Management Program

RMP Administrator: The Construction Inspections Supervisor(s) designated to administer the Right of Way Management Program.

ROADWAY (TRAVELED WAY): That portion of street ordinarily used for vehicular travel, bicycles and parking, but exclusive of the sidewalk, berm, or shoulder, even though these areas may be used by persons riding bicycles or other human-powered vehicles.

SOLID WASTE DIVISION: The Solid Waste Division for the Phoenix Public Works Department.

SIDEWALK: That portion of a street between the curb line, or the lateral line of a roadway, and the adjacent property line or on easements of private property intended for use by pedestrians. In temporary traffic control zones, accessible temporary sidewalk detours/diversions are to be constructed and maintained similar to the sidewalk it replaced.

SCHOOL: A public or private educational institution recognized by the State Education Authority for one or more grades K-12 or as otherwise defined by the state.

SCHOOL ZONE: A designated roadway segment approaching, adjacent to, and beyond school buildings or grounds, or along which school related activities occur.

SPECIAL TRAFFIC REGULATIONS: "Special Traffic Regulations" included in the City Project specifications, or attached to City Permits, prepared by the Street Transportation Department for the specific traffic situations detailed therein.

STATE: State of Arizona.

STREET: A general term for denoting a public way for the purpose of vehicular, bicycle, and pedestrian travel, including the entire area within the ROW.

STREET TRANSPORTATION DEPARTMENT: The Phoenix Street Transportation Department.

TRAFFIC: Pedestrians, ridden or herded animals, vehicles and other conveyances either singly or together while using a highway for purposes of travel (ARS §28- 601.28).

TRAFFIC SIGNAL: Any electronic traffic control device using green, yellow and red indications and by which traffic is alternately directed to stop and permitted to proceed.

TRAFFIC CONTROL DEVICES: Signs, traffic signals, markings, barricades, and channelizing devices used to regulate, warn, or guide traffic by the authority of a public agency having jurisdiction. Traffic control devices are to be in substantial conformance with those illustrated in this TBM or in the Manual on Uniform Traffic Control Devices.

TRAFFIC SIGNAL SHOP: The Traffic Signal Shop of the Street Transportation Department, Operations Traffic Services Division 602-262-6021. (24 hours)

WARNING SIGN: A sign that gives notice to road users of a situation that might not be readily apparent.

WEEKDAYS: Days of the week, starting at 6:00 a.m. on Monday, and ending at 6:30 p.m. on Friday.

WEEKENDS: Days of the week starting at 6:30 p.m. Friday and ending at 6:00 a.m. on Monday.

Appendix A-3

Emergency Contact Information

(All numbers, unless indicated otherwise, have a "602" prefix)

To report temporary traffic control signs or barricades in poor condition or inappropriately positioned, call the RMP Hotline at (602) 262-6235 or e-mail: RMP@phoenix.gov.

When an emergency occurs, such as a street cave in, water line or gas line break, damaged sewer, telephone, or electric lines, the first responders shall notify the affected agencies immediately, followed up by a TRACS permit request.

During the normal workweek, the following agencies shall also be notified:

City of Phoenix City Operator ..... 262-6011 or 262-6300

Police Department ..... 911 or 262-6151

Street Transportation Department:

Street Maintenance Dispatch 19 262-6441

Traffic Signal Dispatch 262-6021

Right of Way Management 262-6235

Utility Inspection Section 534-1400

Design & Construction Management 495-2050

During weekends, holidays, and nights when the above offices are closed, the following shall also be notified.

The following City of Phoenix telephone numbers may be useful:

Planning and Development Department

Construction Permits 262-7811

Fire Department ..... 911 or TTY 495-5555

Police Department, (Off-Duty Officers) 262-7626

Public Works Department 262-7251

Solid Waste Division 262-7251

Public Transit 262-7242

Street Transportation Department 262-6284

Street Closures 262-6235

Traffic Signal Underground Location 262-6204

Water Services Department 262-6251

Water Distribution 262-6509

Wastewater Collections 262-6691

Other Agencies:

Arizona Department of Transportation 712-7355

ADOT Central District Office (Construction) 712-8965

ADOT Central District Maintenance Office 712-6664

Arizona Department of Public Safety 223-2000

Arizona Public Service Company 371-7171

APS Emergency (Except outages) 258-5483

Blue Stake, Underground Utility Locations 811

Century Link Communications 1-800-244-1111

Cox Communications 623-594-1000

Kinder Morgan Pipeline 278-8564

Maricopa County Department of Transportation 506-8600

Maricopa County Sheriff's Office 876-1011

Rural Metro Fire Department 480-945-6311
..... 1-800 352-2309

Salt River Project (Electric Costumer Service) 236-8888

Irrigation Water 236-3333

Power emergencies 236-8811

Southwest Gas Company 271-4277

METRO (Valley METRO or METRO Light Rail) 253-5000

Americans with Disabilities Act (ADA) Information

Upon request, this publication can be made available in Braille, large print, or audiocassette tape by contacting the Street Transportation Department at (602) 262-6284 or at TTY (602) 256-4286

History of the Manual

1961

1965

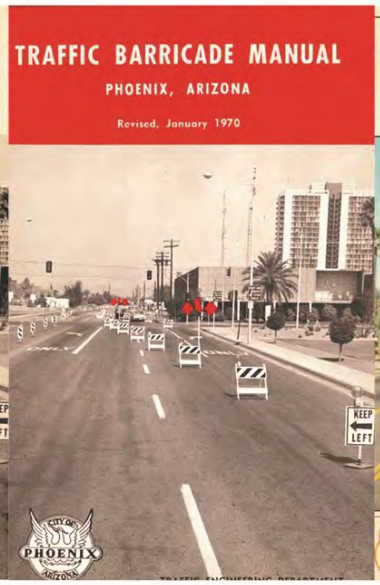

1970

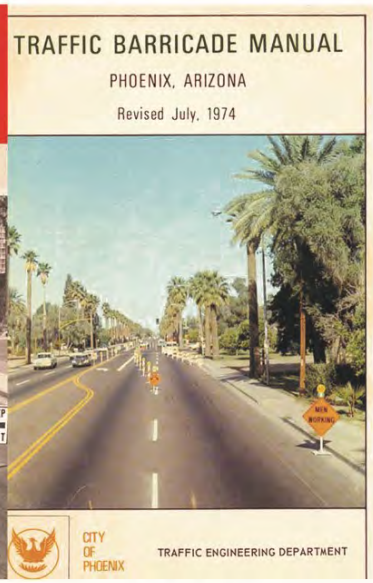

1974

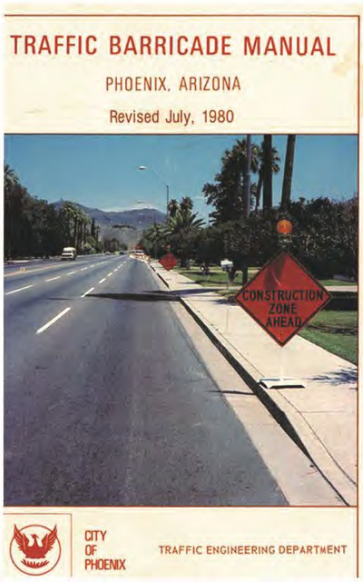

1980

1989

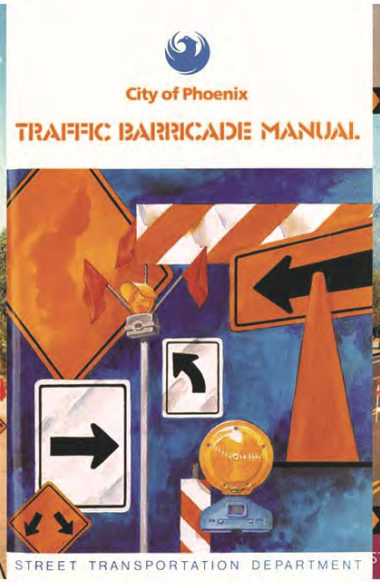

1998

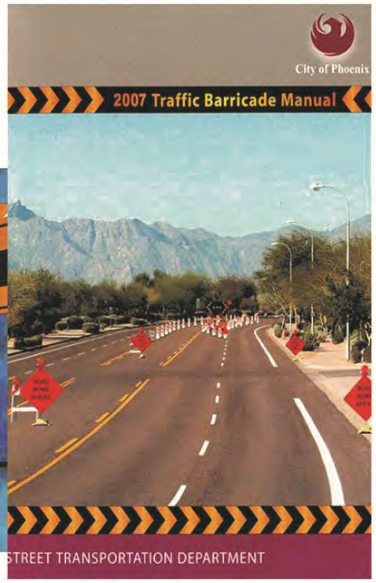

2007

City of Phoenix
STREET TRANSPORTATION DEPARTMENT

APPENDIX N
MCDOT PAVEMENT MARKING MANUAL

2.1 Plan Symbol Coding

The MUTCD categorizes pavement markings as longitudinal, or tranverse markings. Longitudinal markings include: center lines, lane lines, edge lines, and dotted lines. Tranverse markings include: diagonal lines, stop lines, crosswalk lines, arrows, legends, and symbols. The meaning of these longitudinal and tranverse markings are denoted by their color, line type, line width, and the pavement marking pattern. The following examples outline the plan symbol coding.

Example 1

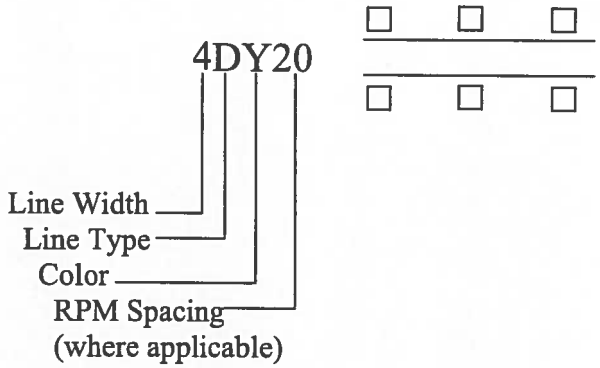

4" Solid Double Yellow Line
with Type 'D' RPM's @ 20' Spacing

Example 2

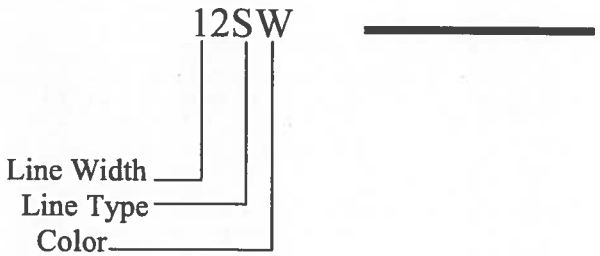

12" Solid White Line

The plan symbol codes are attached for reference and used throughout this document. These plan symbol codes simplify the pavement marking standard details. The plan symbols shall be used when preparing pavement marking plans.

RAISED PAVEMENT MARKER TYPES

LEGEND:

Type A = White (non reflective)

Type AY = Yellow (non reflective)

Type D = Yellow, two-way (reflective)

Type G = Clear, one-way (reflective)

Type H = Yellow, one-way (reflective)

Type J = White, dagmar (reflective)

Type JY = Yellow, dagmar (reflective)

Bridge Abutment (yellow)

Bridge Abutment (white)

Blue, two-way (reflective)

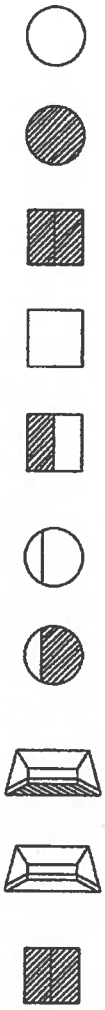

GENERAL NOTES:

Raised pavement markers shall be placed so that the reflective face of the marker is facing and perpendicular to traffic.

YELLOW PLAN SYMBOLS

LEGEND:

4BY		4" Broken yellow line with a 10' line segment and a 30' gap
4SY		4" Solid yellow line
4SBY		4" Double yellow line, one solid, one broken with a 10' line segment and a 30' gap
4DY	2" 2"	4" Solid double yellow line
4DTY		4" Dashed yellow line with a 2' line segment and a 4' gap
8DTY		8" Dashed yellow line with a 2' line segment and a 4' gap
12SY		12" Solid yellow line
24SY		24" Solid yellow line

YELLOW PLAN SYMBOLS WITH RAISED PAVEMENT MARKERS

(continued on next page)

LEGEND:

4" Broken yellow line with a 10' line segment and a 30' gap, with type 'D' RPMs @ 40' spacing

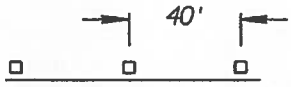

4" Solid yellow line with type 'D' RPMs @ 40' spacing (for curved and tapered sections of roadway)

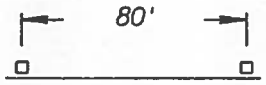

4" Solid yellow line with type 'D' RPMs @ 80' spacing (for straight sections of roadway)

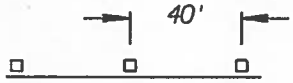

4" Solid yellow line with type 'H' RPMs @ 40' spacing with dirt median.

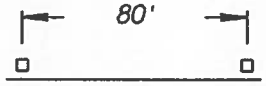

4" Solid yellow line with type 'H' RPMs @ 80' spacing for straight sections of roadway with dirt medians

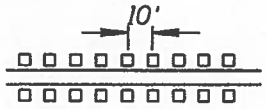

4" Solid double yellow line with type 'D' RPMs @ 10' spacing

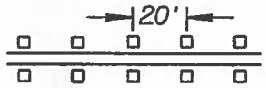

4" Solid double yellow line with type 'D' RPMs @ 20' spacing

YELLOW PLAN SYMBOLS WITH RAISED PAVEMENT MARKERS (continued from previous page)

LEGEND:

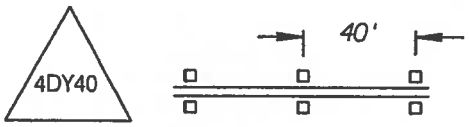

4" Solid double yellow line with type 'D' RPMs @ 40' spacing

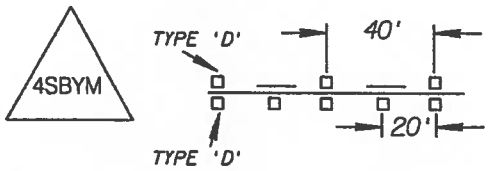

4" Double yellow line, one solid, one broken with a 10' line segment and a 30' gap with type 'D' RPMs @ a 20' spacing (solid), type 'D' RPMs @ 40' spacing (broken)

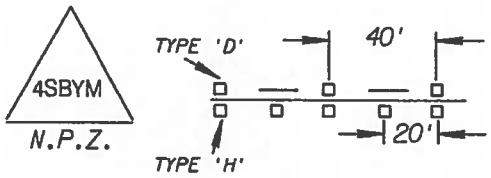

4" Double yellow line, one solid, one broken with a 10' line segment and a 30' gap, with type 'H' RPMs @ a 20' spacing (solid) type 'D' RPMs @ a 40' spacing (broken)

4" Dashed yellow line with a 2' line segment and a 4' gap with Type 'D' RPMs @ 12' spacing.

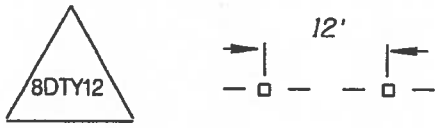

8" Dashed yellow line with a 2' line segment and a 4' gap

WHITE PLAN SYMBOLS

LEGEND:

4BW	4" Broken white line with a 10' line segment and a 30' gap
4SW	4" Solid white line
4DTW	4" Dashed white line with a 2' line segment and a 4' gap
8DTW	8" Dashed white line with a 2' line segment and a 4' gap
8SW	8" Solid white line
12SW	12" Solid white line
24SW	24" Solid white line
8BW	8" Broken white line with a 3' line segment and a 9' gap

WHITE PLAN SYMBOLS WITH RAISED PAVEMENT MARKERS

LEGEND:

4DTW12	12'	4" Dashed white line with a 2' line segment and a 4' gap
8DTW12	12'	8" Dashed white line with a 2' line segment and a 4' gap
4BW40	40'	4" Broken white line with a 10' line segment and a 30' gap with type 'G' RPMs @ 40' spacing
4SW20	20'	4" Solid white line with type 'G' RPMs @ 20' spacing
4SW40	40'	4" Solid white line with type 'G' RPMs @ 40' spacing
4SW80	80'	4" Solid white line with type 'G' RPMs @ 80' spacing
8SW20	20'	8" Solid white line with type 'G' RPMs @ 20' spacing
8SW40	40'	8" Solid white line with type 'G' RPMs @ 40' spacing
8BW24	24'	8" Broken white line with a 3' line segment and a 9' gap with two type 'A' RPMs @ 24' spacing
8SW10	10'	8" Solid white line with type 'G' RPMs @ 10' spacing

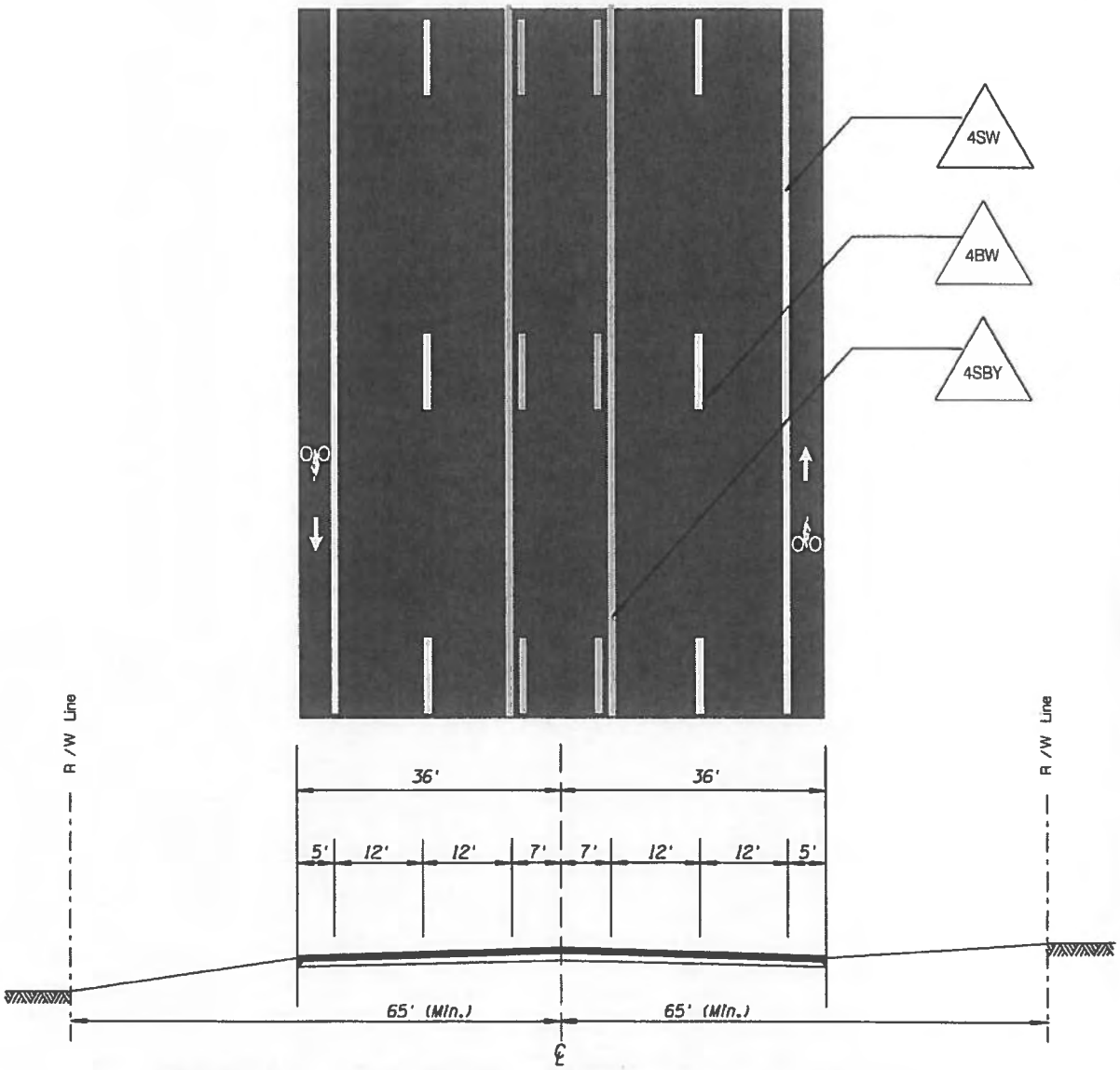

RURAL MINOR ARTERIAL ROAD

(not to scale)

GENERAL NOTES:

1. Cross-sections are per the functional classifications designated in the MCDOT Roadway Design Manual, Chapter 5.1.

2. Where Roadway conditions do not permit use of this standard, alternate treatment shall be approved by the County Traffic Engineer or his designated representative.

3. All striping dimensions shall be to center of stripe.

4. Final layout and/or field adjustments of pavement marking shall be approved by the County Traffic Engineer or his designated representative.

LEGEND:

4SW	———	4" Solid white line
4BW	— — —	4" Broken white line: 10' line segment, 30' gap
4SBY	— — — ═══	4" Double yellow line, one solid, one broken with a 10' line segment and a 30' gap.

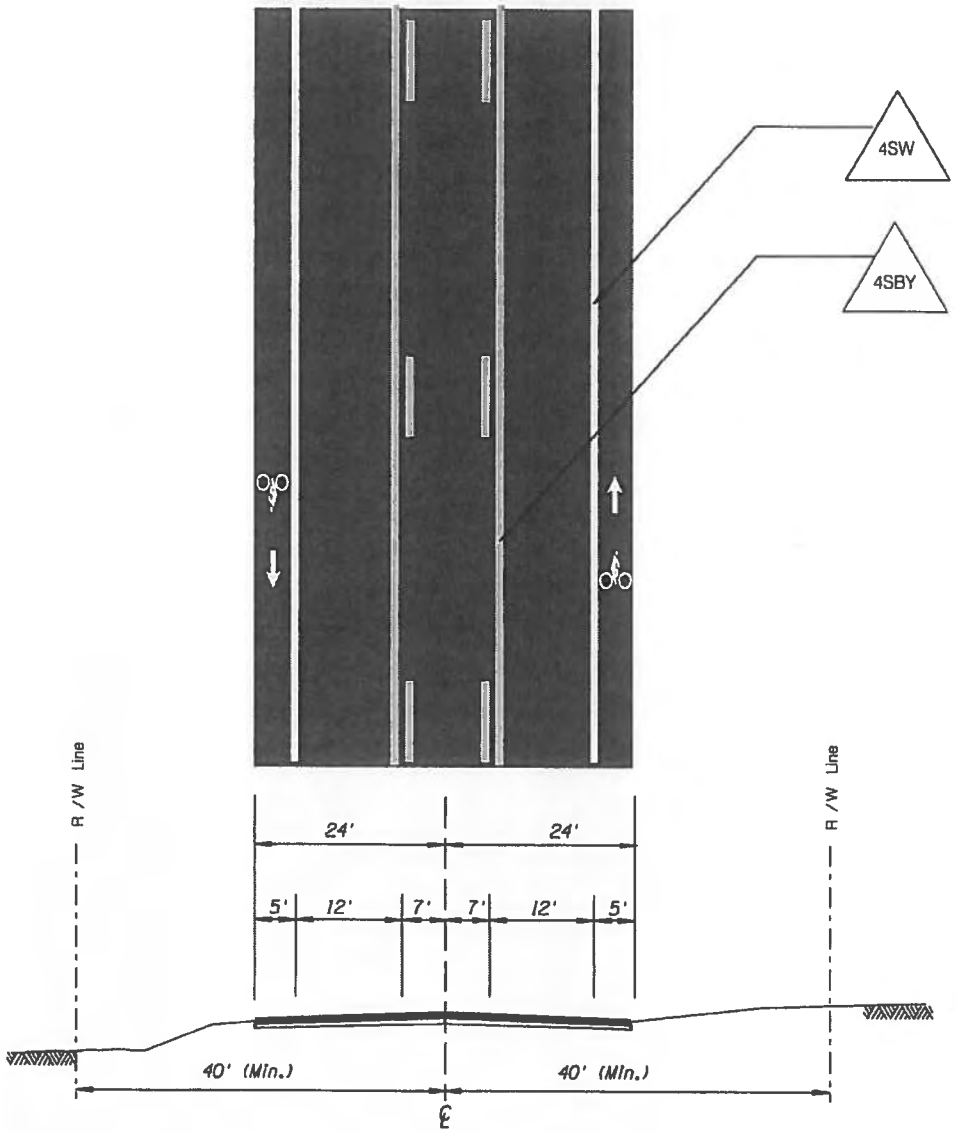

RURAL MAJOR COLLECTOR ROAD

(not to scale)

GENERAL NOTES:

1. Cross-sections are per the functional classifications designated in the MCDOT Roadway Design Manual, Chapter 5.1.
2. Where Roadway conditions do not permit use of this standard, alternate treatment shall be approved by the County Traffic Engineer or his designated representative.
3. All striping dimensions shall be to center of stripe.
4. Final layout and/or field adjustments of pavement marking shall be approved by the County Traffic Engineer or his designated representative.
5. For information on: Clear Zones, Intersections, Geometric Design and Access Control reference the MCDOT Roadway Design Manual.

LEGEND:

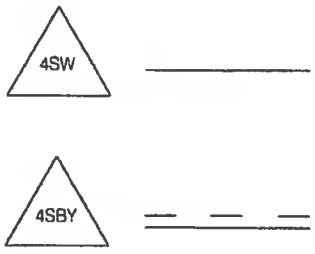

4" Solid white line

4" Double yellow line, one solid, one broken with a 10' line segment and a 30' gap

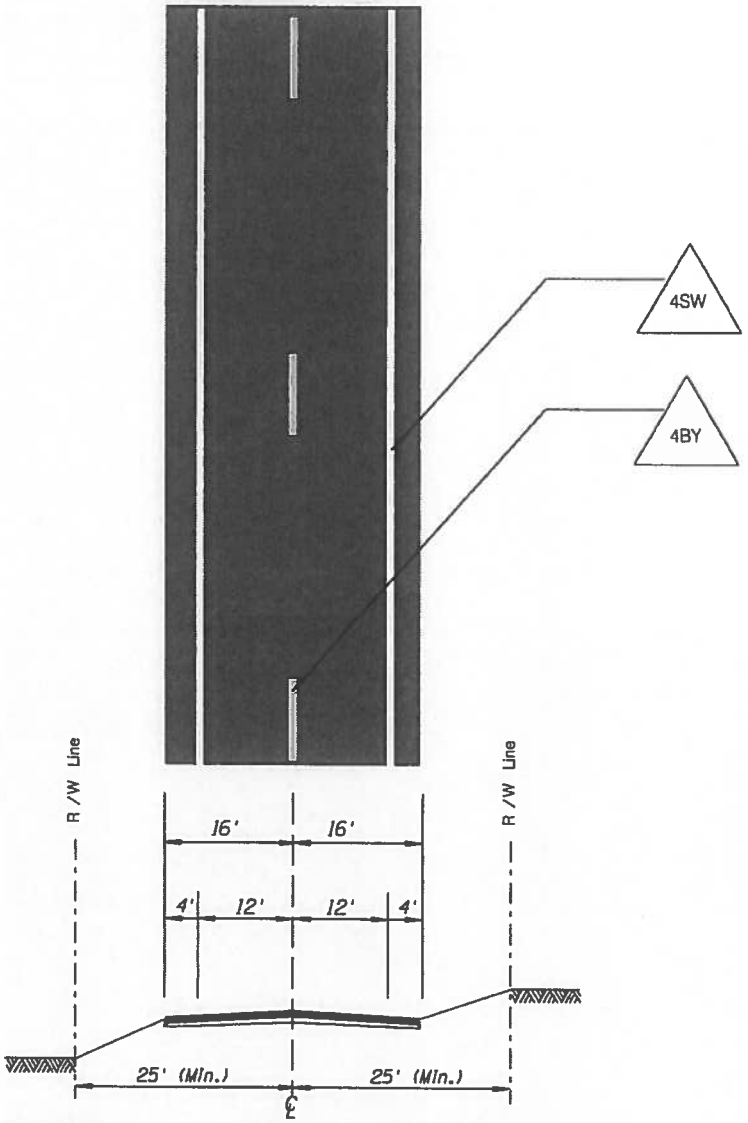

RURAL LOCAL ROADS

(not to scale)

GENERAL NOTES:

1. Cross-sections are per the functional classifications designated in the MCDOT Roadway Design Manual, Chapter 5.1.
2. Where Roadway conditions do not permit use of this standard, alternate treatment shall be approved by the County Traffic Engineer or his designated representative.
3. All striping dimensions shall be to center of stripe.
4. Final layout and/or field adjustments of pavement marking shall be approved by the County Traffic Engineer or his designated representative.
5. For information on: Clear Zones, Intersections, Geometric Design and Access Control reference the MCDOT Roadway Design Manual.
6. Striping of Rural Local Roads shall be approved by the County Traffic Engineer or his designated representative.

LEGEND:

4SW — 4" Solid white line

4BY — 4" Broken yellow line with a 10' line segment and a 30' gap.

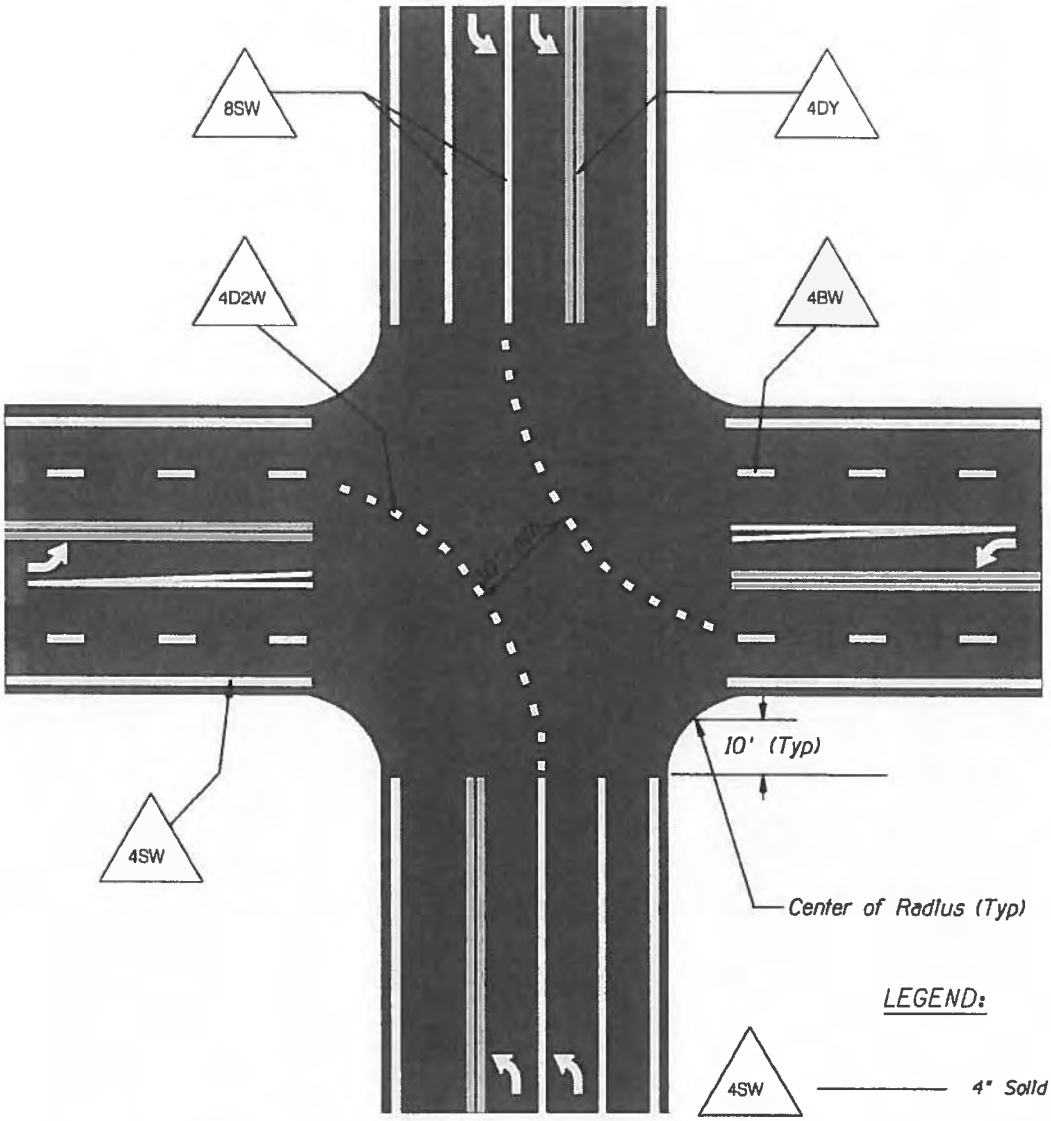

LEGEND:

- 4SW — 4" Solid white line
- 8SW — 8" Solid white line
- 4DY — 4" Solid double yellow
- 4D2W — 4" Dashed white line with a 2' line segmen and a 4' gap
- 4BW — 4" Broken white line with a 10' line segment and a 30' gap

PAVEMENT MARKING EXTENSIONS THROUGH INTERSECTIONS

(not to scale)

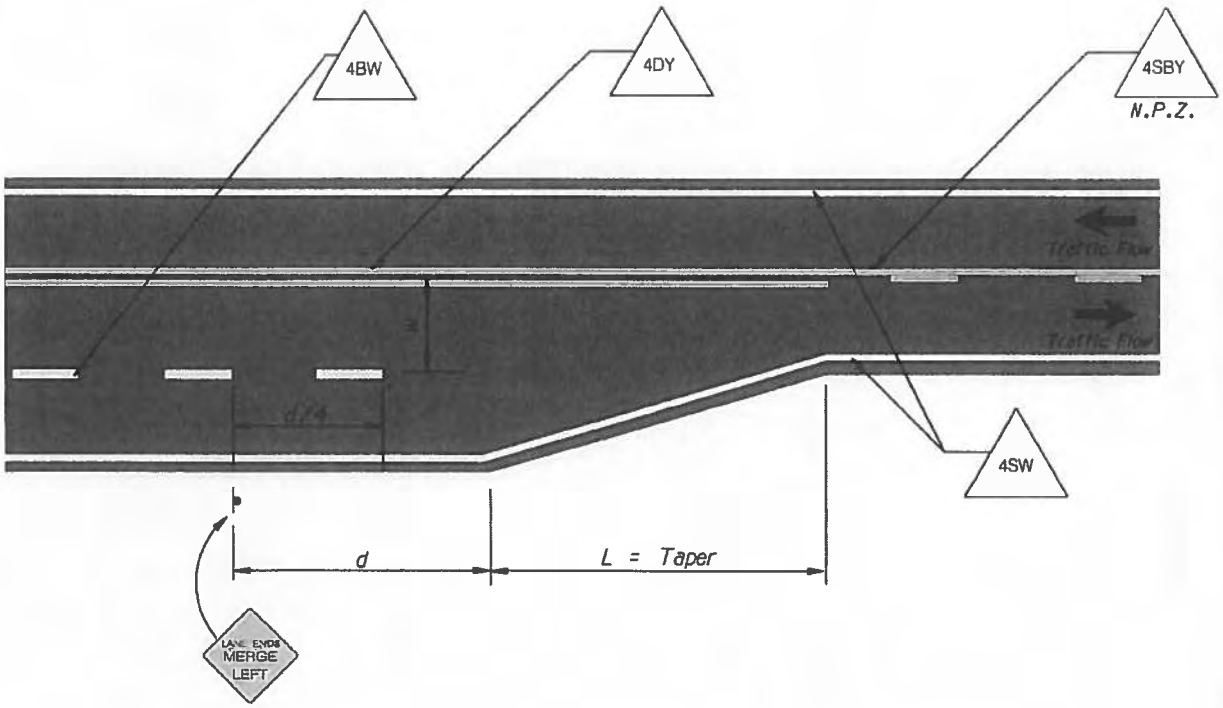

LANE REDUCTION TRANSITION AND SIGNS

(not to scale)

GENERAL NOTES:

L = Length in feet

S = 85th percentile speed
(On new construction the design speed may be used)

W = Offset in feet

d = Advance warning sign distance
(See Section 2C.05/MUTCD)

$L = \frac{WS^2}{60}$ - For speeds less than 45 mph

L = S x W - For speeds 45 mph or greater

LEGEND:

4SW — 4" Solid white line

4BW — 4" Broken white line with a 10' line segment and a 30' gap

4SBY N.P.Z. — 4" Double yellow line, one solid, one broken with a 10' line segment and a 30' gap

4DY — 4" Solid double yellow line

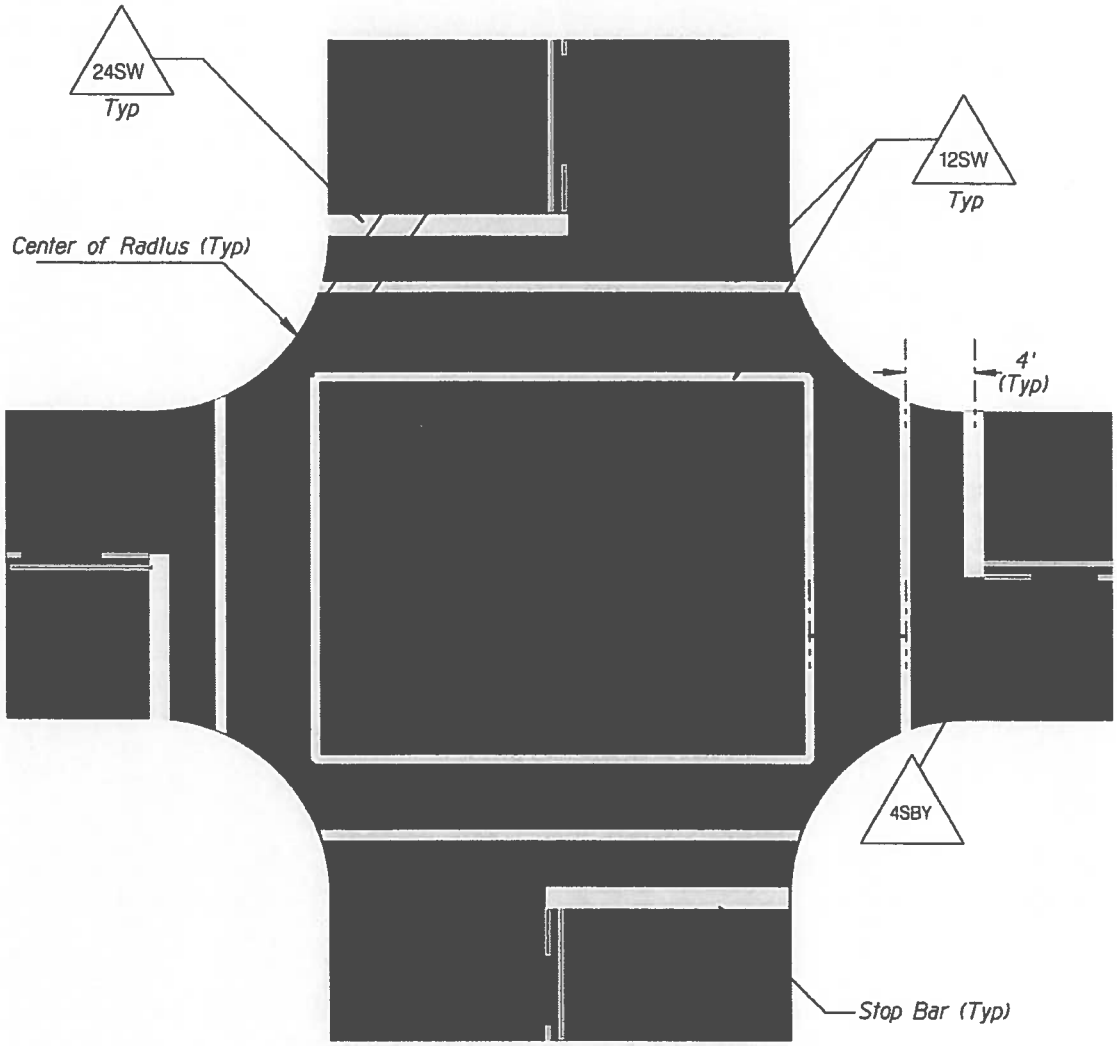

STANDARD CROSSWALK AND STOP LINES

(not to scale)

GENERAL NOTES:

1. Marked crosswalks shall be installed at signalized and 4-way stop intersections as designated by the County Traffic Engineer or his representative.

2. All new crosswalks shall be installed based on an engineering study.

3. All striping will be from center of stripe to center of stripe.

LEGEND:

12SW Typ — 12" Solid white line (typical)

24SW Typ — 24" Solid white line (typical)

4SBY — 4" Double yellow line, one solid, one broken with a 10' line segment and a 30' gap

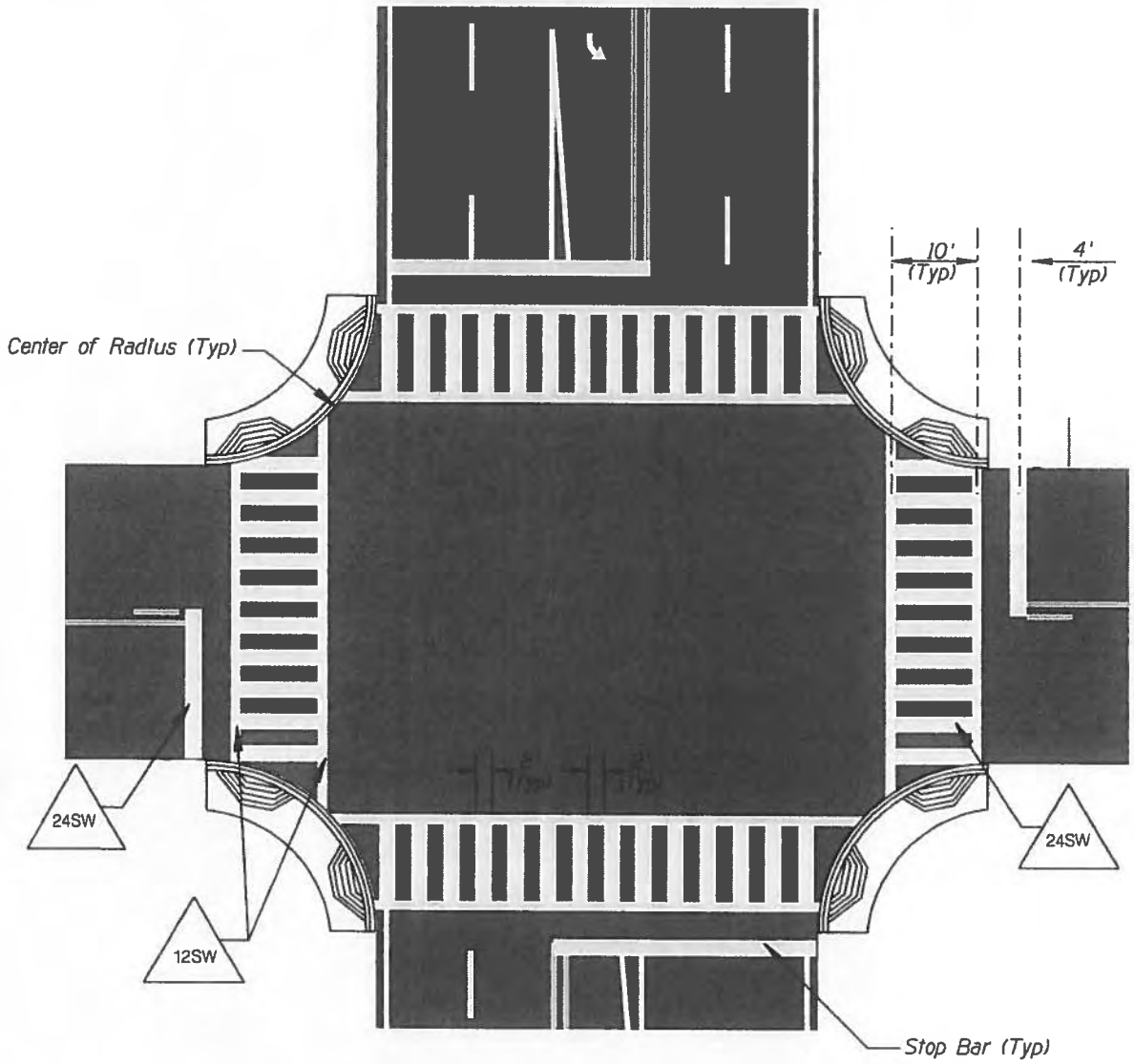

HIGH VISIBILITY DUAL-RAMP CROSSWALK AND STOP LINES

(not to scale)

GENERAL NOTES:

1. All new crosswalks shall be installed based on an engineering study.
2. All high visibility crosswalks shall be approved by the County Traffic Engineer or his designated representative.
3. All striping will be from center of stripe to center of stripe

LEGEND:

12SW — 12" Solid white line

24SW — 24" Solid white line

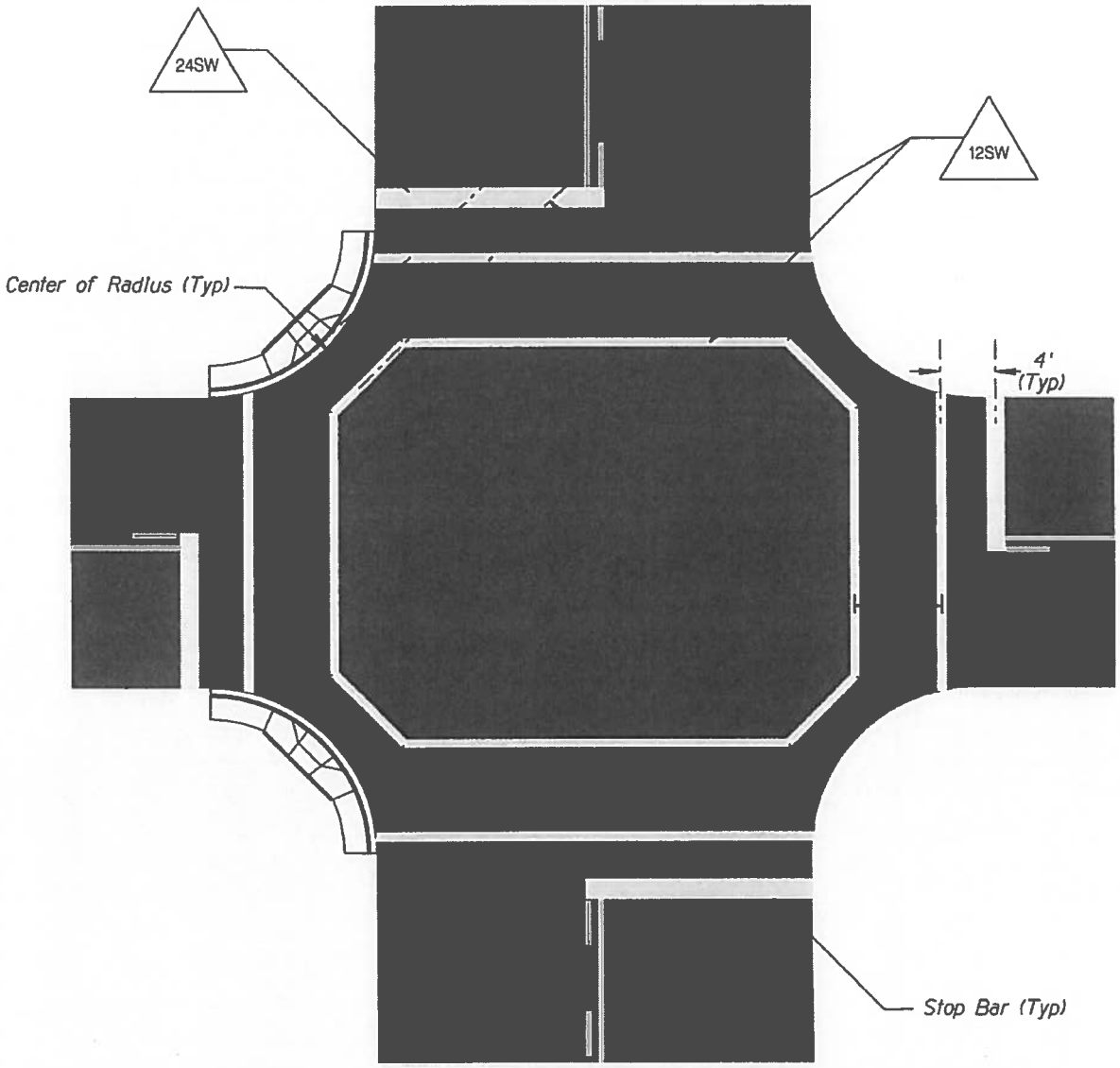

RETROFIT OF EXISTING CROSSWALKS AND STOP LINES

(For A.D.A. Ramps)

(not to scale)

GENERAL NOTES:

1. Marked crosswalks shall be installed at signalized intersections which include pedestrian signal indications.

2. All new crosswalk installation shall be installed based on an engineering study.

LEGEND:

12SW — 12" Solid white line

24SW — 24" Solid white line

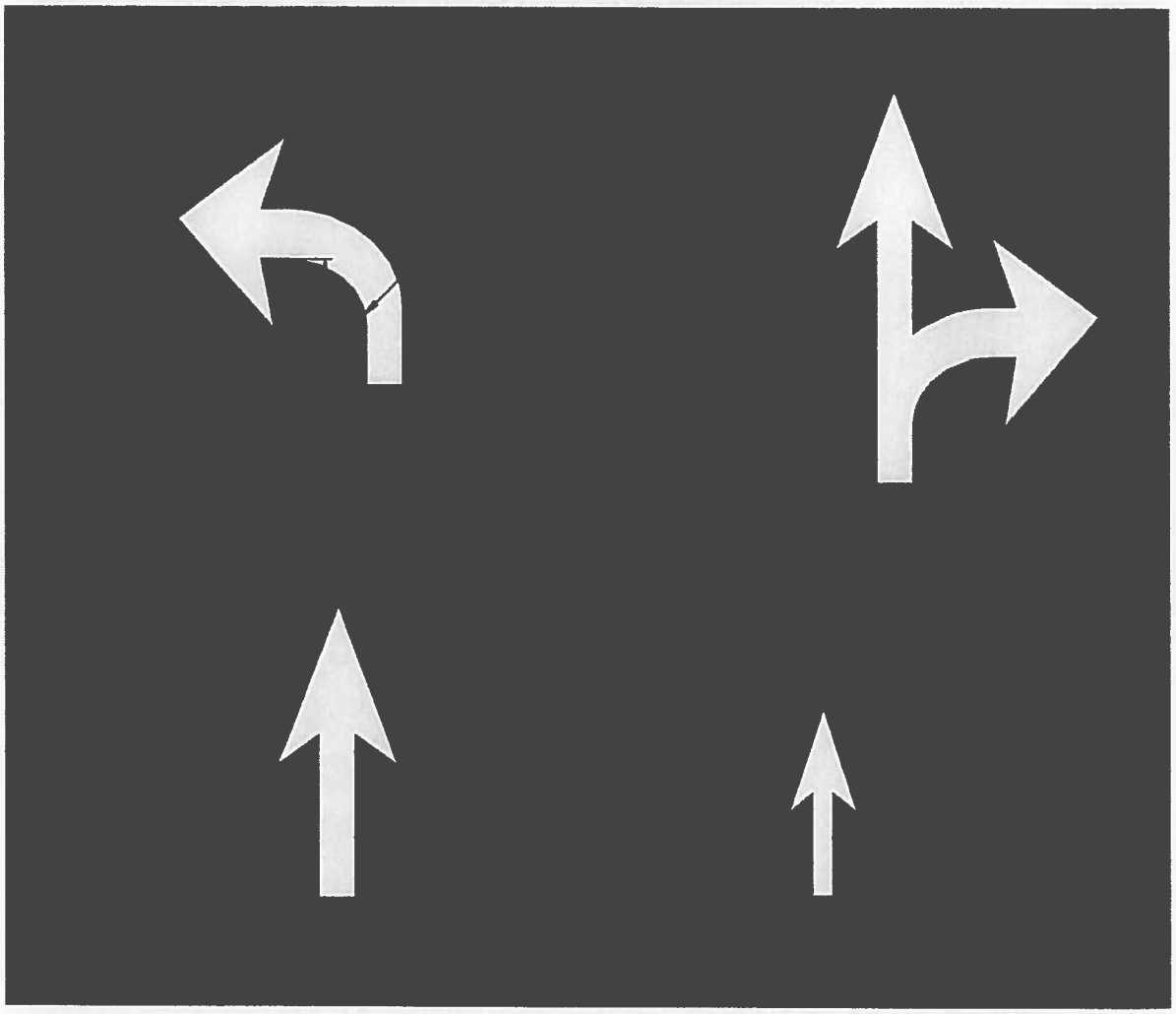

STANDARD ARROWS

(not to scale)

APPENDIX O
TYPICAL TRAFFIC SIGNAL EQUIPMENT PLACEMENT

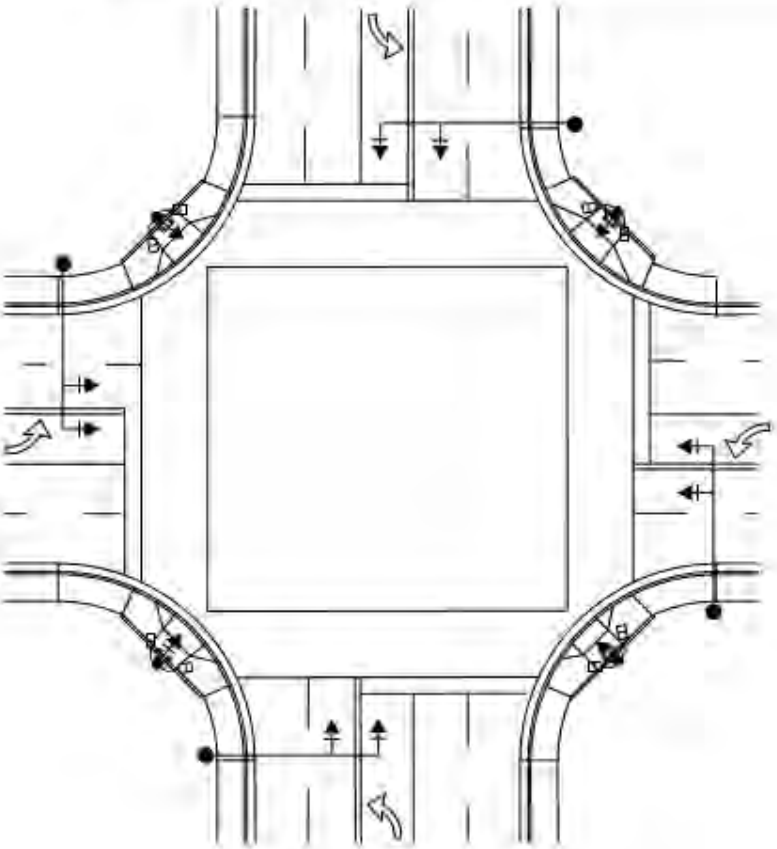

NOTES:

1. 8-Pole configuration is generally used for arterial to collector intersections.
2. When feasible signal poles are to be centered behind the curb at the PC or PT of a curb return. Pedestrian push buttons are to be located on poles centered behind curb ramp landings.

FIGURE 4-3 – 8-POLE TRAFFIC SIGNAL

8. CONTROLLER, ELECTRICAL SERVICE/BATTERY BACK-UP SYSTEM CABINETS

A. EQUIPMENT REQUIREMENTS

1. Point of Service shall be coordinated with the local utility company.
2. The electric service pedestal installed shall be 120/240 volt 100 amp metered Tesco 22/27 or equivalent. The equipment shall meet local utility company design requirements.
3. The controller cabinet shall be per MCDOT Standard Detail 4730. Contact MCDOT Traffic for Cabinet and Controller details.
4. An uninterrupted power supply (UPS) is required (the UPS is referred to as a battery backup system or BBS).

B. PLACEMENT REQUIREMENTS

1. Controller cabinets shall be located to provide adequate visibility of the intersection to technicians working at the controller cabinet.
2. Controller cabinets and electric service pedestals shall not be located in areas susceptible to water immersion, flooding, or sprinkler spray.
3. See Figure 8-1 for typical equipment placement.

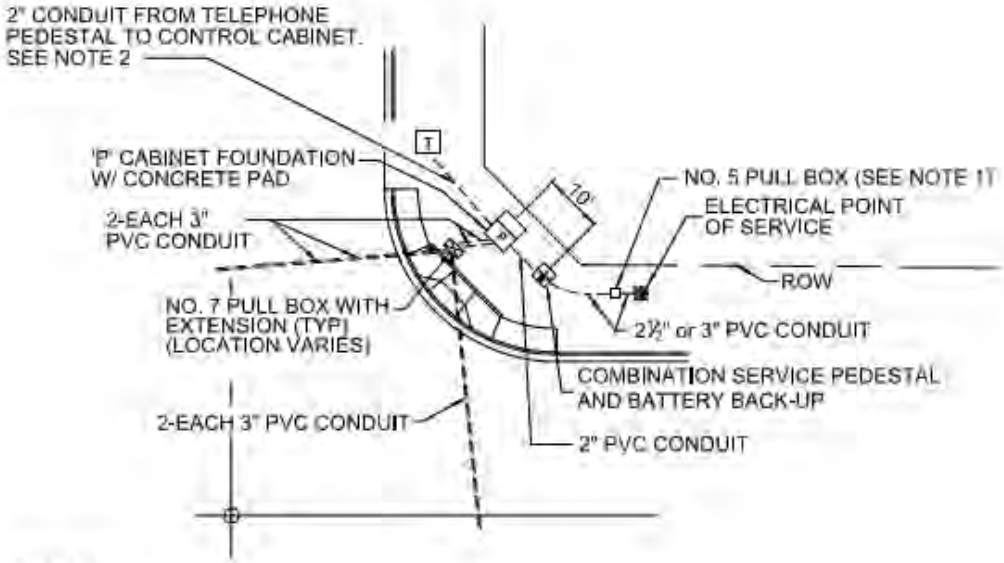

NOTES:
1. If required by the electric company.
2. If required for signal communication.

FIGURE 8-1 – EQUIPMENT PLACEMENT

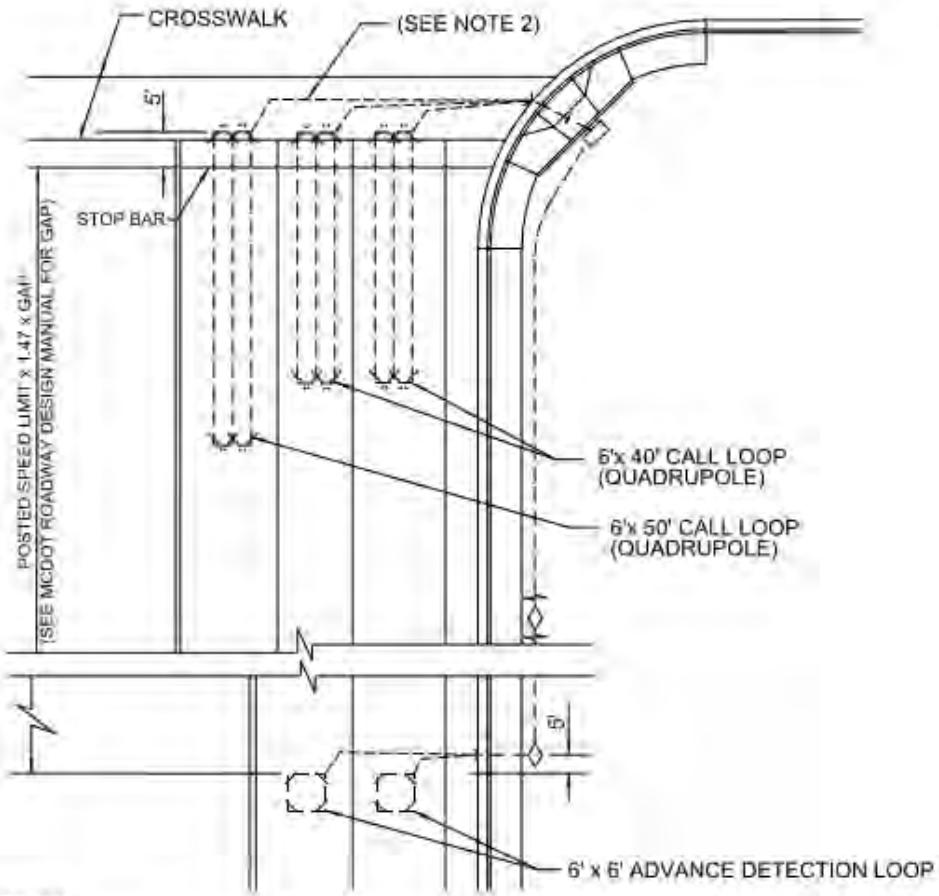

NOTES:

1. All detector loops shall be centered in painted lane.
2. All call loops (quadrupole) and advance loops shall have separate lead-in sawcuts and wiring from loops to conduit stub-outs.

FIGURE 9-1 – LOOP DETECTOR PLACEMENT

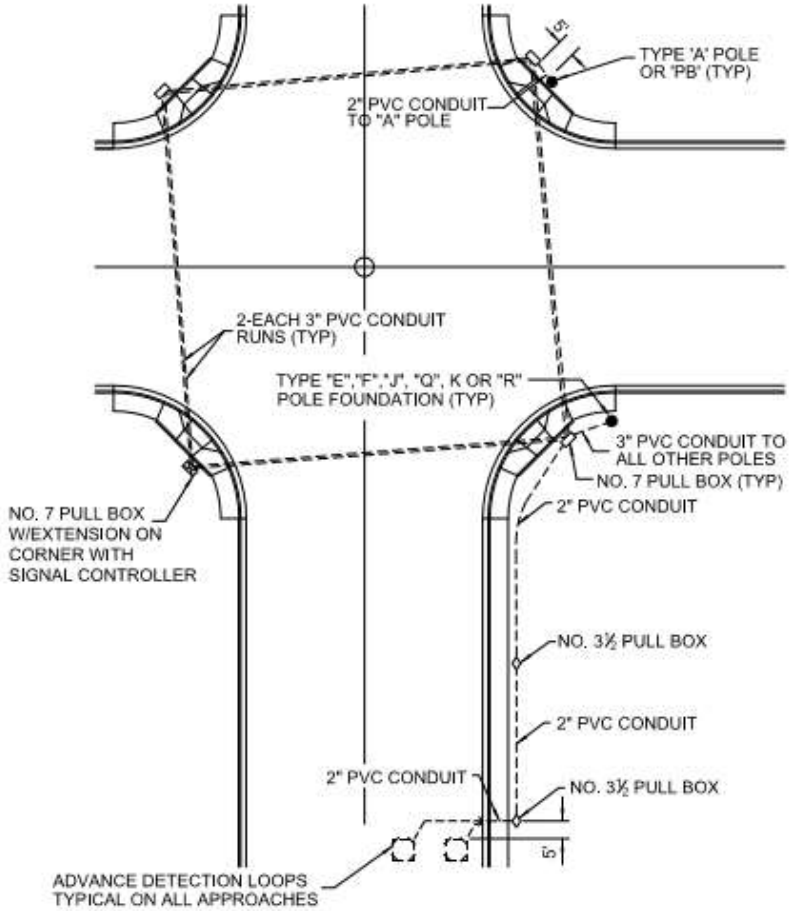

FIGURE 10-1 – TYPICAL PULL BOXES AND CONDUIT

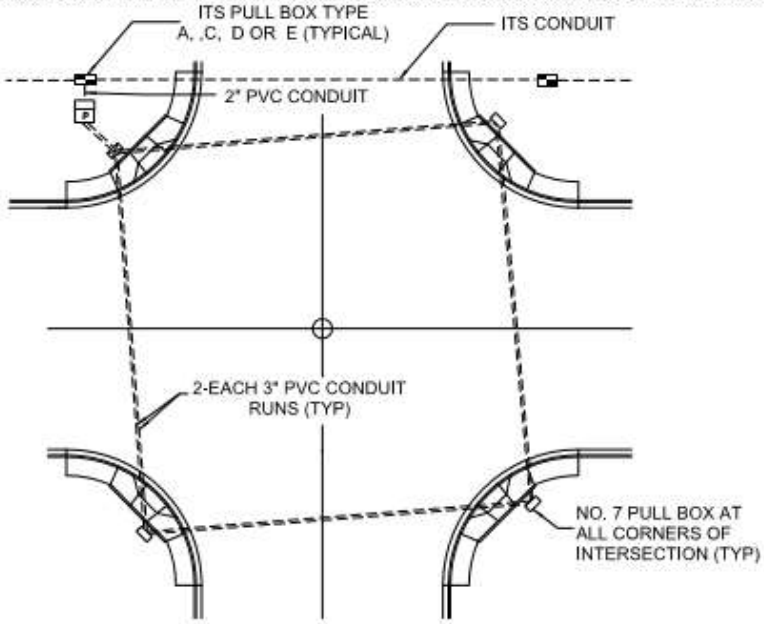

FIGURE 10-2 – TYPICAL ITS PULL BOXES AND CONDUIT

APPENDIX P
LANDSCAPING REQUIREMENTS
SEE ZONING CODE
ARTICLE 404

APPENDIX Q
ROUNDABOUTS

6.2 ROUNDABOUTS

Originator: Transportation Systems Management Division

6.2.1 GENERAL

A modern roundabout is a type of circular intersection characterized by channelized approaches, yield control at entry, counterclockwise circulation around a central island, and geometric features that create a low-speed environment. Roundabouts offer safety, operational, and other advantages over conventional intersections including fewer conflict points, lower speeds, improved traffic flow, lower fuel consumption, and reduced air pollution.

All roundabout designs are to comply with Transportation Research Board (TRB) National Cooperative Highway Research Program (NCHRP) Report 672 *Roundabouts: An Informational Guide, Second Edition* produced in cooperation with the U.S. Department of Transportation, Federal Highway Administration (FHWA).

Figure 6.4 identifies various design features of the modern roundabout.

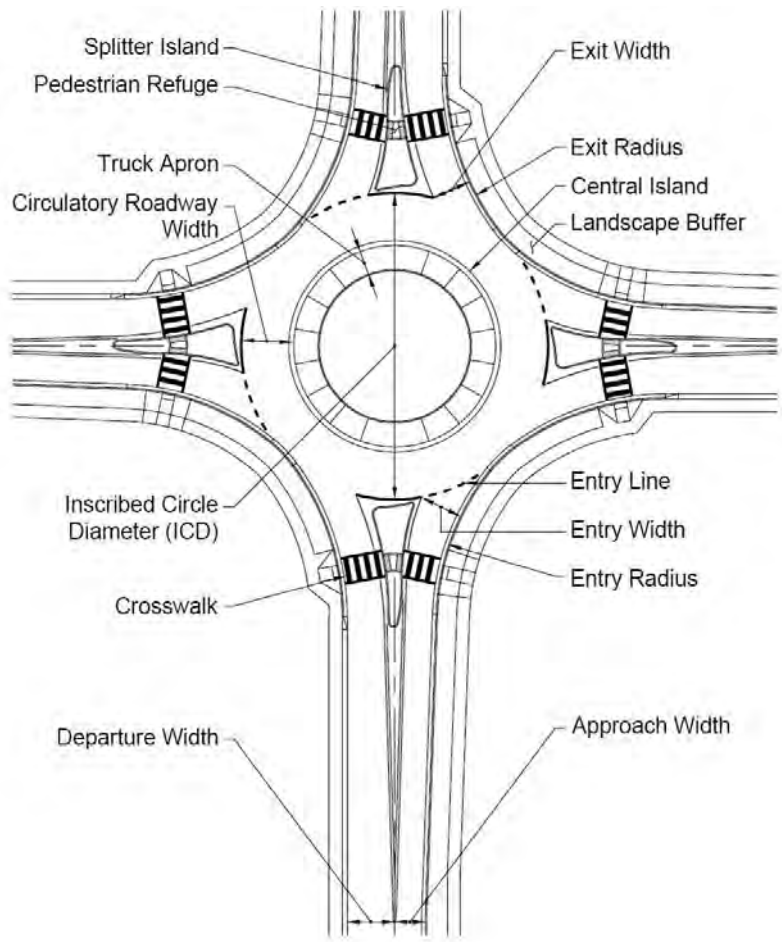

FIGURE 6.4: GEOMETRIC ELEMENTS OF A ROUNDABOUT

6.2.2 APPLICABILITY

Roundabouts may provide beneficial advantages over a conventional intersection for any of the following conditions:

1. Where stop controls (stop signs or signals) are causing unnecessary delay;
2. Where there is a high left turn percentage on one or more legs;
3. Where there have been a disproportionally high number of head on or right angle collisions;
4. Where it is not desirable to give priority to either street; and
5. Where there is unusual intersection geometry.

Certain physical or geometric complications may make it uneconomical or ineffective to construct a roundabout at the location being evaluated. These could include right of way limitations, utility conflicts, drainage problems, and proximity of significant traffic generators or traffic control devices requiring pre-emption, as needed at railroad crossings. Specific conditions in which the use of roundabouts will be unacceptable include the following:

1. Where roadway grade exceeds 4%;
2. Where there is inadequate sight distance;
3. Where major roadway ADT exceeds 90% of total intersection ADT;
4. Where high volumes of pedestrians with special needs would have difficulty crossing the road.
5. Where a downstream traffic control device such as a traffic signal would result in a queue that extends into the functional area of the roundabout
6. At a single intersection within coordinated signal network.

6.2.3 DESIGN PROCESS

The design process for roundabouts is usually an iterative process of evaluating the geometric layout for operational performance, and safety. Minor adjustments in geometry can result in significant changes in the safety and/or operational performance. Thus, the designer often needs to revise and refine the initial layout attempt to enhance its capacity and safety. NCHRP Report 672 Exhibit 6-1 provides a general outline for the design process with cross-references to other sections of the Report for each individual step within the process.

6.2.4 GENERAL DESIGN CRITERIA

Table 6.3 identifies criteria to be used for roundabout design based on the classification of the approach roadways.

TABLE 6.3: ROUNDABOUTS – GENERAL DESIGN REQUIREMENTS			
Feature/Parameter	**Mini-Roundabout**	**Single-Lane Roundabout**	**Multilane Roundabout(1)**
Approach Roadway Classifications	Minor Collector Local Residential	Major Collector Minor Collector Local Residential	Principal Arterial Minor Arterial Major Collector Minor Collector
Maximum Entry Speed and Maximum Circulating Speed	20 mph	25 mph	30 mph
Typical Inscribed Circle Diameter (ICD)	90 feet	110-150 feet	140-200 feet
Design Vehicle (Exterior Circulating Lane(s))	S-BUS-40	BUS-40(4)	WB-50(2)
Design Vehicle (Interior Circulating Lane + Truck Apron)	Not Applicable	WB-50	WB-62(3)
Design Vehicle (Circulating Lane + Central Island)	WB-50	Not Applicable	

(1) Values provided are for two-lane configurations.
(2) Exterior circulating lanes are to be designed to accommodate in-lane all through movements of WB-50 vehicles. Exterior circulating lanes connecting arterial-to-arterial roadways are to be designed to accommodate in-lane through movements of WB-67 vehicles.
(3) WB-62 and WB-67 vehicles may use the interior circulating lane with the adjacent truck apron for through and turning movements. WB-50 vehicles may use the interior circulating lane with the adjacent truck apron for turning movements, through movements are to be accommodated in-lane. The BUS-40 vehicle shall not use the truck apron.
(4) The S-BUS-40 design vehicle may be used as the design vehicle for Single-Lane roundabouts connecting only Local Residential and Minor Collector roads.

Figures 6.5 and 6.6 are geometric layout examples for a single lane roundabout and a multilane roundabout. The right-of-way shown is the minimum required for construction of the roadway and pedestrian facilities. Additional right-of-way area or an easement is needed to protect sight lines.

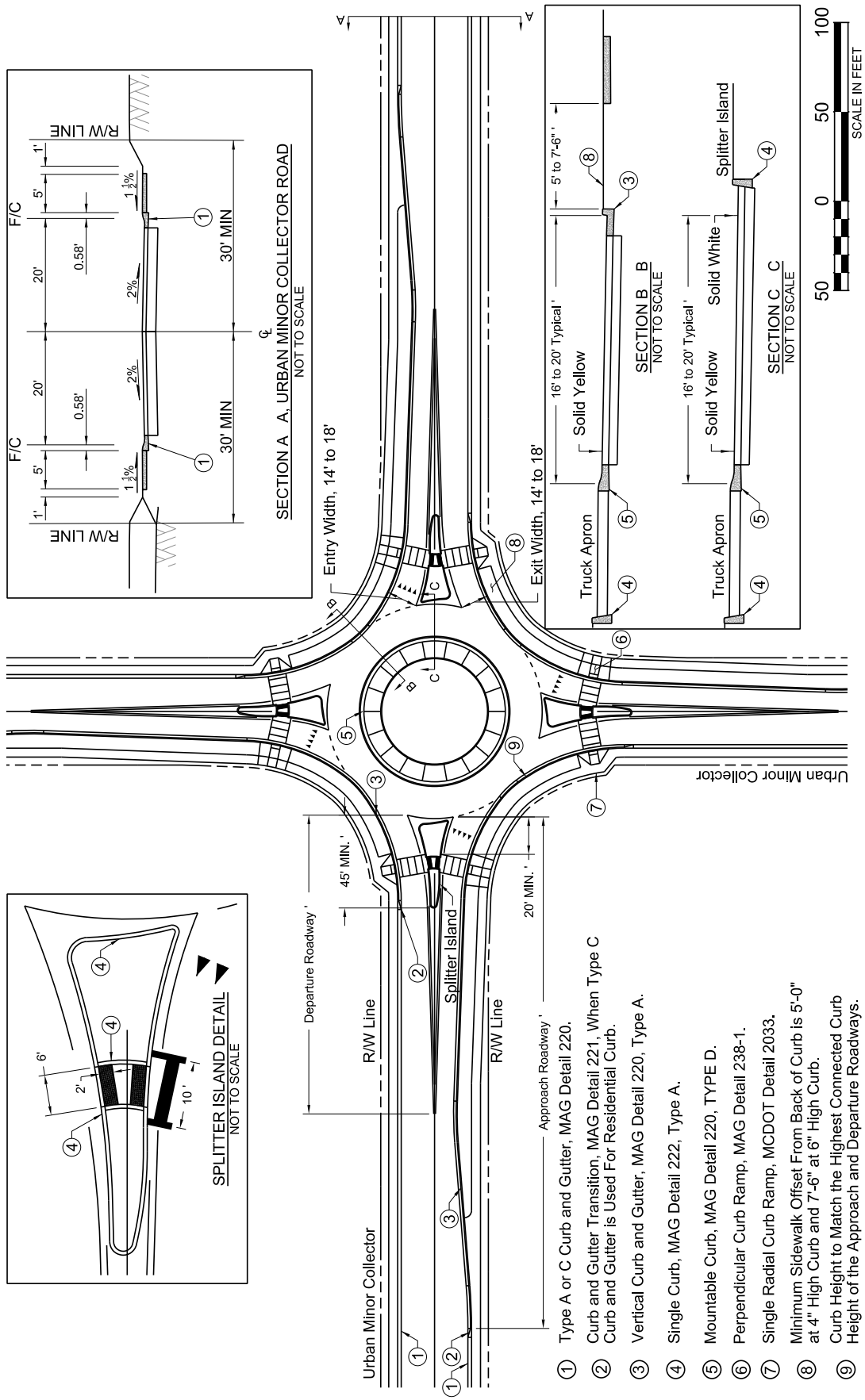

FIGURE 6.5: URBAN SINGLE-LANE ROUNDABOUT

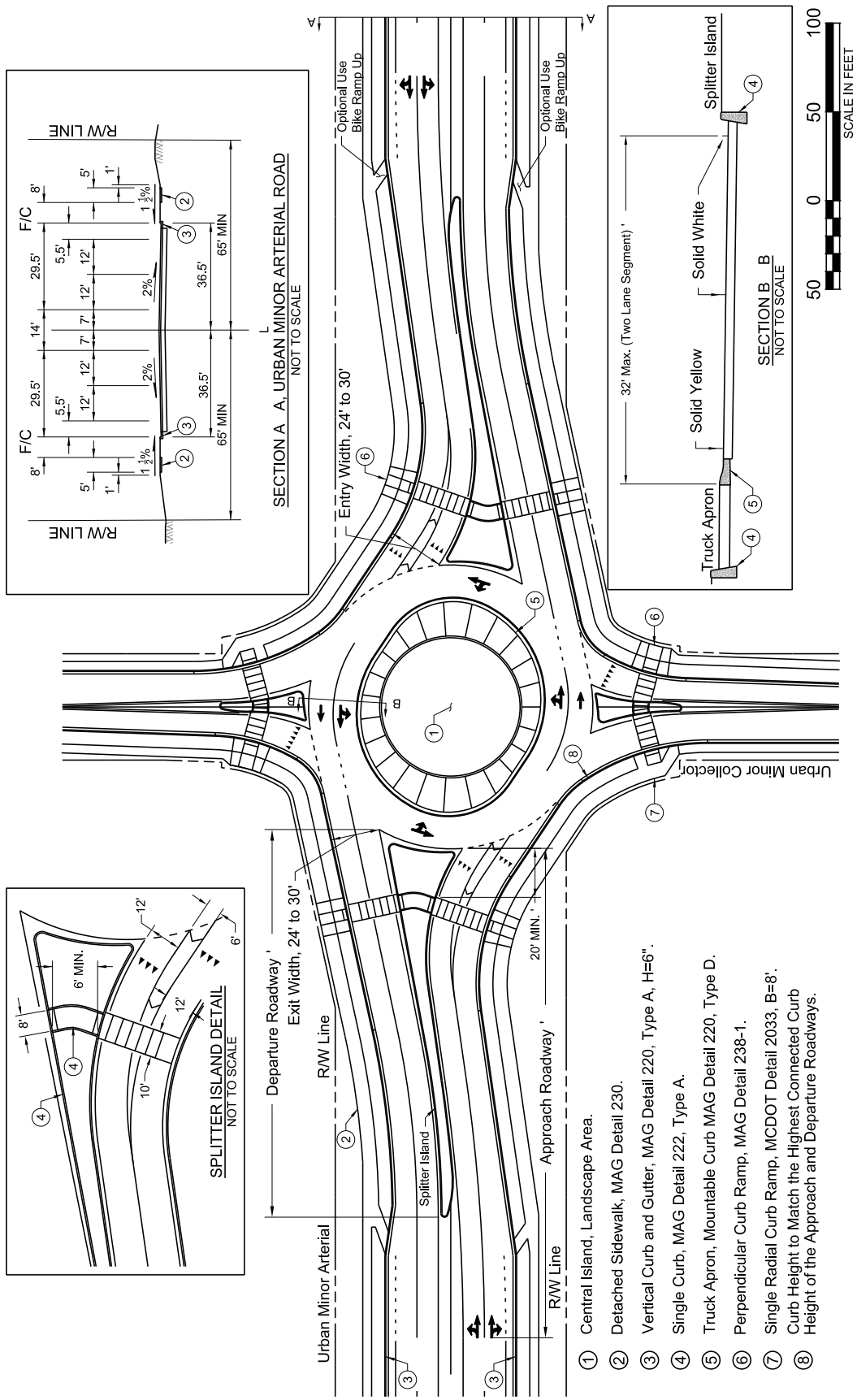

FIGURE 6.6: URBAN MULTILANE ROUNDABOUT

6.2.5 SUBMITTAL REQUIREMENTS SUMMARY

In addition to plan review requirements specified elsewhere in this Manual, all roundabout design submittals shall include the following supporting documentation:

1. Capacity analysis documentation as further specified in Section 6.2.6
2. Design vehicle tracking documentation as further specified in Section 6.2.10
3. Fastest Path documentation as further specified in Section 6.2.10
4. Sight distance documentation as further specified in Section 6.2.10

6.2.6 VALIDATING LANE NUMBERS AND ARRANGEMENTS

The number of entering, circulating, and exiting lanes at roundabouts has a pronounced effect on roundabout operation. In general, it is desirable to provide only enough lanes necessary to provide acceptable capacity. Fewer lanes provide less complex operation, which generally translates into improved safety. The number and assignment of approach lanes is to be determined for each approach in accordance with the guidelines and procedures outlined in the Roundabouts chapter of the most current edition of the Highway Capacity Manual (HCM).

All roundabout designs must be supported by a documented roundabout capacity analysis demonstrating adequacy of the proposed number and arrangement of lanes to accommodate design year design hour traffic volumes consistent with the requirements stated in Section 2.2 of this Manual. Adequacy is to be confirmed for both AM and PM peak hours for both the opening year and design year. The scope of the required analysis is at the discretion of the County traffic engineer and will depend on the type of roundabout being proposed (mini-, single-lane or multilane), the context within which the roundabout is being proposed (new construction or retrofit), and the proximity of the proposed roundabout to existing and planned future adjacent intersections, driveways and other features with which the roundabout's design must be coordinated.

At a minimum, analysis documentation shall include input parameter values represented graphically as generally depicted Figure 6.7, along with a reporting of volume-to-capacity ratio, control delay, level of service and 95th percentile queue for each approach, under opening year conditions and design year conditions, respectively. If the roundabout will open with lane geometry that is different from what is needed to accommodate design year conditions, the expected life of the interim lane geometry is to be indicated, as is the way transition between interim and ultimate geometry will be accomplished. For those roundabouts proposed for locations that will be located less than a half mile from a signalized intersection, an at-grade railroad crossing and/or another roundabout, additional analysis which considers the effects of upstream and downstream traffic control may be required at the discretion of the County traffic engineer. Similarly, for those roundabouts proposed to replace existing traffic control (retrofit applications) additional analysis justifying the conversion of traffic control/configuration from conventional intersection to a roundabout may be required at the discretion of the County traffic engineer.

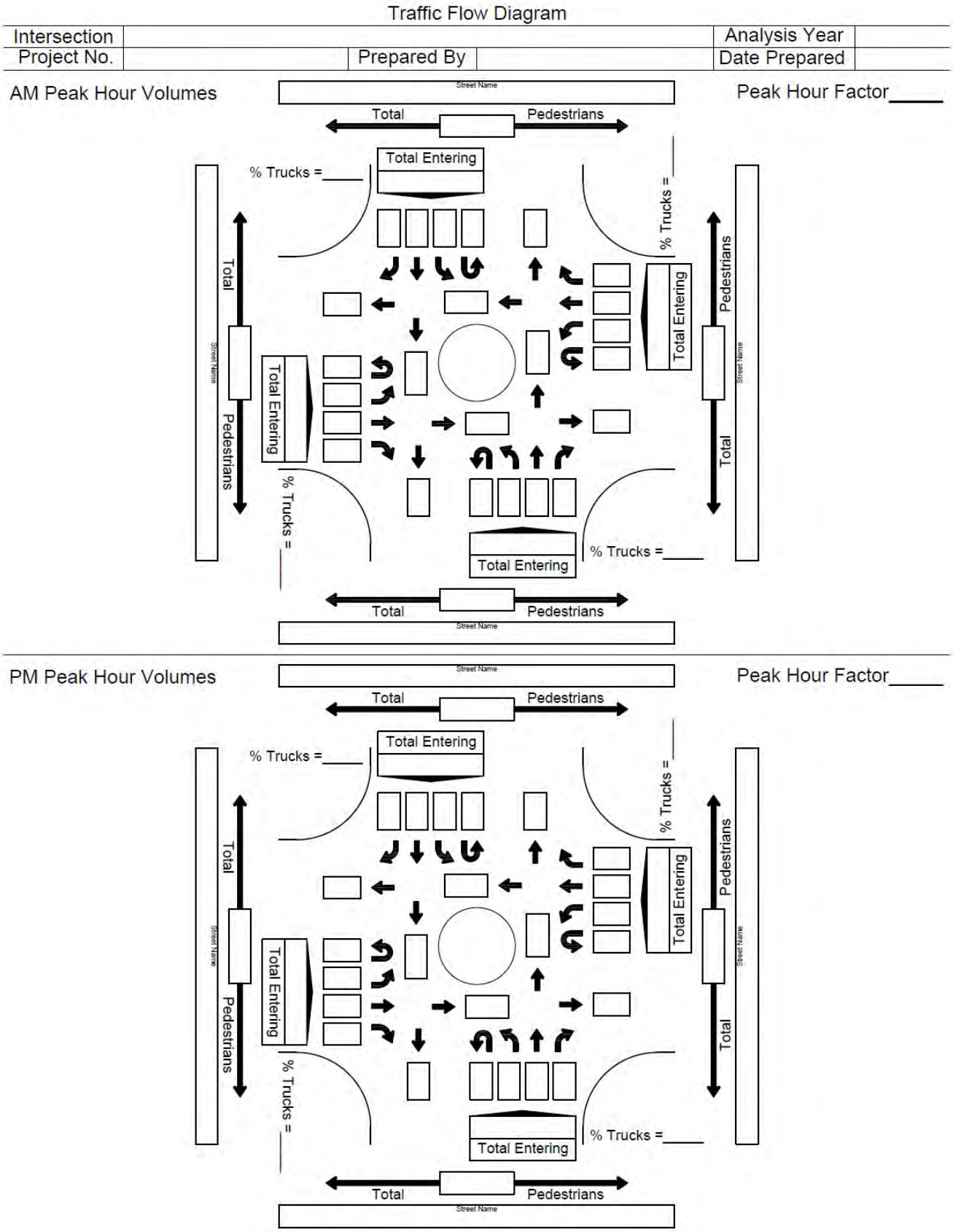

FIGURE 6.7: TRAFFIC VOLUME AND LANE CONFIGURATION DIAGRAMS

6.2.7 BASIC DESIGN PRINCIPLES

Fundamentally, the principles of roundabout design are the same as for other types of intersections. The designer must consider the context of the project and provide suitable geometry and traffic control devices, per established engineering principles. The following principles govern all roundabout designs:

1. Cause slow entry speeds and consistent speeds through the roundabout by using deflection.
2. Provide the appropriate number, type, and arrangement of lanes to achieve adequate capacity, lane volume balance, and lane continuity.
3. Provide smooth channelization that is intuitive to drivers and results in vehicles naturally using the intended lanes.
4. Provide adequate accommodation for design vehicles. The swept path for design vehicles is not to encroach onto an adjacent travel lane.
5. Provide appropriate sight distance and visibility for driver recognition of the intersection and conflicting users.
6. Design to meet the needs of pedestrians and cyclists.

6.2.8 GEOMETRIC DESIGN ELEMENTS

6.2.8.1 INSCRIBED CIRCLE DIAMETER (ICD)

Have the inscribed circle diameter be the minimum required to accommodate the design vehicle, the desired number of lanes, the maximum desired entry speed, and the maximum desired circulating speed. For a WB-50 design vehicle the minimum inscribed circle diameter for a single-lane roundabout should be 110 feet. Additional guidance on ICD dimensioning is provided in Table 6.3.

6.2.8.2 APPROACH ALIGNMENT

The most critical roundabout design objective is to cause low and consistent speeds into and through the roundabout. This condition is created primarily by curb geometry which causes deflection, and should begin on the approach to the yield line. Refer to NCHRP Report 672 Section 6.3.2 for a detailed discussion on the role approach alignment plays in the design of a roundabout and the advantages and disadvantages of various approach alignment alternatives.

6.2.8.3 SPLITTER ISLANDS

Splitter islands are to be designed to control vehicle speeds through path deflection, prevent exiting traffic from accidently crossing into the path of approaching traffic, reinforce one-way circulation, and provide (with the possible exception of mini-roundabouts) a pedestrian refuge area. The pedestrian cross through refuge area shall be six feet (6') wide. When the width of a curb ramp accessing the splitter island exceeds six feet, the width of the refuge area shall be increased to match the width of the curb ramp. Figure 6.8 provides additional guidance in the sizing and positioning/orientation of critical splitter island design elements.

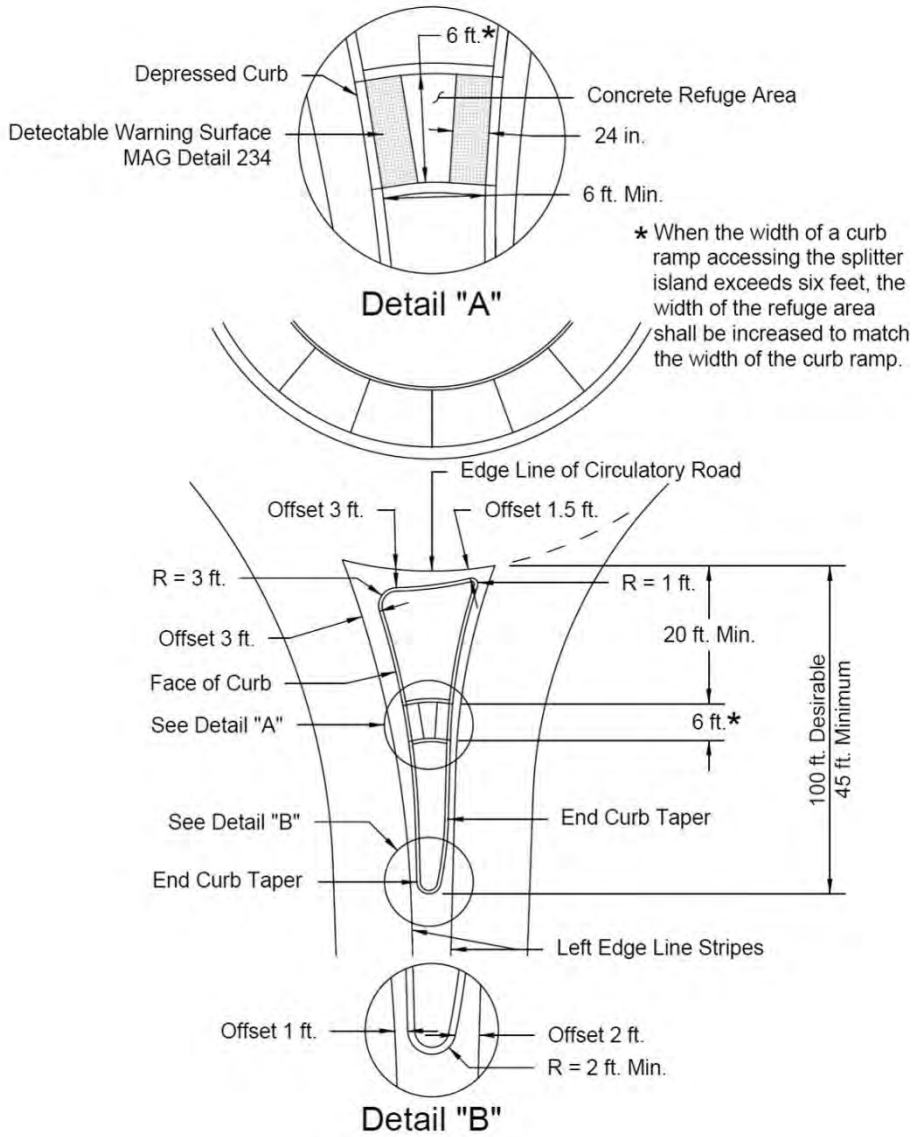

FIGURE 6.8: SPLITTER ISLAND CURB OFFSETS AND NOSE RADII DIMENSIONS

6.2.8.4 ENTRY WIDTH

The entry width is measured from the point where the yield line intersects the left edge of the traveled way to the right edge of the traveled way, along a line perpendicular to the right curb line. Entry width should be kept to a minimum to maximize the safety of the roundabout and wide enough to accommodate the largest design vehicle. Typical entry widths range from 14-18 feet for single-lane entrances and 28-32 feet for two-lane entrances.

6.2.8.5 CIRCULATORY ROADWAY WIDTH

The width of the circulatory roadway should be at least as wide as the maximum entry width, no more than 1.2 times the entry width, and remain constant throughout the roundabout. Appropriate vehicle templates shall be used to determine the roadway circulatory width. A minimum of 2 feet is to be provided between the circulating lane design vehicles' wheel paths and circulatory road curb lines. A minimum of 3 feet is to be provided between the inner truck apron curb and the

wheel path of the design vehicle for truck apron use. Figure 6.9 illustrates how these clearance dimensions are to be measured.

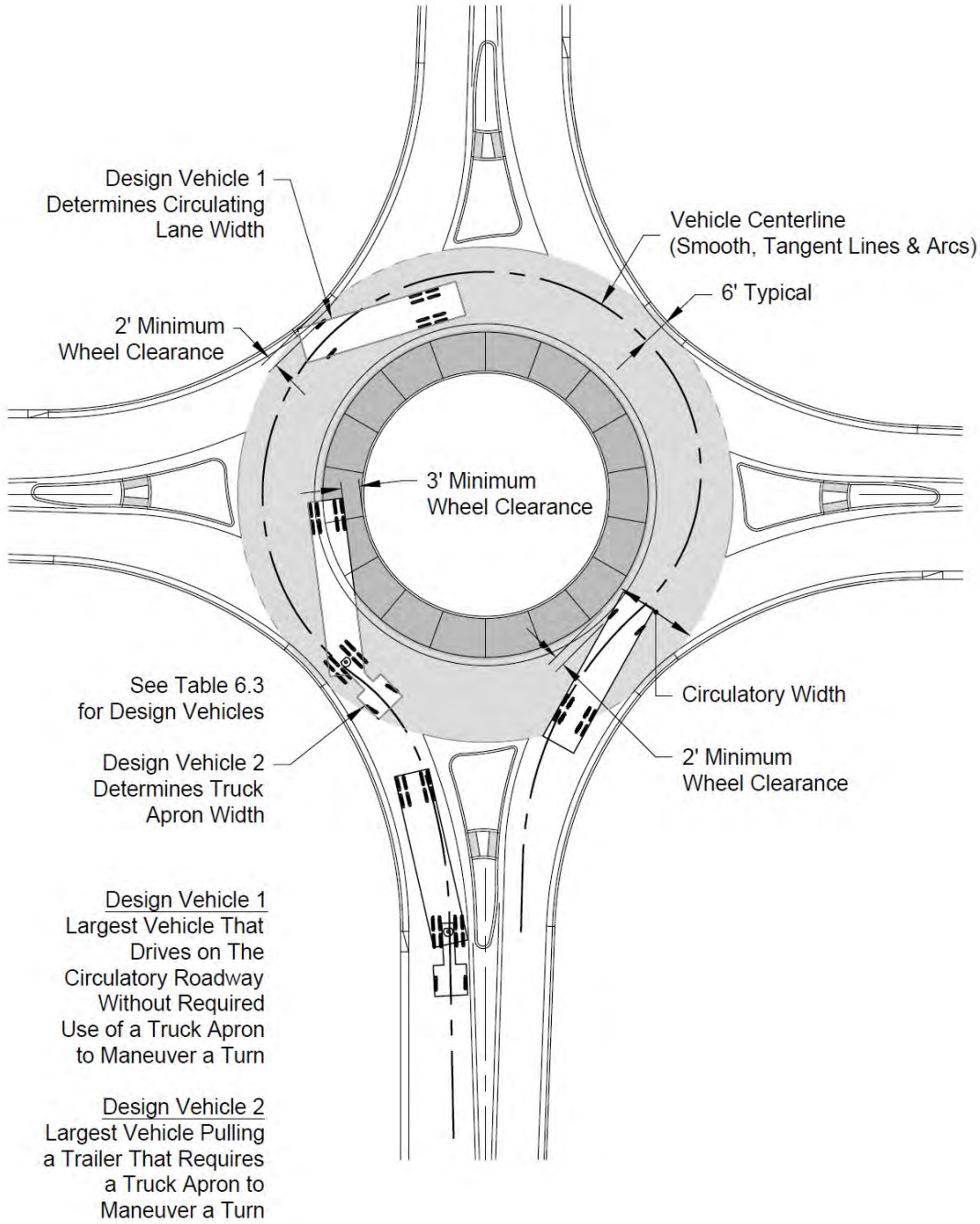

FIGURE 6.9: DESIGN VEHICLE CURB CLEARANCES

6.2.8.6 CENTRAL ISLAND

The central island of a roundabout is the raised, mainly non-traversable area surrounded by the circulatory roadway. It may also include a traversable truck apron. The central island shall not contain anything that attracts pedestrians onto the island or that can be a distraction to drivers. Central islands shall be visible to approaching traffic and provide a cue for traffic to slow down and carefully navigate the intersection.

6.2.8.7 ENTRY RADIUS

The entry radius is to be designed curvilinearly tangential to the outside edge of the circulatory roadway. The projection of the left edge of each entry roadway lane is to be curvilinearly tangential to the left lane line of the receiving lane of the circulatory roadway, which may be the central island. A short tangential section or gore area approaching the yield line may be needed to prevent overlapping paths. With multilane roundabouts, the designer is to consider the natural paths of vehicles to ensure the proposed geometry directs vehicles to stay within the proper lanes through the circulatory roadway and exits. Path overlap occurs when the natural paths of vehicles in adjacent lanes overlap or cross one another. The entry design should align vehicles into the appropriate lane within the circulatory roadway, using the technique shown in Figure 6.10 or others that promote good path alignment. See NCHRP Report 672 Section 6.4.5 for additional guidance on entry design for single-lane roundabouts and Section 6.5.4 for guidance on entry design for multi-lane roundabouts, including avoiding Entry Path Overlap.

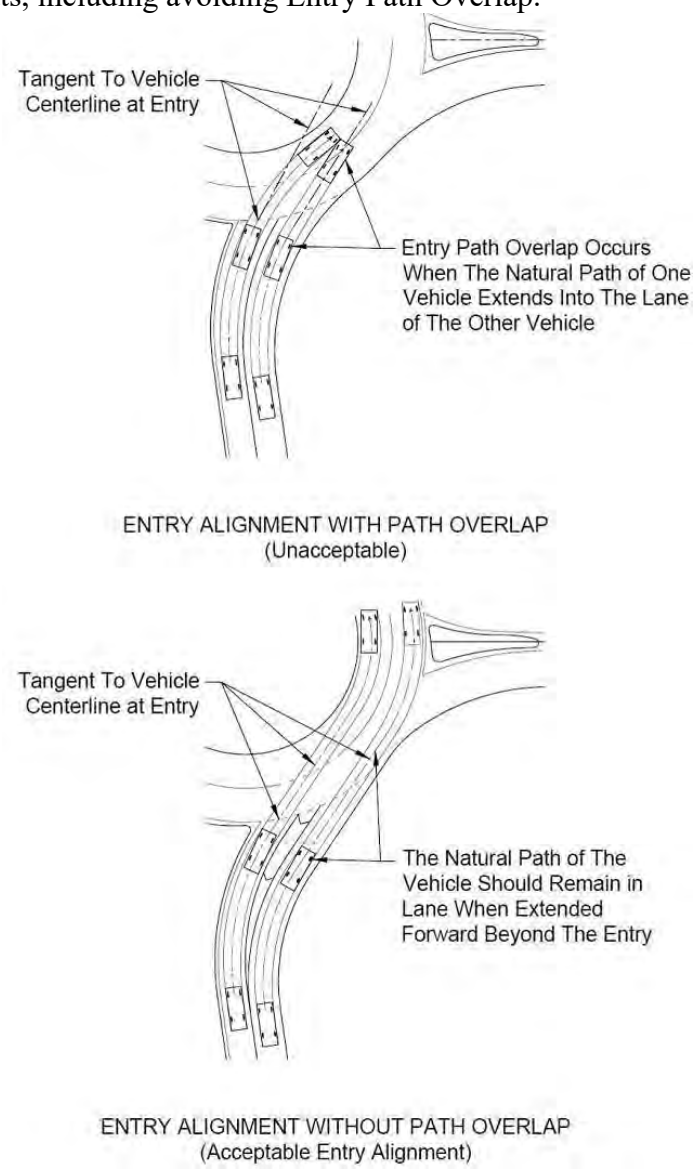

FIGURE 6.10: ENTRY PATH ALIGNMENT – AVOID PATH OVERLAP

6.2.8.8 EXIT RADIUS

The exit curb radius is to be curvilinearly tangential to the outside edge of the circulatory roadway. Guidance on exit design is provided in NCHRP Report 672 Sections 6.4.6 and 6.5.6.

6.2.8.9 TRUCK APRON

Truck aprons are traversable areas provided to accommodate semi-trailer off-tracking while keeping the circulatory roadway width narrow enough to maintain speed control for smaller vehicles.
Truck aprons shall be a different color and texture than the roadway surface. Truck aprons shall be raised above the adjoining roadway using roll curb.

Where truck aprons are used, the slope of the apron shall not exceed two percent.

6.2.9 MINI-ROUNDABOUTS

A mini-roundabout is a type of roundabout characterized by a relatively small inscribed circle diameter, fully traversable central island, and splitter islands.

Figures 6-11 and 6-12 illustrate a typical mini-roundabout layout connecting two intersecting local residential streets. Figure 6-11 identifies features and typical standard construction details to be used for mini-roundabout designs and Figure 6-12 demonstrates the magnitude of dimensions that may occur within in a typical geometric layout.

The location and size of a mini-roundabout central island (and the corresponding width of the circulatory roadway) is usually determined by the S-BUS-40 swept path requirements. The off-tracking of vehicles larger than an S-BUS-40 is accommodated by vehicles encroaching onto the footprint of the central island.

Mini-roundabouts differ from neighborhood traffic (calming) circles by having approach splitter islands on all approaches and a traversable central island. Neighborhood traffic circles may be used to create a low-speed environment within residential subdivisions if they will have the same functional characteristics as a roundabout. The approaches must naturally cause counterclockwise circulation around the central island, have yield control at all entries, and accommodate passage of a WB-50 design vehicle.

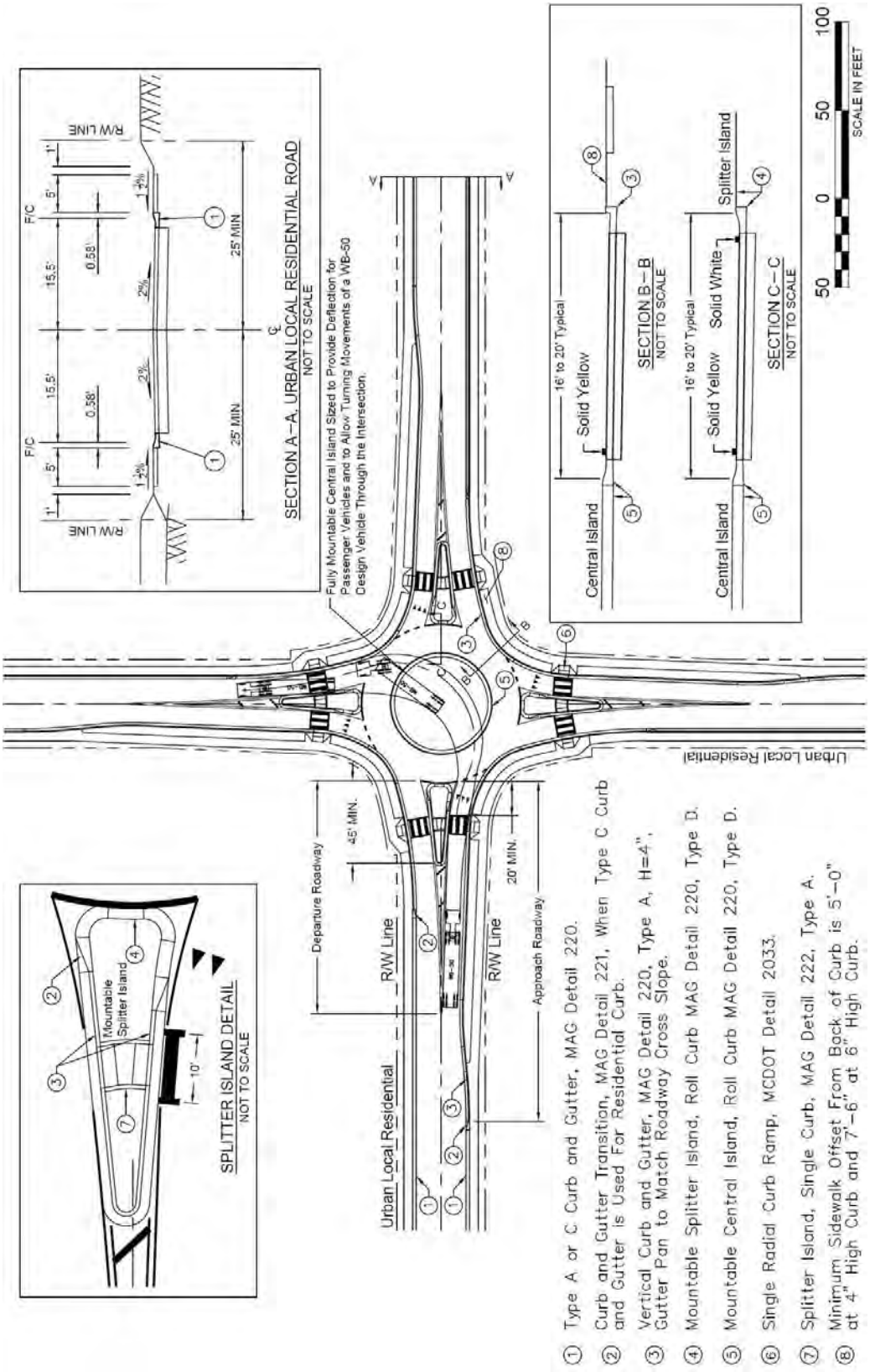

FIGURE 6.11: URBAN MINI-ROUNDABOUT TYPICAL LAYOUT

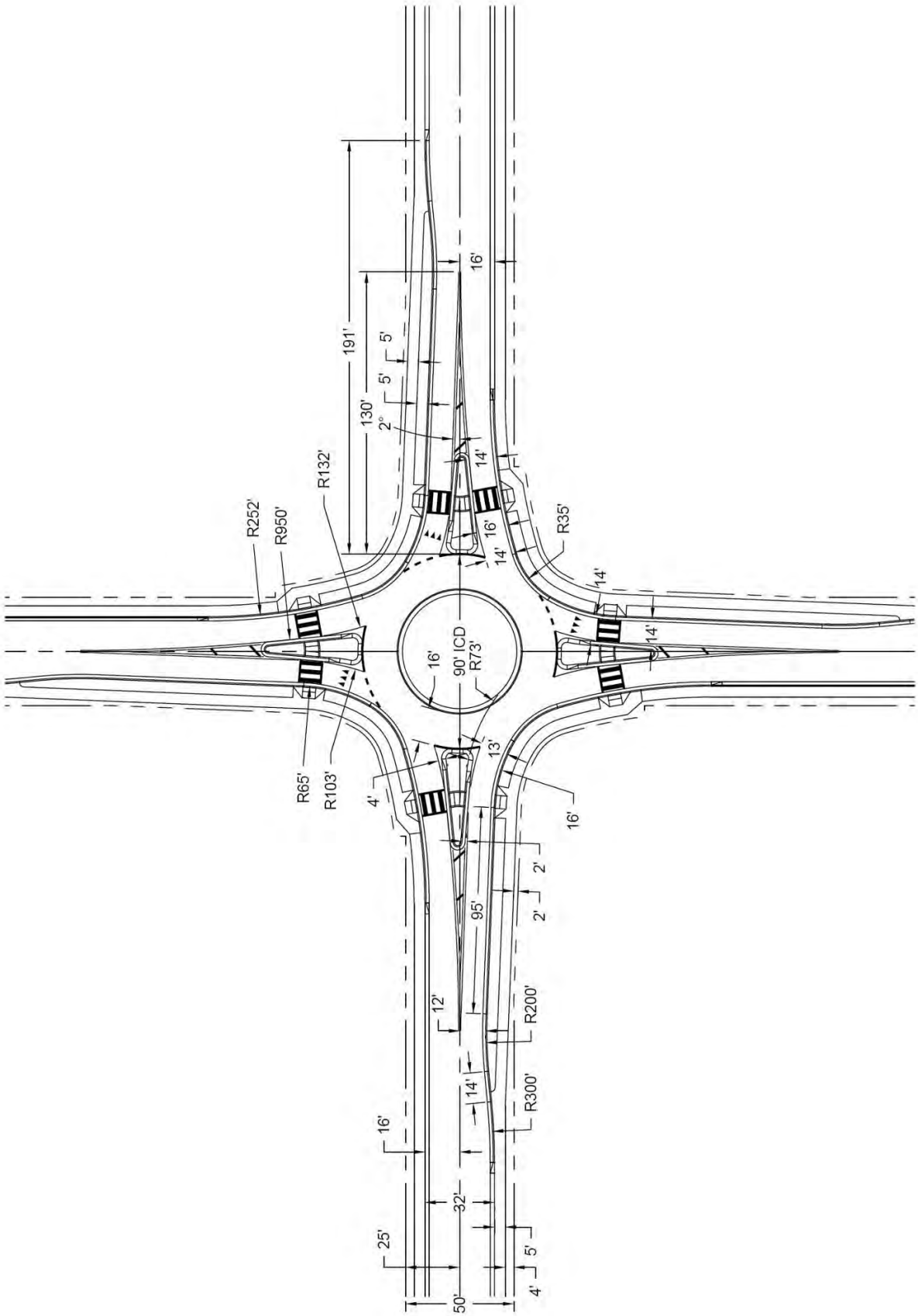

FIGURE 6.12: TYPICAL DIMENSIONS FOR MINI-ROUNDABOUTS

6.2.10 PERFORMANCE CHECKS

DESIGN VEHICLE ACCOMMODATION

Adequacy of the roundabout design to accommodate each permitted movement from each lane of the roundabout by each applicable design vehicle as specified in Table 6.3 is to be determined and documented using appropriate vehicle tracking software. Through and turning movement swept path diagrams for Design Vehicle 1 and for Design Vehicle 2, as each is defined in Figure 6.9 are to be included with every roundabout design submittal. Additional guidance for accommodating the swept path of vehicles is provided in NCHRP Report 672 Sections 6.4.7 and 6.5.7.

FASTEST PATH

The fastest path is the smoothest, flattest path possible for a single vehicle, a passenger car (P), in the absence of other traffic and ignoring all lane markings, to travel through the entry, around the central island, and out the relevant exit. Figure 6.13 identifies and illustrates the five critical path radii that comprise the fastest path for each permitted movement through the roundabout. These radii consist of R1 – the Entry Path radius, R2 – the Circulating Path Radius, R3 – the Exit Path Radius, R4 – the Left Turn Path Radius, and R5 – the Right Turn Path Radius.

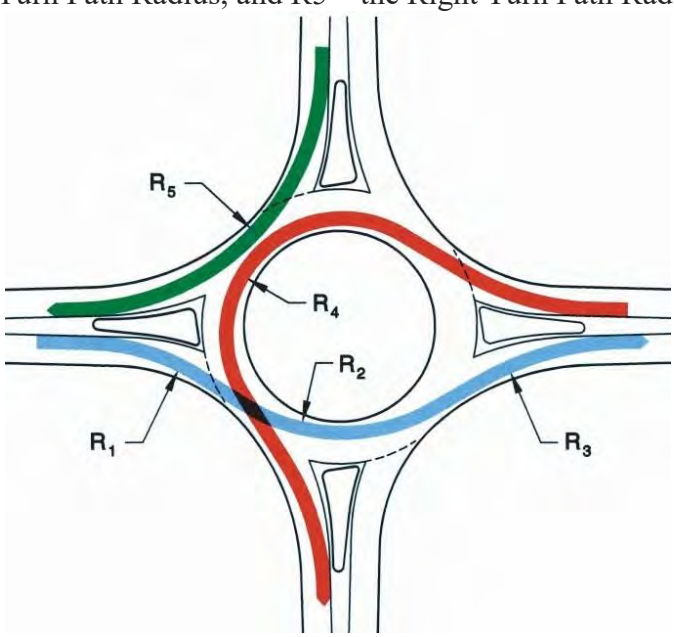

FIGURE 6.13: VEHICLE PATH RADII
Source: NCHRP Exhibit 6-47

The ability for a specific geometric configuration to achieve the speed management objective is determined through a process which involves drawing, measuring the radii, and computing (or pulling from a radius-speed relationship table) fastest path speeds for all movements and comparing the results against applicable design criteria. Scaled and sealed drawing documenting fastest paths for all approaches and all movements are to be included within the design documentation to be submitted with every roundabout plan review submittal. Fast path movements include all left turn movements, all right turn movements, and all through movements. Section 6.7.1 of NCHRP Report 672 provides detailed instructions for one acceptable method for graphically constructing the fastest vehicle paths for all critical movements at a roundabout. Another acceptable method applied to a minor collector-local residential roundabout drawing is

shown in Figure 6.14. As many schematics as needed to show all fastest paths clearly shall be produced and submitted. A table that lists the radii of the component curves of each fastest path and the corresponding design speed for the curve is to accompany the fast path drawings.

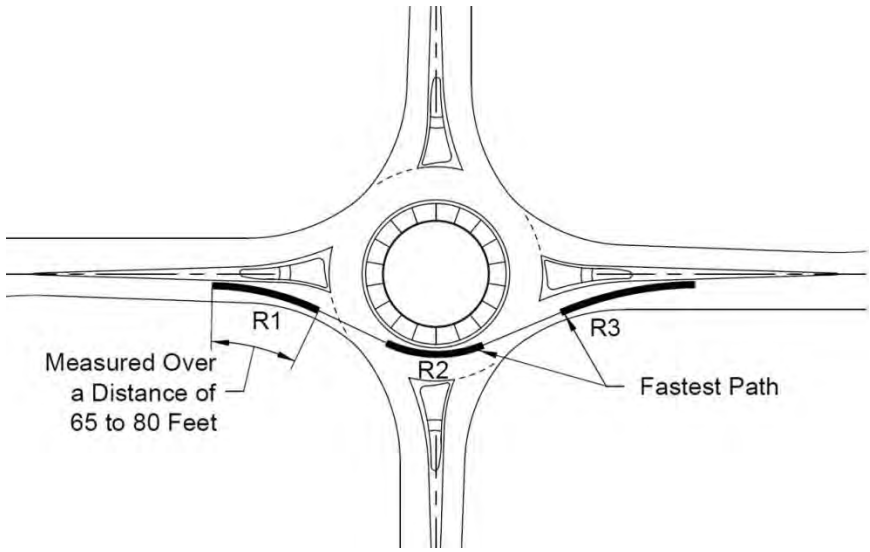

FIGURE 6.14: FASTEST PATH EXHIBIT

STOPPING SIGHT DISTANCE

Adequate stopping sight distance must be provided on the roundabout approaches, within the roundabout circulatory roadway, and to the crosswalks on the exits. Approaching driver sight distance is illustrated in Figure 6.15, circulating driver stopping sight distance is illustrated in Figure 6.16, and exiting driver stopping sight distance is shown in Figure 6.17. Anticipated sight distance through the roundabout can be measured using speed-radius relationship information provided in NCHRP Report 672 Exhibit 6-52, and stopping sight distance criteria provided in Section 5.15 of this Manual.

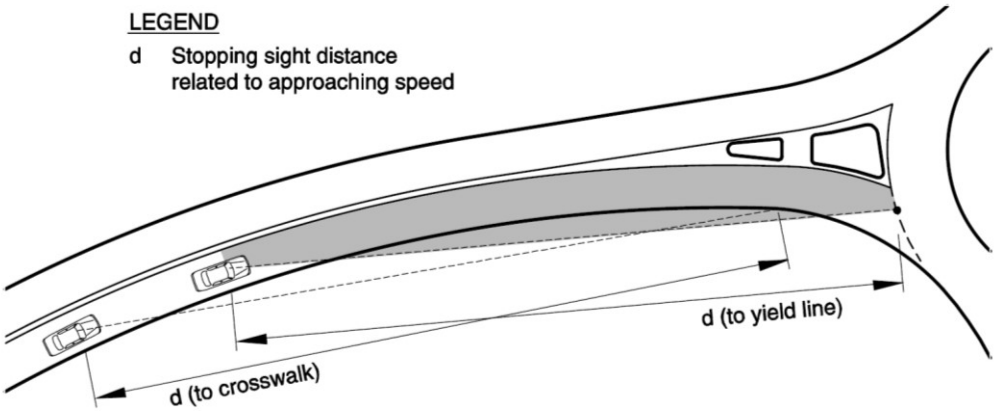

FIGURE 6.15: STOPPING SIGHT DISTANCE ON APPROACH

Source: NCHRP Report 672 Exhibit 6-55

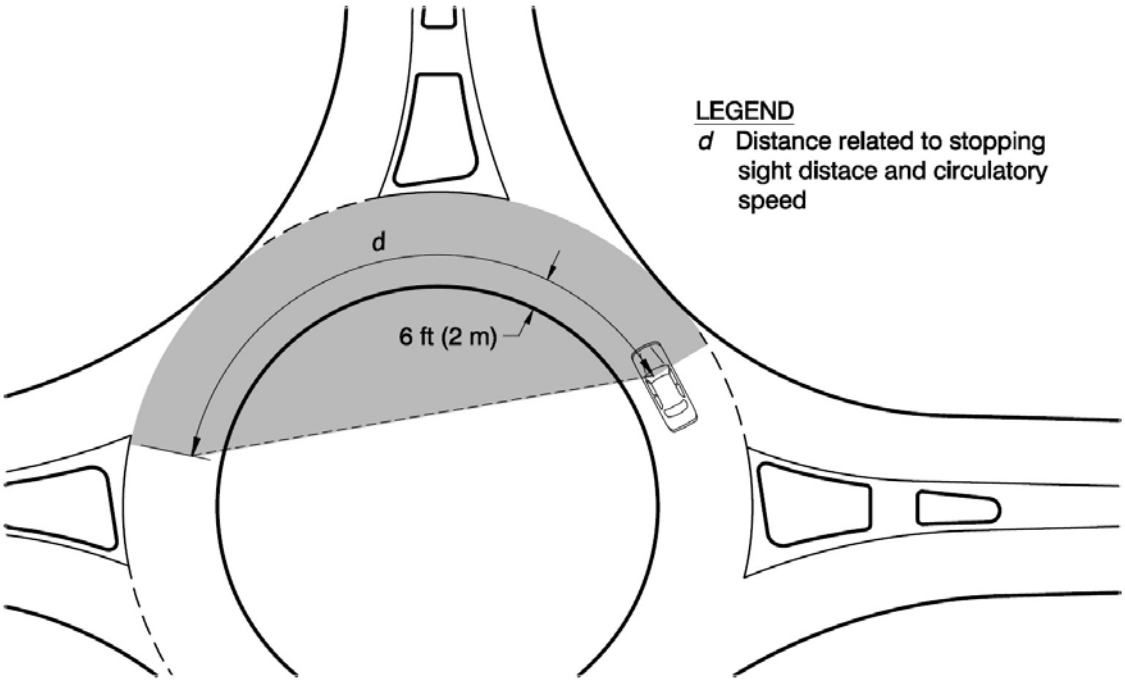

FIGURE 6.16: STOPPING SIGHT DISTANCE ALONG CIRCULATING ROADWAY
Source: NCHRP Report 672 Exhibit 6-56

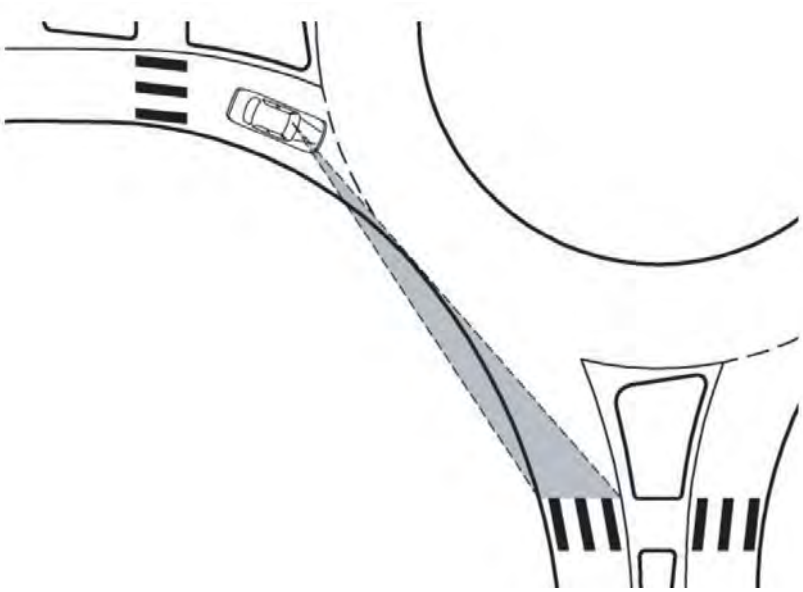

FIGURE 6.17: STOPPING SIGHT DISTANCE TO CROSSWALK ON EXIT
Source: NCHRP Report 672 Exhibit 6-57

INTERSECTION SIGHT DISTANCE

Adequate intersection sight distance (sight triangle) is to be provided for approaching traffic on the circulating roadway and on other approach legs to enable the motorist to determine when to enter the roundabout. Figure 6.18 illustrates this concept.

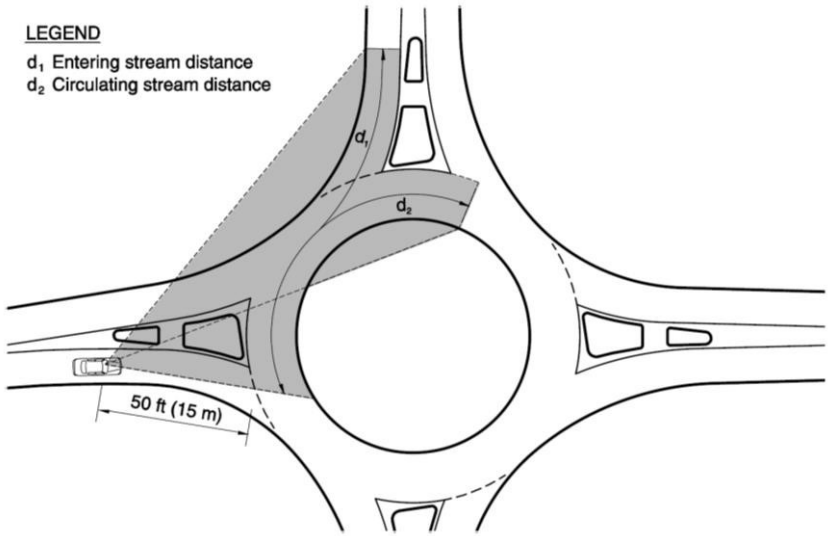

FIGURE 6.18: INTERSECTION SIGHT DISTANCE
Source: NCHRP Report 672 Exhibit 6-58

All roundabout design submittals are to include sight distance diagrams consistent with those presented in Figures 6.15 through 6.18 to cover all approaches and circulating segments of the roundabout, as well as a fully dimensioned composite sight distance diagram for use in defining height restrictions for landscaping and other vertical design features within and near the roundabout. Graphic elements of a composite sight distance diagram are presented in Figure 6.19 Sight distance composite diagrams included with design submittals shall be fully dimensioned.

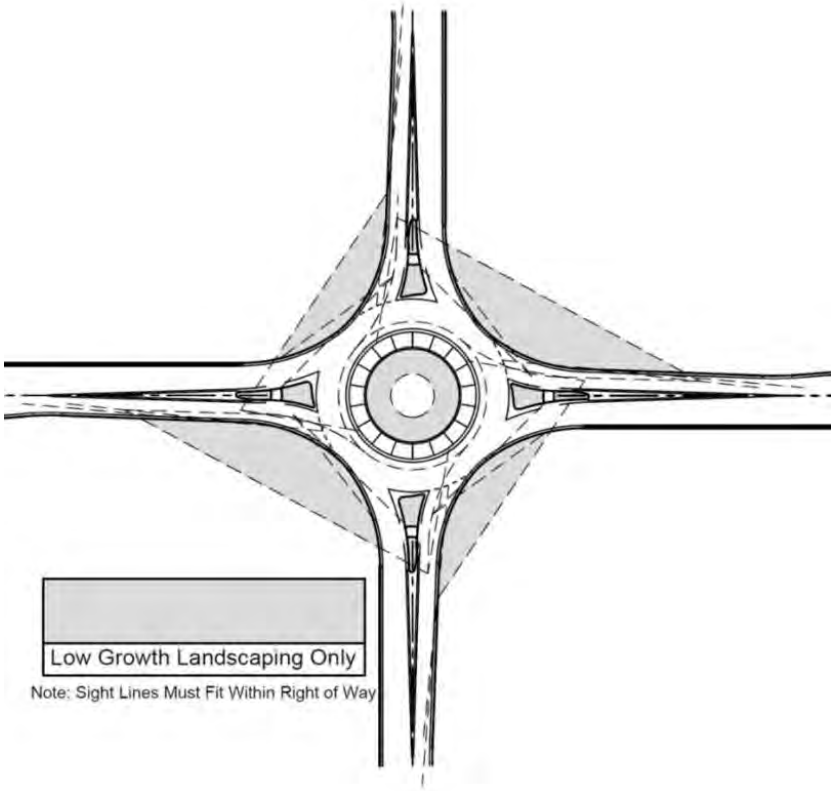

FIGURE 6.19: COMPOSITE SIGHT DISTANCE DIAGRAM (PRIOR TO DIMENSIONING)

6.2.11 VERTICAL CONSIDERATIONS

CROSS SLOPE

The circulating roadway should be designed with a constant slope toward the outside of the roundabout within the range of 1.5% to 2.0%.

Splitter island areas are to have positive drainage, roadways are to have a minimum of 1.0% cross slope and the longitudinal grade shall not exceed 2%. The pedestrian crossing shall be ADA compliant.

CURBING

Roundabout approach and departure roadways shall have vertical curb. The right side of the approach roadway shall have vertical curb throughout the approach deceleration zone. The right side of the departure roadway shall have vertical curb throughout the curbed length of the splitter island. The entire length of the splitter island shall use vertical curb, except on local residential street for mini-roundabouts where splitter islands may need to be traversable to accommodate a WB-50 design vehicle.

The outer curb line of the circulating roadway connecting the approach and departure roadways is to be vertical curb and gutter with a curb height equal to the highest curb height of the connected curb lines.

The central island exterior curb (adjacent to circulating roadway) shall be roll curbing (MAG Detail 220, Type D).

Six inch (6”) high vertical curb shall be used for the truck apron’s interior curb located along the perimeter of the non-traversable portion of the central island.

The pedestrian walkway through the splitter island shall have along each side vertical curb matching the height of the splitter island curbing.

DRAINAGE

Drainage structures when needed should be placed upstream from crosswalks, placement within the entry and exit radii or within the circulatory roadway should be avoided. A primary concern with having inlets located within or adjacent to the circulatory roadway are traffic restrictions required during maintenance operations.

GEOMETRIC LAYOUT CONTROL

The use of construction centerline Stations and Offsets to define curb line geometry for roundabouts shall be supplemented or replaced by curve data along the face of curb. Curve data shall consist of radius (R), tangent length (T), central angle delta (Δ), and arc length (L). As a minimum, curve data shall be provided along all roundabout exterior curb lines from the Entry Radius curve through the Exit Radius curve and construction centerline stations and offsets shall be provided at the beginning of the Entry Radius curve and at the end of the Exit Radius curve.

ELEVATION CONTROL

Elevation control is to be provided at each curb PC, PT, PRC, and PCC. For the central island curbing (exterior curb and inside truck apron curb) the elevation control points are to include points located by the intersection of the construction centerline extension of each roundabout leg and also along the angle that bisects the centerline extensions of the roundabout legs where the bisecting line intersect the central island exterior curb and the outer curb line of the circulatory road. An example of the application of this guidance is presented in Figure 6.20.

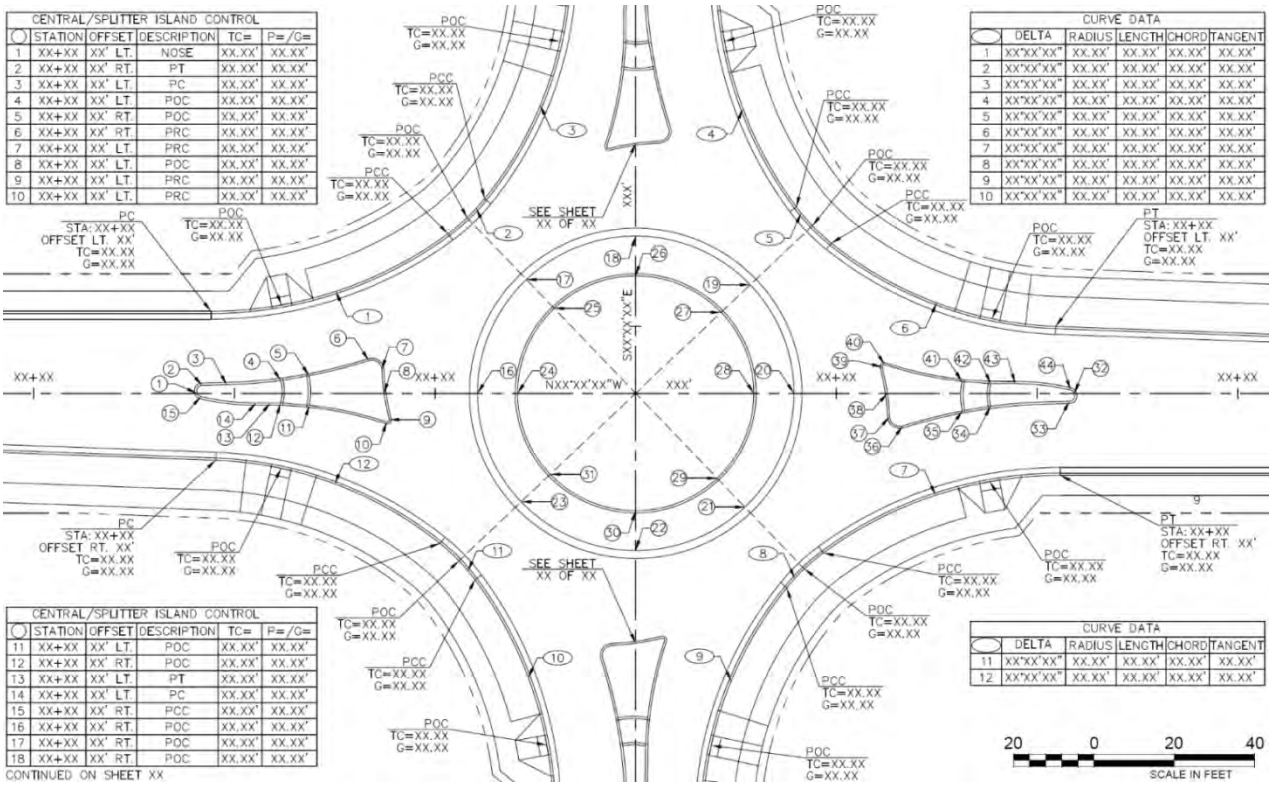

FIGURE 6.20: ELEVATION CONTROL REQUIREMENTS

6.2.12 OTHER DESIGN DETAILS

PEDESTRIANS AND BICYCLISTS

Sidewalks shall be provided on all roundabout approaches that connect to existing or planned pedestrian facilities, or where there is anticipated pedestrian demand based on proposed development and/or adjacent land use. Crosswalks and refuge areas shall be provided to connect all roundabout approaches that have sidewalks or mixed use paths. A buffer shall be provided between roadway curb and the sidewalk. See Figures 6.5, 6.6 and 6.13 for sidewalk setback requirements which vary based on adjacent curb height.

Where bicycle lanes are used on approach roadways to multilane roundabouts, optional use bicycle ramps shall be provided to allow bicyclists to use the sidewalk or other adjacent pathway to negotiate the roundabout. Where optional use bicycle ramps are provided, the sidewalk width through the roundabout shall be increased by a minimum of three feet (3'). Between the bicycle street exit and entrance ramps, the minimum sidewalk width through roundabouts shall be eight feet (8'). The bottom width of curb ramps located along widened portions of walkways shall match

the full width of the widened walkway. Optional use bike ramps may be required at urban single-lane roundabouts where high traffic volumes are anticipated. Further information for the design of bicycle accommodations for roundabouts is provided in NCHRP Report 672, Section 6.8.2.

APPENDIX R
APPROVED PRODUCTS LIST

CITY OF MARICOPA APPROVED PRODUCT LIST

PRODUCT CATEGORY	MODEL	MANUFACTURER
Wastewater Manhole Corrosion-Protective Coating Systems	Sauereisen Sewergard Lining No. 210	Sauereisen Cements
	Sewer Shield 150 Epoxy Lining	Environmental Coatings
	Raven 405 Epoxy Lining	Raven Lining Systems
	Neopoxy NPR 5300 Series Epoxy Lining	Neopoxy International
Wastewater Manhole Pesticide Coating System	Insecta Insecticide Coating	Golden Bell Products
Water Valves		Clow
		Mueller
		Kennedy
		American Flow Control
Fire Hydrants	Super Centurion	Mueller
	Medallion	Clow
	Waterous Pacer	American
		Kennedy
Water Meter Adapters Gaskets for DIP		Ford
	Field Lok 350	US Pipe
		Romac Industries
		Clow Water Systems
		Tyler Union
		Mcwane
Restrained Joints (For Pipes & Fittings)	Megalug, Series 2000 PV	EBAA Iron
	Tuf Grip	Tyler Union
	TR Flex Gripper Ring & TR Flex Joint	US Pipe
	One Lok SLDE Series	Sigma Corporation
	Stargrip Series	Star Pipe Products
	Fast Grip & Flex-Ring Joint	American Cast Iron Company
	Uni-Flange	Ford
		Clow Water Systems
Water Pipe Materials		American Cast Iron Pipe
		Clow Water Services
		US Pipe
SS Tapping Sleeves		Ford
Water Meter Angle Ball Valves and CORP Stops		Ford
		A Y McDonald
		Mueller
		Kennedy
		Clow

Combination Air/Vacuum Assemblies	140, 145C, 147, 148 D-020/023/026/040/060	APCO ARI
PRV		Wilkins Watts
Water Main Casing		Calpico Cascade
Clamps for Water Service		Ford Romac JCM
Bolted Sleeve Type Couplings for Plain End Pipe		Ford Cascade Romac JCM
Wastewater Manhole Corrosion Protective Inserts		Sewer Shield Composites
Service Saddles		Jones Mueller AY McDonald Romac Ford

APPENDIX S
ARIZONA PARKWAY
DESIGN GUIDE
RECOMMENDATIONS

Design Guideline Recommendations
for the Arizona Parkway

Prepared for:
Maricopa County
Department of Transportation

Submitted by:

DMJM HARRIS | AECOM

2777 East Camelback Road
Suite 200
Phoenix, Arizona 85016

August, 2008

Design Guideline Recommendations for the Arizona Parkway

August, 2008

Submitted by:

DMJM HARRIS | AECOM

2777 E. Camelback Road
Phoenix, AZ 85016

TABLE OF CONTENTS

SECTION 1 – INTRODUCTION 1
SECTION 2 – CROSS-SECTIONAL ELEMENTS 3
Median Width 3
Lane Widths 5
Shoulder Width 5
Edge Treatments 5
Right-of-Way 5
Utility Easements 5
Cross-Section Elements Summary 6
Special Considerations in Restricted Situations 6
SECTION 3 – ELEMENTS OF DESIGN 7
Design Speed 7
Design Vehicle 7
Superelevation 7
Clear Zone 7
Sight Distances 7
SECTION 4 – ACCESS MANAGEMENT 8
Median Opening and Directional Crossover Spacing 8
Driveway Spacing 10
Corner Clearances 10
SECTION 5 – MEDIAN OPENING GEOMETRICS 12
Major Intersections 12
Directional Crossovers 12
SECTION 6 – MULTIMODAL ACCOMMODATIONS 17
Accommodations for Pedestrians and Bicycles 17
Accommodations for Buses 17
Accommodations for Light Rail Transit 17
SECTION 7 – TRAFFIC ELEMENTS 18
Signing 18
Signals 18

SECTION 8 – OTHER CONSIDERATIONS 24
Facility Transitions 24
Median Grading 24
Drainage 24
Grade Separated Crossings 25
SECTION 9 – PHASING 26
Full-Width Phased Implementation 26
Half-Street Phased Implementation 26
Structures 27
SECTION 10 – TYPICAL INTERSECTION CONFIGURATIONS 30
Collector Intersections 30
Arterial Intersections 30
Parkway Intersections 33
APPENDIX 35

LIST OF FIGURES

Figure 1 Metro Parkway at Ryan Road 1
Figure 2 Parkway Typical Sections 4
Figure 3 Typical Urban Parkway Access Plan 9
Figure 4 General Placement of Directional Crossovers 10
Figure 5 Entry Maneuvers 11
Figure 6 Geometrics for Typical Parkway/Arterial Intersection 13
Figure 7 Geometrics for Typical Urban Single-Lane Directional Crossover 14
Figure 8 Geometrics for Typical Urban Dual-Lane Directional Crossover 15
Figure 9 Geometrics for Typical Rural Single-Lane Directional Crossover 16
Figure 10 Typical Signing for Parkway/Arterial Intersection 20
Figure 11 Typical Signing for Single-Lane Stop Controlled Crossover 21
Figure 12 Typical Signing for Dual-Lane Stop Controlled Crossover 22
Figure 13 Typical Signal Layouts 23
Figure 14 Phased Urban Typical Sections 28
Figure 15 Interim Urban Directional Crossover 29
Figure 16 Typical Collector Intersections 31
Figure 17 Typical Arterial Intersections 32
Figure 18 Typical Parkway Intersections 34

LIST OF TABLES

Table 1 Minimum Median Widths 3
Table 2 Cross-Sectional Summary 6
Table 3 Minimum Design Speeds 7
Table 4 Progression Speed as a Function of Signal Spacing & Cycle Length 18

SECTION 1 – INTRODUCTION

Recent long-range transportation planning efforts by the Maricopa Association of Governments (MAG), City of Surprise, Town of Buckeye, and Maricopa Department of Transportation (MCDOT) have identified the need for a new roadway facility type in order to handle projected travel demands. This new facility type has been identified as the "Arizona Parkway" which will include the use of an intersection treatment known as the indirect left-turn (also known as the Michigan u-turn or median u-turn). This intersection treatment eliminates left-turns at all cross-streets and utilizes a wide median in order to facilitate u-turns downstream of intersections. Drivers desiring to turn left from the major road (Parkway) onto an intersecting cross-street pass through the signalized intersection, execute a u-turn at the median opening downstream of the intersection and execute a right-turn at the cross-street. Drivers desiring to turn left from the cross-street onto the major street (Parkway) turn right at the signalized intersection, execute a u-turn at the median opening downstream of the intersection and proceed back through the intersection. Shown below is an example of a typical indirect left-turn intersection. By eliminating left-turns at the intersections, the traffic signals can be operated on a two-phase cycle which promotes signal progression along a corridor and allows more signal green time to be provided to the through movements, thus enhancing the traffic operations along the Parkway.

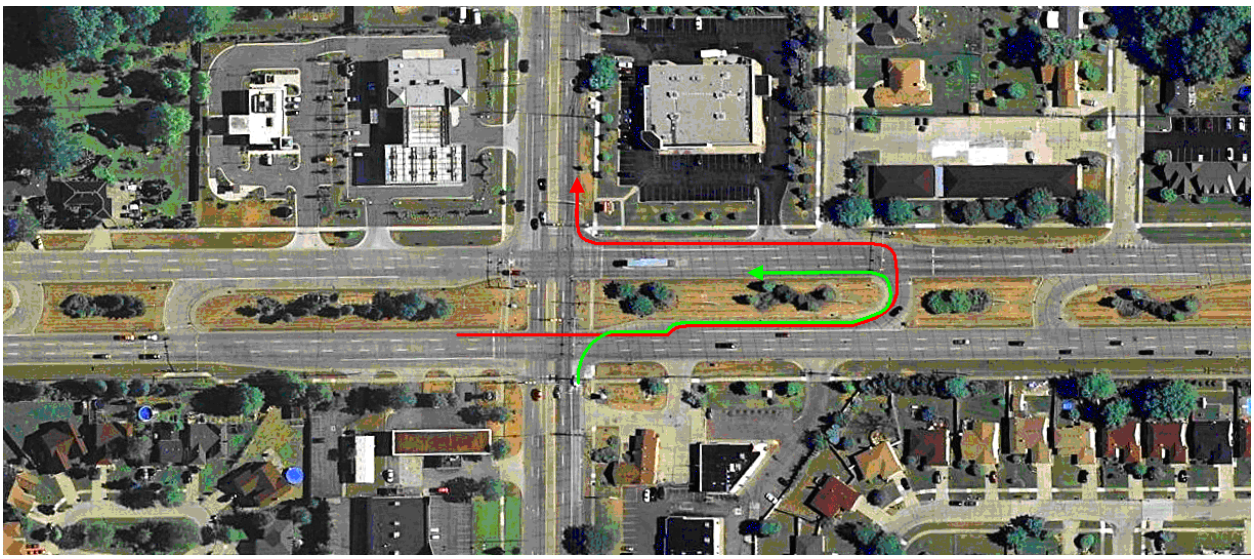

Figure 1
Metro Parkway at Ryan Road
(Source: Maps.Google.com)

Key
Red Line – Parkway traffic turning left onto crossroad
Green Line – crossroad traffic turning left onto Parkway

The purpose of this study is to develop design guideline recommendations for the implementation of the Arizona Parkway. The recommendations presented herein should be considered as minimums. The design for a specific roadway should normally equal or exceed the recommendations in this document. The recommendations contained in this document cannot apply to all situations as every project is unique and typically require their own variations to site-specific conditions.

This document represents the recommendations developed through a Technical Advisory Committee (TAC) which included:

Tim Oliver, Maricopa County Department of Transportation
Nicolaas Swart, Maricopa County Department of Transportation
Robert Herz, Maricopa County Department of Transportation
Michele Kogl, Maricopa County Department of Transportation
Dr. Robert Maki, City of Surprise
Randall Overmyer, City of Surprise
Woody Scoutten, W.C. Scoutten
Michael Manola, Town of Buckeye
Bob Hazlett, Maricopa Association of Governments
Rodney Bragg, DMJM Harris
Mark Milstone, DMJM Harris

Additional agency staff who contributed to the TAC include: James Sargent (MCDOT); Dr. John Abraham (City of Surprise); Renee Probst (MCDOT); Alex Arriaga (MCDOT); and George Williams (Town of Buckeye).

SECTION 2 – CROSS-SECTIONAL ELEMENTS

The recommended Parkway typical sections for both urban and rural areas are shown in Figure 2 (Parkway Typical Sections). The urban typical section accommodates the addition of a fourth lane in each direction of travel by widening into the median – see Section 9 (Phasing) for additional information regarding phased implementation.

Median Width

The median width is a key feature of the cross-section as it allows large trucks to execute u-turns at the directional crossovers. The median width is controlled by the design vehicle and the number of receiving lanes adjacent to a u-turn location. The recommended minimum median widths are shown in Table 1 below. The WB-50 design vehicle should typically be used to size the median.

Table 1
Minimum Median Widths

Type of Maneuver		M = Min. width of median (feet) for design vehicle			
		P	SU	BUS	WB-50
Into 1st Lane	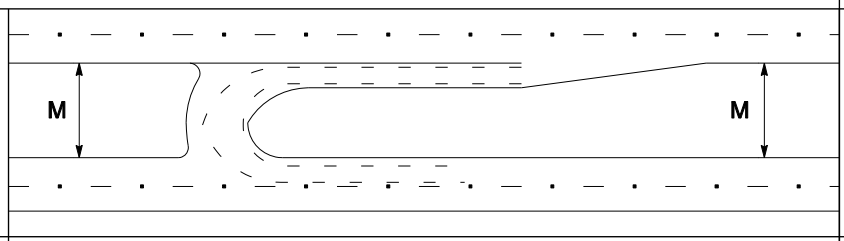	44'	76'	80'	82'
Into 2nd Lane	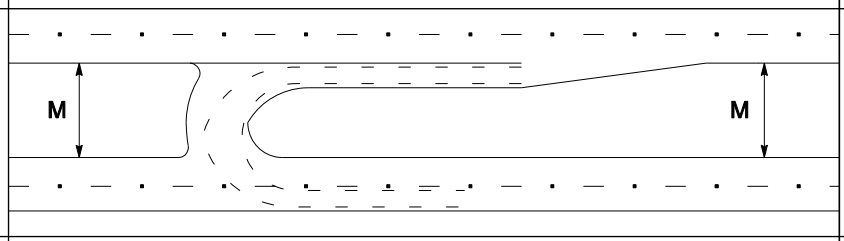	32'	64'	68'	70'
Into 3rd Lane	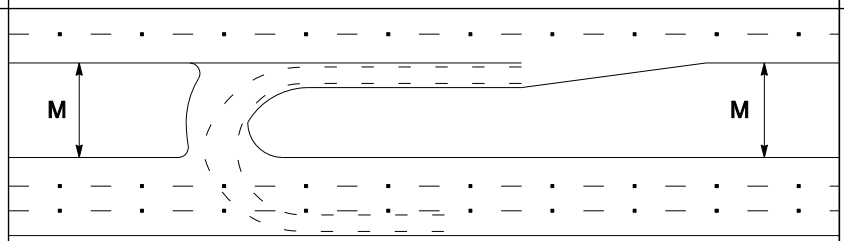	22'	54'	58'	60'
Into 4th Lane	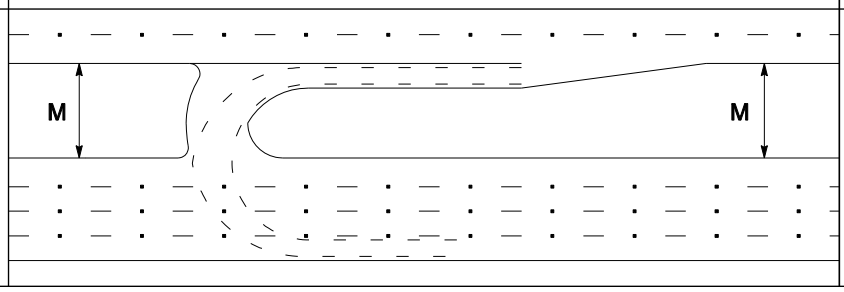	16'*	44'	48'	50'

*Based on 4' min. median width
Note: Based on 12' wide receiving lanes

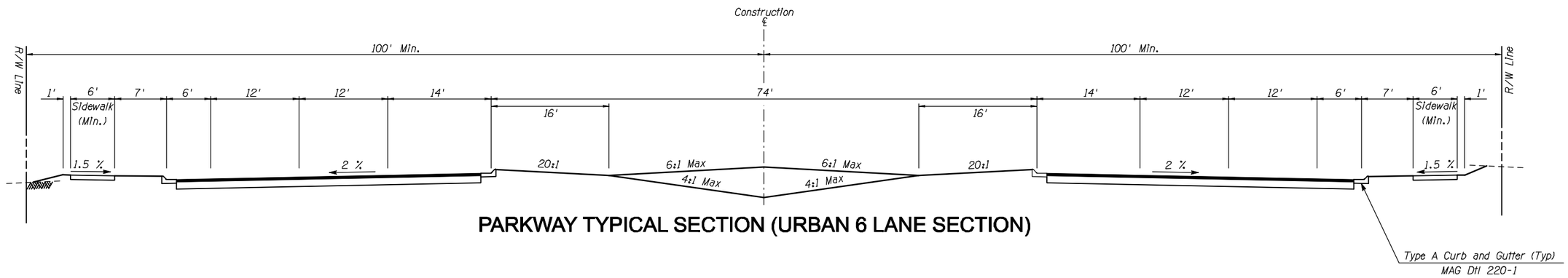

PARKWAY TYPICAL SECTION (URBAN 6 LANE SECTION)

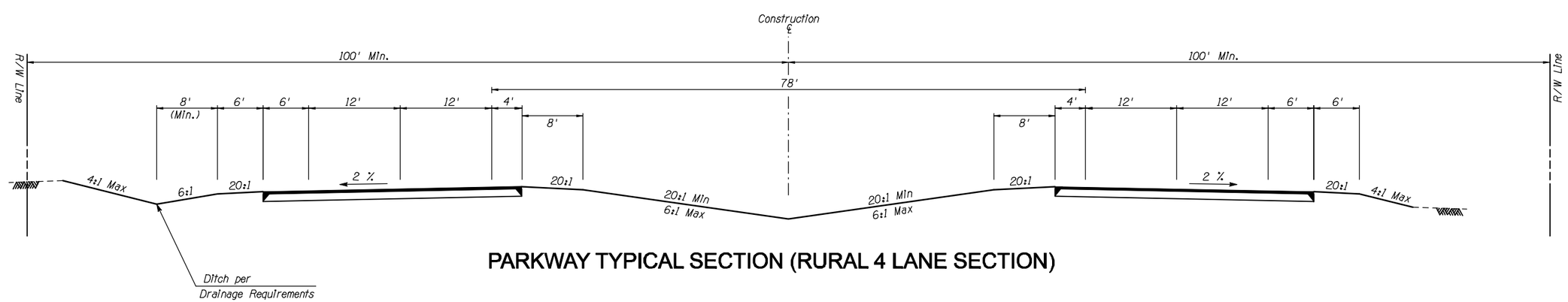

PARKWAY TYPICAL SECTION (RURAL 4 LANE SECTION)

Note:
When curb is present, dimensions are to face of curb

Not to Scale

FIGURE 2 - PARKWAY TYPICAL SECTIONS

DESIGN FILE: rs\60040833\Prod\civ\RepTyp01.dgn

The values shown in Table 1 (Minimum Median Widths) are based on the design vehicle being in the center of the departure and receiving lanes. The minimum centerline turning radius for a WB-50 design vehicle is 41' while the minimum radius of the front overhang is approximately 46'. These radii result in minimum swept paths of 82' and 92' for the centerline and front overhang, respectively. However, based on the geometrics of the directional median crossover, these values both increase to approximately 90' and 100' (an average increase of 9%), respectively, so the truck does not encroach into the median while passing through the crossover. These minimum radii values should be used to determine the minimum median width if variations are made to the receiving roadway width.

Lane Widths

It is recommended the travel lanes be 12' wide, exclusive of gutters/curbs. In restrictive situations, the travel lane width can be reduced to 11' (see below for additional information in restrictive areas).

Shoulder Width

In urban areas, the recommended inside shoulder width is 2' (including gutter, if applicable) while the recommended outside shoulder width is 6' (including gutter). In rural areas, the recommended inside paved shoulder width is 4' while the recommended outside paved shoulder width is 6'.

Edge Treatments

Per current local agency practice, MAG Type A curb and gutter (per MAG Detail 220-1) is recommended on the edge of the roadway in urban settings. On the inside (median) edge, a single curb (MAG Detail 222) is an acceptable alternative to curb and gutter. In rural settings, a MAG thickened edge should be used instead of curb, except at the directional crossovers where curb should be used. See Section 5 (Median Opening Geometrics) for additional information regarding the directional crossovers.

Right-of-Way

The standard minimum roadway right-of-way corridor should be 200'. Additional right-of-way and/or easements may be needed for turn lanes; bus bays; drainage structures and drainage facilities; and for side slopes, utilities, or landscaping.

Utility Easements

An additional 8' (minimum) public utility easement (PUE) outside of the Parkway right-of-way is suggested on each side of the Parkway. Utilities may be located in the median, but they should not obstruct sight lines, hinder drainage facilities nor require relocation as a result of future roadway widening into the median.

Cross-Section Elements Summary

Table 2 summarizes the recommended cross-sectional design elements discussed above.

Table 2
Cross-Sectional Summary

Criteria	Urban	Rural
Median Width	Varies based on number of lanes	Varies based on number of lanes
Lane Width	12' (exclusive of gutters/curbs); 11' minimum	12'; 11' minimum
Shoulder Width	Inside shoulder width is 2' (including gutter) while the outside shoulder width is 6' (including gutter)	Inside paved shoulder width is 4' while the outside paved shoulder width is 6'
Edge Treatment	Curb and gutter per MAG Detail 220-1, Type A; single curb allowable along median	Thickened Edge per MAG Detail 201
Right-of-Way	200' minimum	200' minimum

Special Considerations in Restricted Situations

The standard minimum roadway right-of-way corridor should be 200'. The primary cross-sectional element dictating the right-of-way corridor is the median width. The median widths shown in Table 1 (Minimum Median Widths) will accommodate a WB-50 design vehicle. In restrictive areas, it may not be possible to obtain the 200' roadway right-of-way. In these locations, it is possible to minimize the right-of-way footprint by reducing the median width, and therefore not accommodating the larger design vehicles at the directional crossovers within restricted segments. Some options include:

- Prohibiting large trucks from making u-turns at specific crossover locations with regulatory signs; or
- Not providing crossovers within the restrictive area.

In addition, the travel lanes can be reduced to 11', not including the gutter, and the distance from the back-of-sidewalk to the right-of-way line can be reduced. However, reducing the lane widths from 12' to 11' on the receiving side of the roadway at the crossover location effectively reduces the width available for a vehicle to execute a u-turn.

Additional right-of-way and/or easements may be needed for turn lanes; bus bays; drainage structures and drainage facilities; and for side slopes, utilities, or landscaping.

SECTION 3 – ELEMENTS OF DESIGN

A Parkway facility is basically a principal arterial with the indirect left-turn intersection treatment implemented on a corridor basis. Therefore, many of the design elements (design speed, design vehicle, etc.) recommended for the Parkway match the current practices for arterials.

Design Speed

The selection of a design speed typically depends on the facility classification and terrain through which the facility traverses. The design speed then dictates a number of geometric design parameters including, but not limited to, stopping sight distance, intersection sight distance, horizontal and vertical curvature, and taper rates.

For Parkways, the recommended minimum design speeds are shown in Table 3.

Table 3
Minimum Design Speeds

Terrain	Urban	Rural
Level	55 mph	65 mph
Rolling	50 mph	60 mph
Mountainous	45 mph	55 mph

Design Vehicle

The WB-50 is the recommended minimum design vehicle for intersections and median openings.

Superelevation

In urban areas, a maximum superelevation rate of 4% is recommended. On rural facilities, a maximum superelevation rate of 8% is recommended.

Clear Zone

The clear zone, or roadside recovery area, should be determined based on design speed, traffic volume and side slopes in accordance with the AASHTO *Roadside Design Guide*. For a design speed of 55 mph, a clear zone of 22’ to 32’ is recommended for a fill condition based on the side slope, and a clear zone of 16’ to 24’ is recommended for a cut condition based on the side slope. These distances increase up to a minimum of 30’ in a fill condition and a minimum of 22’ in a cut condition as the design speed increases up to 65 mph.

Sight Distances

Sufficient sight distance should be provided at the intersections as well as the directional crossovers (u-turn locations) in accordance with the current AASHTO Green Book.

SECTION 4 – ACCESS MANAGEMENT

The following access management guidelines should be considered as a minimum and may be supplemented or superseded by the guidelines and policies of the local agency which has jurisdiction over the roadway.

The following general access management guidelines apply to the Parkway facility:

- A divided cross-section with a 74' typical median (exclusive of turn lanes) (see Section 2 – Cross-Sectional Elements for additional information on the median width and the typical section).
- U-turn directional crossovers restricted to a maximum of eight per mile.
- Left-turns in any direction are prohibited at all intersections (full median break).
- Left-turns from a side-street or driveway onto the Parkway are prohibited.
- Left-turns from the Parkway to a side-street or driveway are discouraged due to conflicts between u-turns and right-turns. However, this can be accommodated by aligning the u-turn crossover with the side-street or driveway in order to facilitate left turns and u-turns.
- Intersections (full median breaks) preferably restricted to one-mile spacing and a minimum spacing of half-mile.
- No on-street parking.

During an interim stage when the indirect left-turn is not fully implemented, direct left-turns may be allowed. See Section 9 (Phasing) for additional information regarding phased implementation.

Median Opening and Directional Crossover Spacing

Full median openings are only recommended at intersections with arterial or major collector streets. Left-turns will not be allowed at the full median breaks. All full median breaks will be signalized, based on MUTCD warrants. The recommended full median opening spacing is one mile while the minimum spacing is one-half mile.

Figure 3 (Typical Urban Parkway Access Plan) shows a typical one-mile segment of an urban Parkway with general information regarding access management for a typical initial configuration (with a limited number of crossovers) and for a typical future configuration (with the maximum number of crossovers). The recommended offset from the cross-street centerline to the first directional crossover is 660' (±100') downstream of a major intersection as shown in Figure 4 (General Placement of Directional Crossovers). In addition, for an urban area, a minimum 660' (±100') spacing is recommended along the corridor. In rural areas, a minimum 1200' (±200') spacing is recommended along the corridor.

It is undesirable to align public side-streets or driveways with the crossovers due to the vehicle conflicts between the right-turns (onto the Parkway) and the u-turns. However, in some situations, crossovers can coincide with a public side-street or a driveway to allow inbound left-turns (from Parkway to driveway or side-street) and u-turns. If allowed, the approach of the side-street or driveway should be blocked by the median on the Parkway, thus encouraging drivers to turn right, and right-turn channelization (raised median) should be installed on the approach.

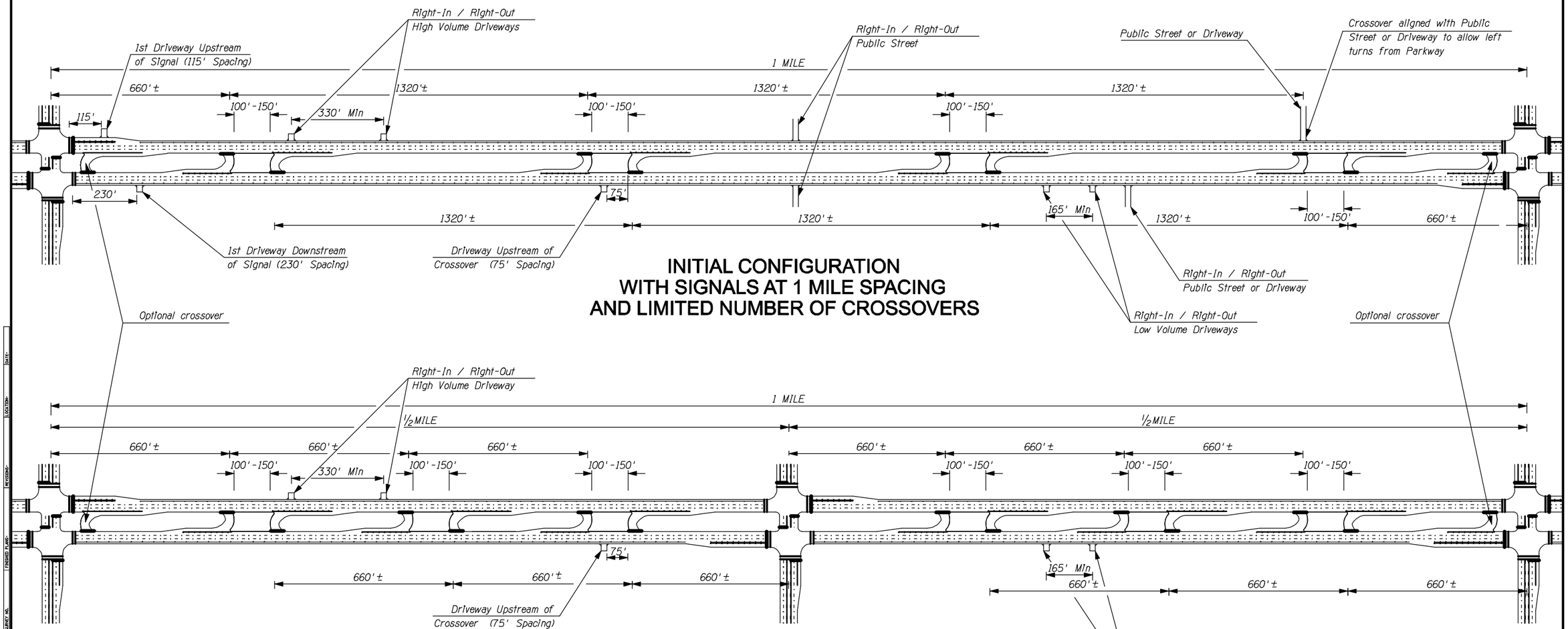

INITIAL CONFIGURATION WITH SIGNALS AT 1 MILE SPACING AND LIMITED NUMBER OF CROSSOVERS

FUTURE CONFIGURATION WITH SIGNALS AT 1/2 MILE SPACING AND MAXIMUM NUMBER OF CROSSOVERS

NOTES:

1. Not to scale.
2. Crossover spacing from signal and between crossovers should be a minimum of 660'(±100')
3. Spacing between back to back crossovers is 100' minimum.
4. 330' driveway spacing for high-volume driveways and 165' driveway spacing for low-volume driveways.

FIGURE 3 - TYPICAL URBAN PARKWAY ACCESS PLAN

DESIGN FILE: rs\60040833\Prod\civ\RepSeg01.dgn

Figure 4
General Placement of Directional Crossovers

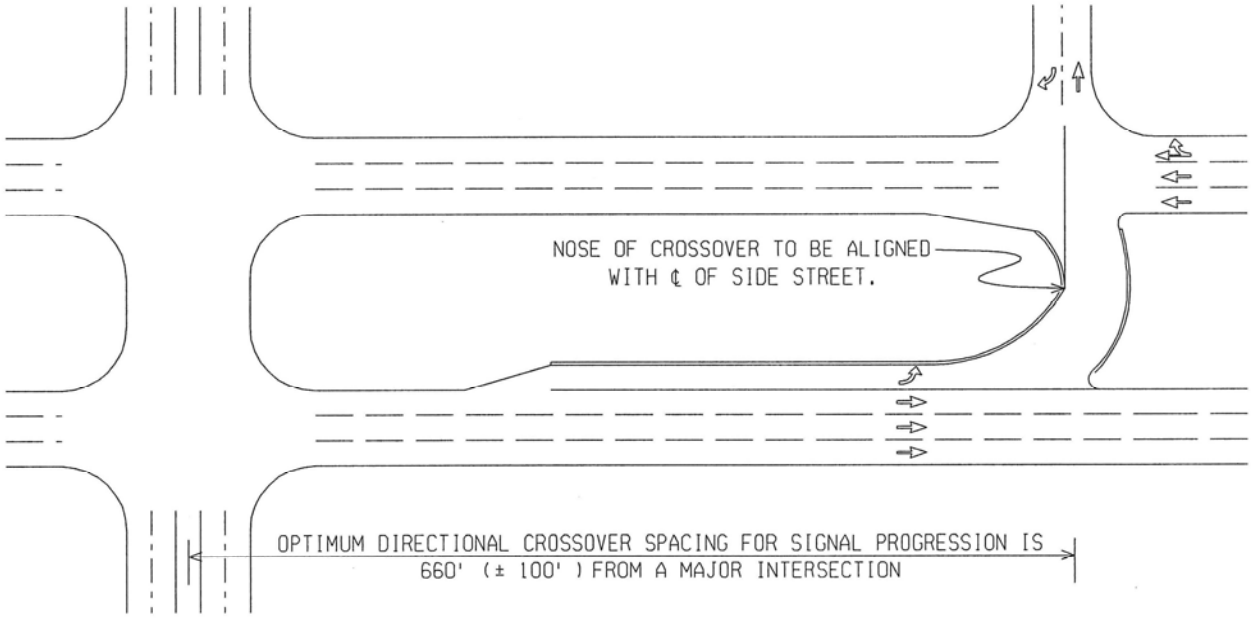

A directional crossover can be located immediately upstream of a major/signalized intersection. A crossover in this location allows some traffic to make a u-turn maneuver prior to entering the major intersection and therefore removes that traffic from passing through the intersection twice (once prior to the u-turn and once after the u-turn). However, a crossover in this location creates additional conflicts with right-turn traffic from the cross-street. Crossovers in these locations should be considered when warranted by site-specific conditions. A crossover in this location is discouraged when driveways exist or are planned on the receiving side of the roadway.

Driveway Spacing

For a low-volume driveway, a 165' minimum spacing (from centerline to centerline) is recommended. For a high-volume driveway, a 330' minimum spacing (from centerline to centerline) is recommended. The typical driveway will be limited to right-in/right-out maneuvers.

Corner Clearances

Upstream of a signalized intersection, the recommended corner clearance is 115' from the edge of the cross-street to the edge of the first right-in/right-out driveway. Downstream of a signalized intersection, the recommended corner clearance is 230' from the edge of the cross-street to the edge of the first right-in/right-out driveway.

In addition, it is recommended access connections be located directly opposite or downstream from a directional crossover as shown in Figure 5 (Entry Maneuvers). Driveway access should be located a minimum of 75' upstream of the crossover to discourage wrong way maneuvers.

Figure 5
Entry Maneuvers

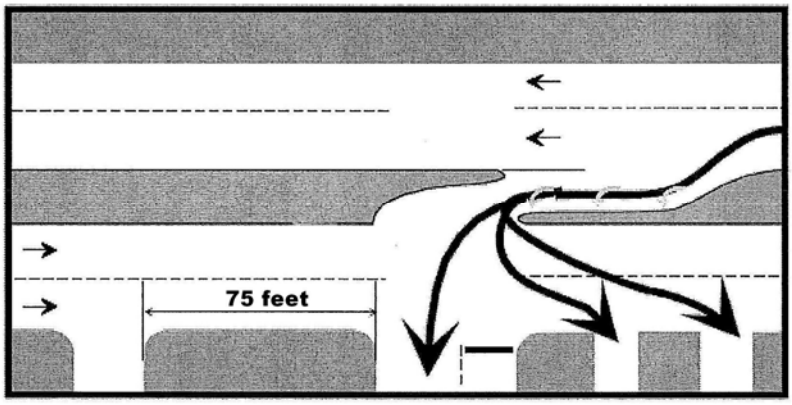

SECTION 5 – MEDIAN OPENING GEOMETRICS

This section will provide suggested geometrics for full median openings at major intersections and for single-lane and dual-lane directional crossovers along urban and rural Parkways.

Major Intersections

At major intersections (full median breaks), left-turns are not allowed, so the intersection is designed to promote through movements and right-turns while discouraging left-turns, as shown in Figure 6 (Geometrics for Typical Parkway/Arterial Intersections). Due to the width of the median, major intersections are actually two intersections spaced close together.

Directional Crossovers

The directional crossovers allow u-turns in one direction of travel and are generally designed to accommodate a WB-50 design vehicle. For a single lane crossover, the opening should be 30' wide and both edges should contain compound curves as shown in Figure 7 (Geometrics for Typical Urban Single-Lane Directional Crossover). For a dual-lane crossover, the opening should be 36' wide as shown in Figure 8 (Geometrics for Typical Urban Dual-Lane Directional Crossover). Figure 9 (Geometrics for Typical Rural Single-Lane Directional Crossover) shows a single-lane crossover in a rural area. The minimum spacing between back-to-back crossovers in opposite directions should be 100' with a desirable spacing of 150'. In both urban and rural conditions, the median edges near the directional crossover should include curb which is easily mountable by trucks. In addition, the median on the inside of the crossover should include a concrete truck apron.

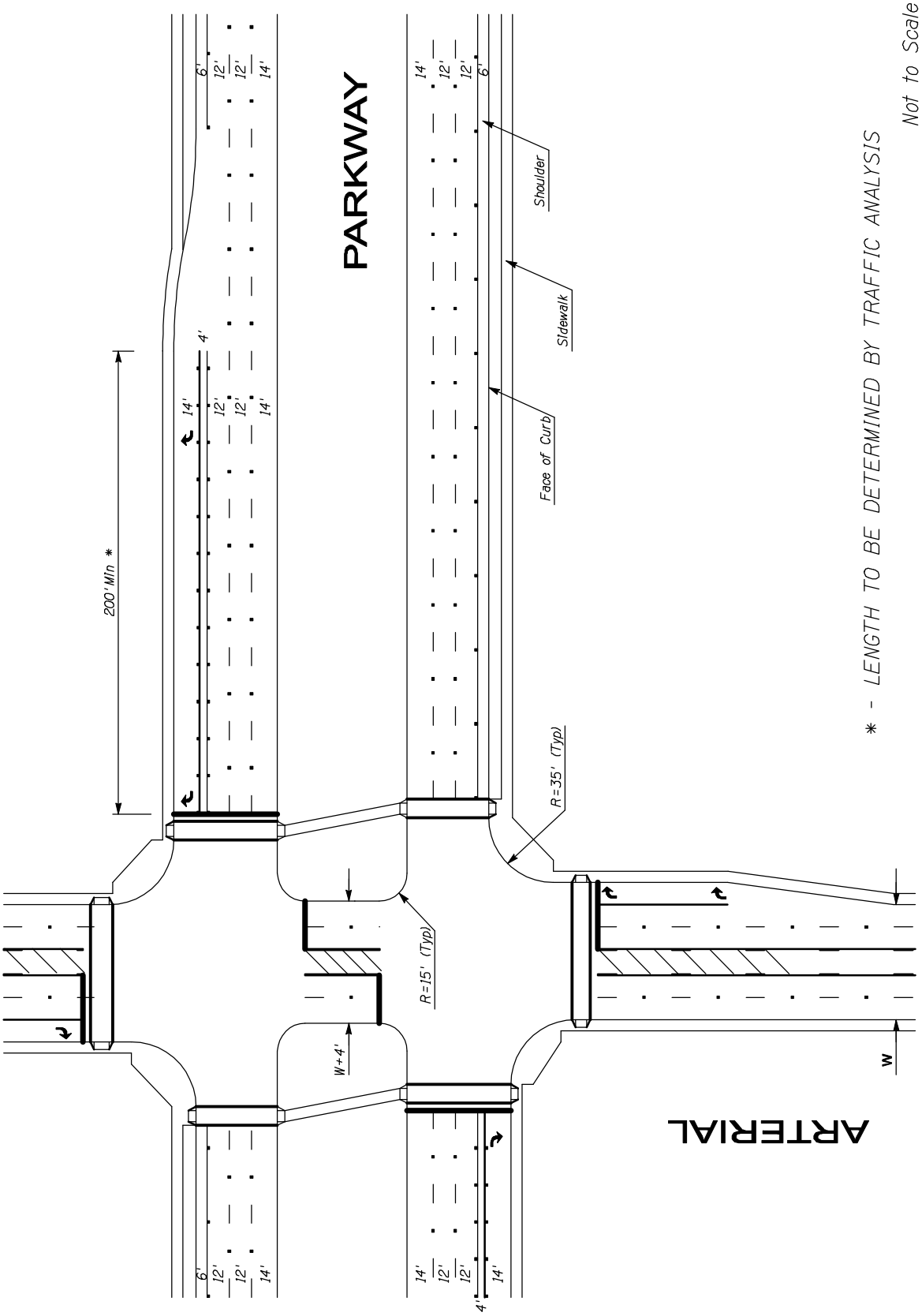

FIGURE 6 - GEOMETRICS FOR TYPICAL PARKWAY / ARTERIAL INTERSECTION

SURVEY NO. FINISHED PLANS- REVISIONS- LOCATION- DATE- SURVEY NO. FINISHED PLANS- REVISIONS- LOCATION- DATE-
DESIGN FILE: n:\60040833\Prod\civ\RepGm04.dgn

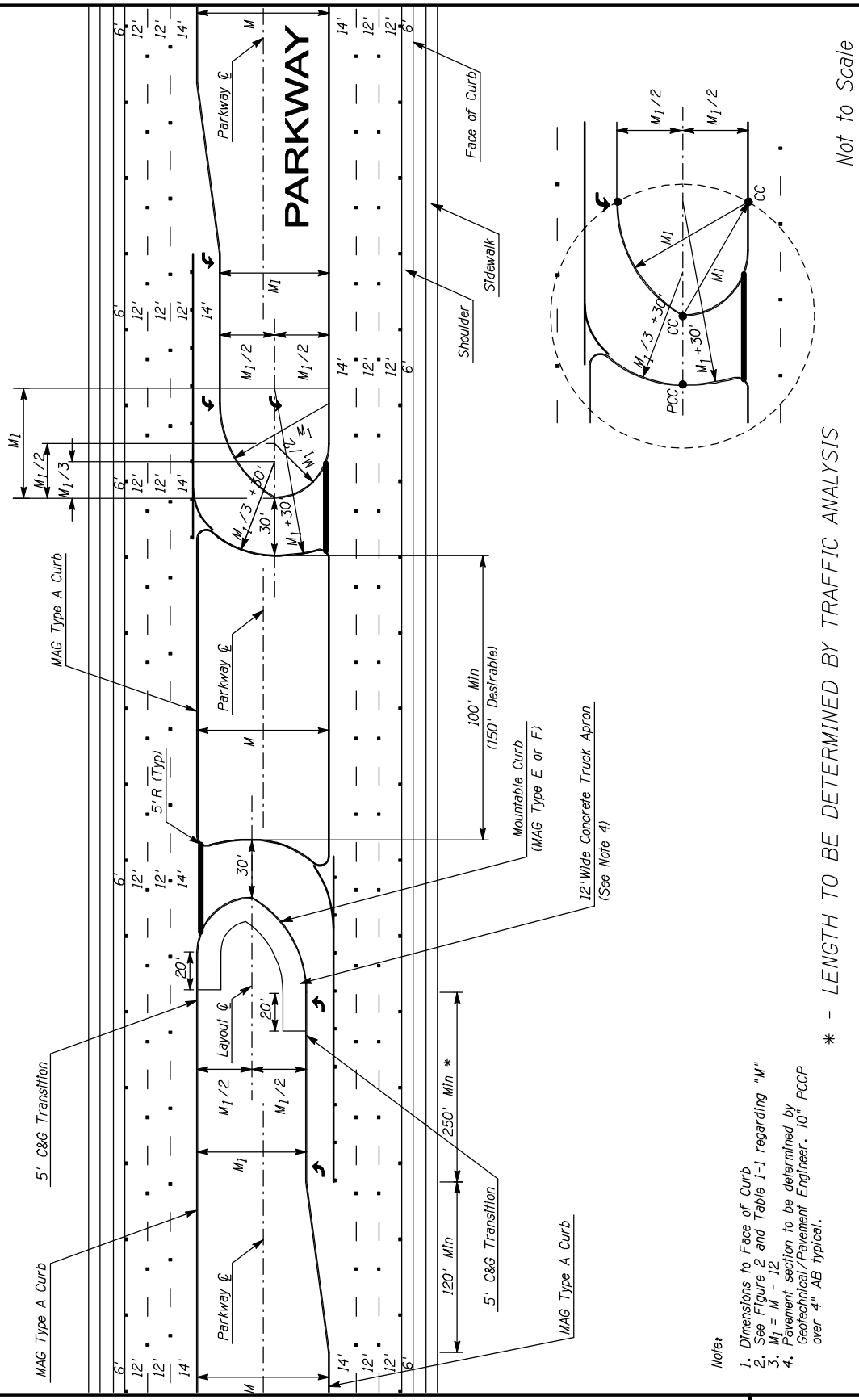

Notes:

1. Dimensions to Face of Curb
2. See Figure 2 and Table 1-1 regarding "M"
3. $M_1 = M - 12$
4. Pavement section to be determined by Geotechnical/Pavement Engineer. 10" PCCP over 4" AB typical.

FIGURE 7 - GEOMETRICS FOR TYPICAL URBAN SINGLE-LANE DIRECTIONAL CROSSOVER

SURVEY NO. FINISHED PLANS- REVISIONS- LOCATION- DATE- SURVEY NO. FINISHED PLANS- REVISIONS- LOCATION- DATE-
DESIGN FILE: n:\60040833\Prod\civ\RepGm05.dgn

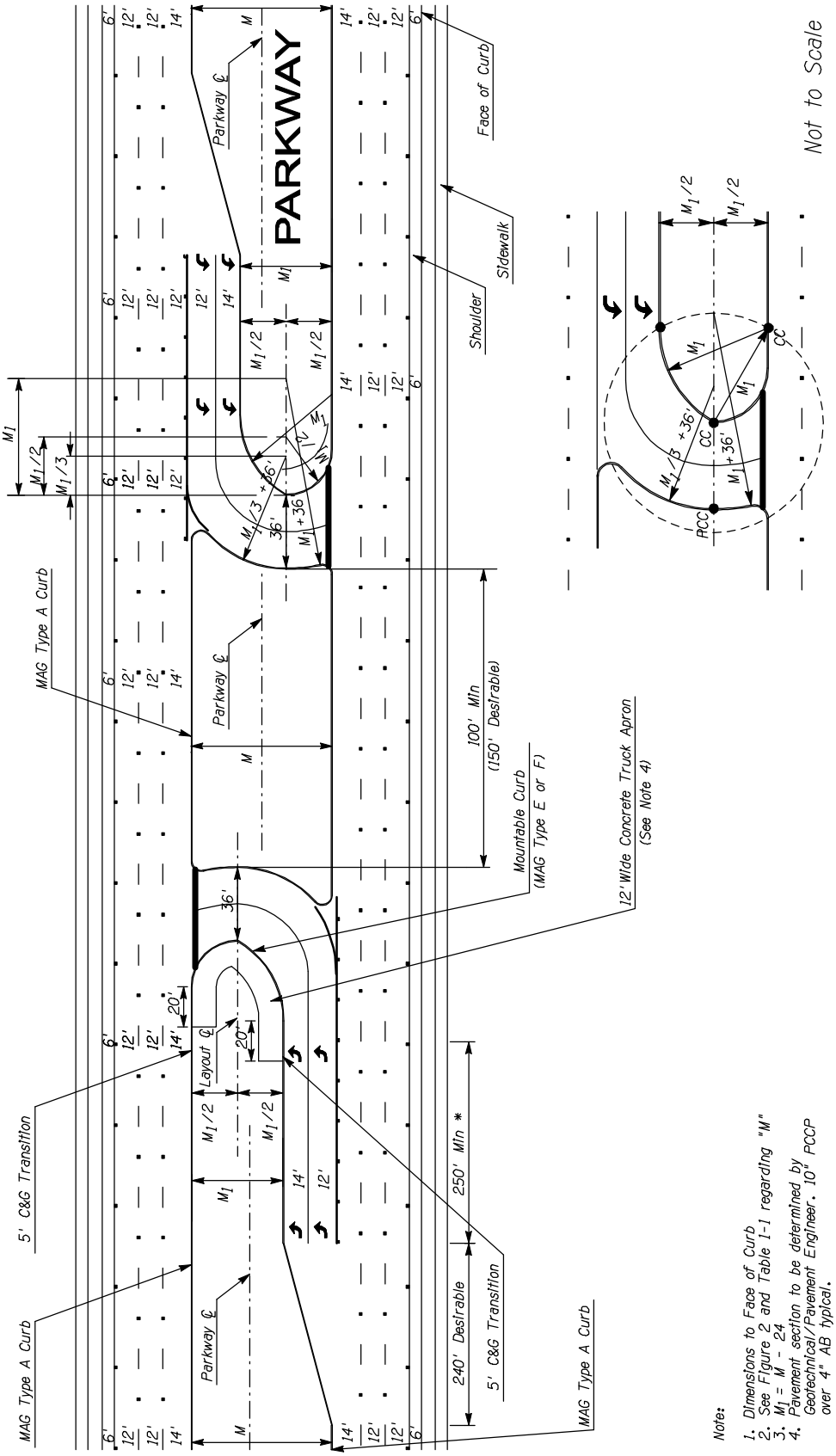

Note:

1. Dimensions to Face of Curb
2. See Figure 2 and Table 1-1 regarding "M"
3. $M_1 = M - 24$
4. Pavement section to be determined by Geotechnical/Pavement Engineer. 10" PCCP over 4" AB typical.

FIGURE 8 - GEOMETRICS FOR TYPICAL URBAN DUAL-LANE DIRECTIONAL CROSSOVER

SURVEY NO. FINISHED PLANS- REVISIONS- LOCATION- DATE- SURVEY NO. FINISHED PLANS- REVISIONS- LOCATION- DATE-
DESIGN FILE: n:\60040833\Prod\civ\RepGm07.dgn

SURVEY NO.	FINISHED PLANS-	REVISIONS-	LOCATION-	DATE-	SURVEY NO.	FINISHED PLANS-	REVISIONS-	LOCATION-	DATE-

FIGURE 9 - GEOMETRICS FOR TYPICAL RURAL SINGLE-LANE DIRECTIONAL CROSSOVER

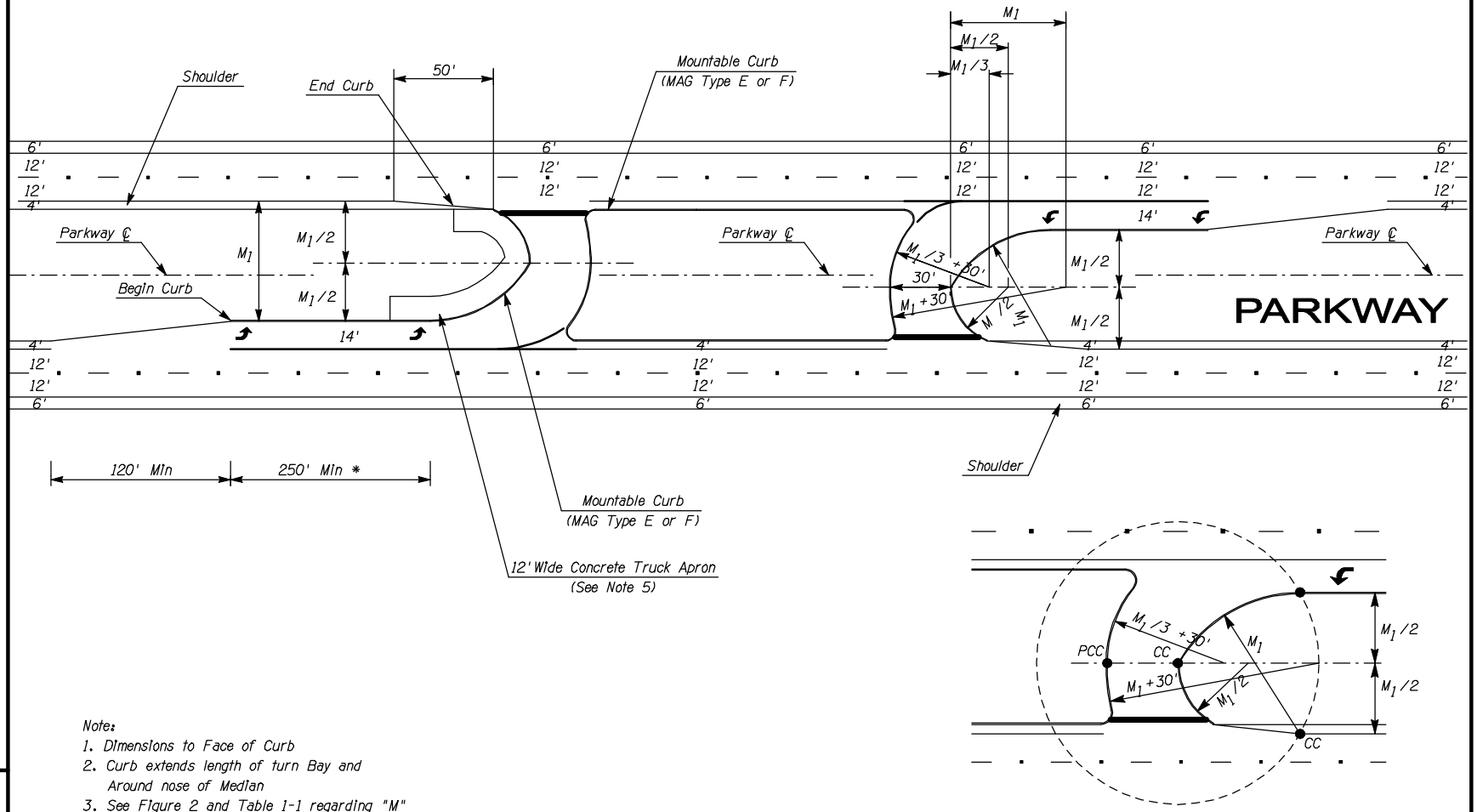

Note:
1. Dimensions to Face of Curb
2. Curb extends length of turn Bay and Around nose of Median
3. See Figure 2 and Table 1-1 regarding "M"
4. $M_1 = M - 10$
5. Pavement section to be determined by Geotechnical/Pavement Engineer. 10" PCCP over 4" AB typical.

* - LENGTH TO BE DETERMINED BY TRAFFIC ANALYSIS

Not to Scale

DESIGN FILE: n:\60840833\Proc\civ\Rep6m08.dgn

SECTION 6 – MULTIMODAL ACCOMMODATIONS

In 1999, the USDOT developed a Policy Statement in response to Section 1202(b) of the Transportation Equity Act (TEA-21) which states bicycle and pedestrian ways shall be established in new construction and reconstruction projects in urban areas unless: bicyclists and pedestrians are prohibited by law; the cost would be excessively disproportionate to the probable use; or where sparse populations indicate an absence of need.

Accommodations for Pedestrians and Bicycles

In both urban and rural conditions, a shoulder is recommended which can accommodate bicycles. In urban areas, a 6' (minimum) sidewalk is recommended to accommodate pedestrians. Curb opening catch basins should be used rather than grated inlets due to the potential for bicycles adjacent to the gutter pan.

Accommodations for Buses

Bus stops should be located on the far-side of the intersection and should include a bus bay (see MAG Detail 252).

Accommodations for Light Rail Transit

The wide Parkway median provides room for the addition of bi-directional light rail transit (LRT) guideways. However, all guideway crossings would require signalization. Therefore, all crossovers would become signalized with the addition of LRT in the Parkway median.

SECTION 7 – TRAFFIC ELEMENTS

Signing

Signing is an important element of the Parkway facility in order to provide drivers with adequate guidance and to discourage wrong-way movements. At a full median break, regulatory signing should be provided to indicate the prohibition of left-turns at the intersection and to discourage wrong-way movements. As shown in Figure 10 (Typical Signing for Parkway/Arterial Intersections), numerous Wrong-Way, Do Not Enter, One-Way, and No Left Turn regulatory signs are recommended. In addition, guide signs ("fish-hook" signs) should be provided in the Parkway median and on the arterial approaches.

At directional crossovers, similar signing is recommended including regulatory signs and guide signs. However, the guide sign is slightly modified and two different versions are recommended depending on the location of the crossover. If the crossover is immediately downstream of an intersection, the guide sign should provide the name and cardinal direction of the Parkway facility and the adjacent arterial as shown in Figure 11 (Typical Signing for Single-Lane Stop Controlled Crossover). If the crossover is not immediately downstream of an intersection, the guide sign should only include the name and cardinal direction of the Parkway facility. Stop signs are recommended on the crossovers but can be replaced with Yield signs as long as the median is a minimum of 30' wide. As shown in Figure 12 (Typical Signing for Dual-Lane Stop Controlled Crossover), additional signage is recommended at dual-lane crossovers to provide guidance to large trucks regarding lane usage.

Signals

The relationship of signal cycle length, signal spacing, and progression speed is shown in Table 4. As shown below, fewer signals at a uniform spacing improve traffic flow. As traffic volumes increase, longer cycle lengths are used to minimize lost time. A signal spacing of one-half mile provides opportunities to achieve signal progression at speeds of 30 mph to 40 mph, depending on the cycle length.

Table 4
Progression Speed as a Function of Signal Spacing & Cycle Length

Cycle Length (sec)	Signal Spacing			
	⅛ mile (660 ft)	¼ mile (1320 ft)	⅓ mile (1760 ft)	½ mile (2640 ft)
	Progression Speed (mph)			
60	15	30	40	60
90	10	20	27	40
120	7.5	15	20	30

Source: Access Management Manual, TRB (2003)

The recommended full median opening spacing is one mile while the minimum spacing is one-half mile. All full median breaks will eventually be signalized once warrants are met. In addition, directional crossovers may be signalized if warrants are met. The signals should be operated on a two-phase cycle with one phase for the Parkway traffic and one phase for the cross-street traffic. With this simple signal phasing, longer green times are available for the through traffic. The intersections should be operated by one signal controller with an extended green time at the full median breaks. This extended green time is used to discourage vehicles

from getting “trapped” in the median by providing an additional 3-4 seconds of green time on the downstream signal. Figure 13 (Typical Signal Layouts) shows a generalized signal pole layout for an arterial intersection and a signalized crossover. At a signalized crossover, only one-half of the Parkway is signal controlled. These signals should also operate with two phases; one for the through/right-turn traffic and one for the u-turn traffic. If a driveway or side-street is located across from the crossover, it is recommended that a stop-sign be installed for the side-street/driveway approach movement rather than signal heads as shown in Figure 13. This configuration will reduce the conflict between the u-turn and right-turn movements.

Maricopa County and numerous valley agencies have made a substantial investment in ITS technology over the past decade. AZTech is the model deployment and regional management of an Intelligent Transportation System (ITS) developed for the Phoenix Metropolitan area. The AZTech system uses a number of traffic control and traffic information technologies collectively known as ITS. These computer and communication tools provide real-time information to traffic control centers about traffic flow changes and emergency incidents and enable these centers to adjust traffic signals and provide motorist information about roadway conditions via dynamic message signs. Parkways will become one of the key facilities in the future transportation network and will require connectivity to regional traffic operations centers. Therefore, relatively large-count, single-mode fiber optic cable should be installed to provide communications along the corridors. ITS components utilized on Parkways should be similar to those currently being implemented on major arterial corridors, including vehicle detection and closed-circuit television cameras at signalized intersections. Vehicle detection should also be provided between signals to allow for traffic data collection. Currently, the preferred signal interconnection strategy includes “hard-wiring” with fiber optic cable between the signals. This strategy should also be implemented on the Parkways.

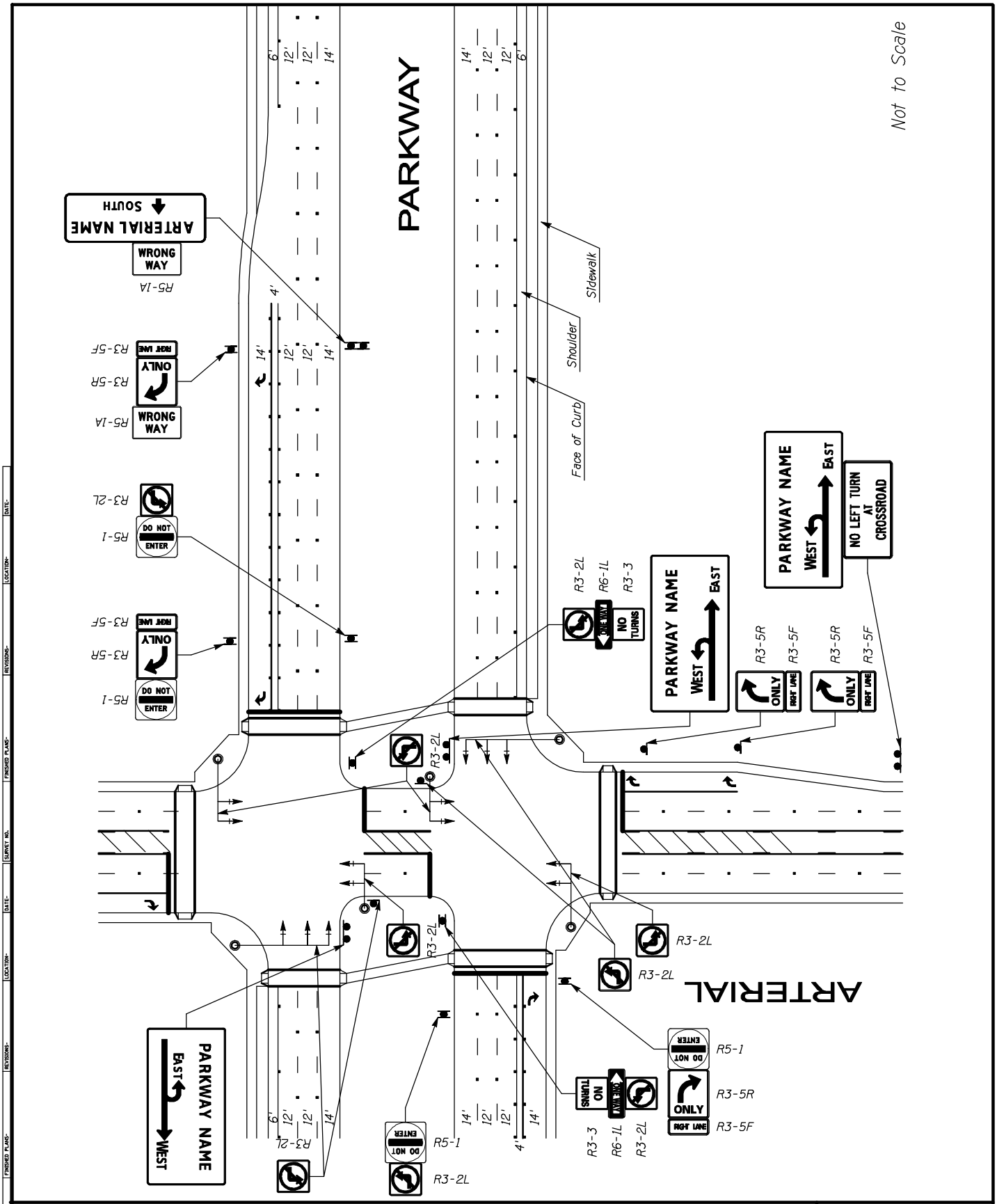

FIGURE 10 - TYPICAL SIGNING FOR PARKWAY / ARTERIAL INTERSECTION

DESIGN FILE: n:\60040833\Prod\civ\RepSp02.dgn

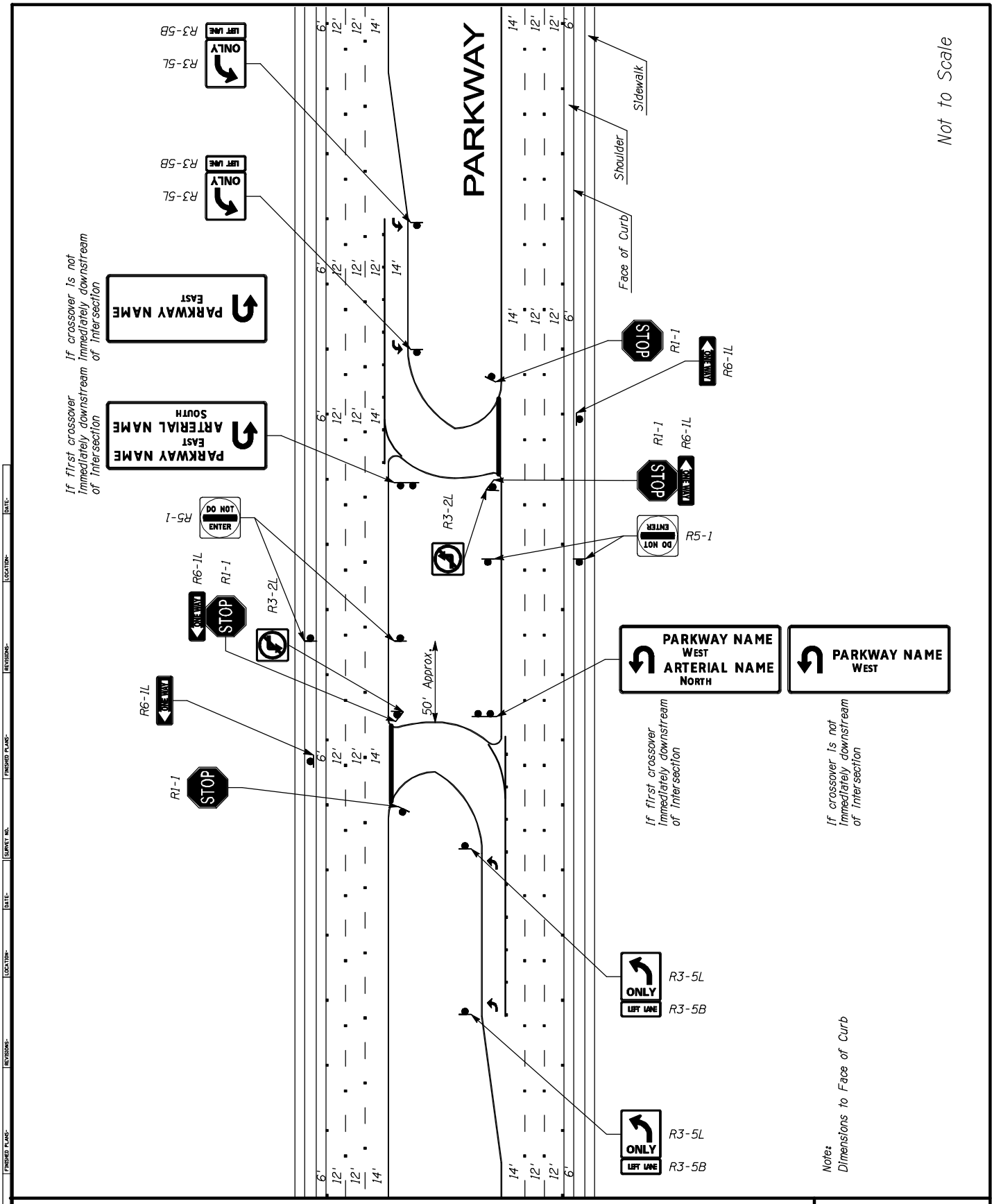

FIGURE 11 - TYPICAL SIGNING FOR SINGLE-LANE STOP CONTROLLED CROSSOVER

DESIGN FILE: n:\60040833\Prod\civ\RepSp03.dgn

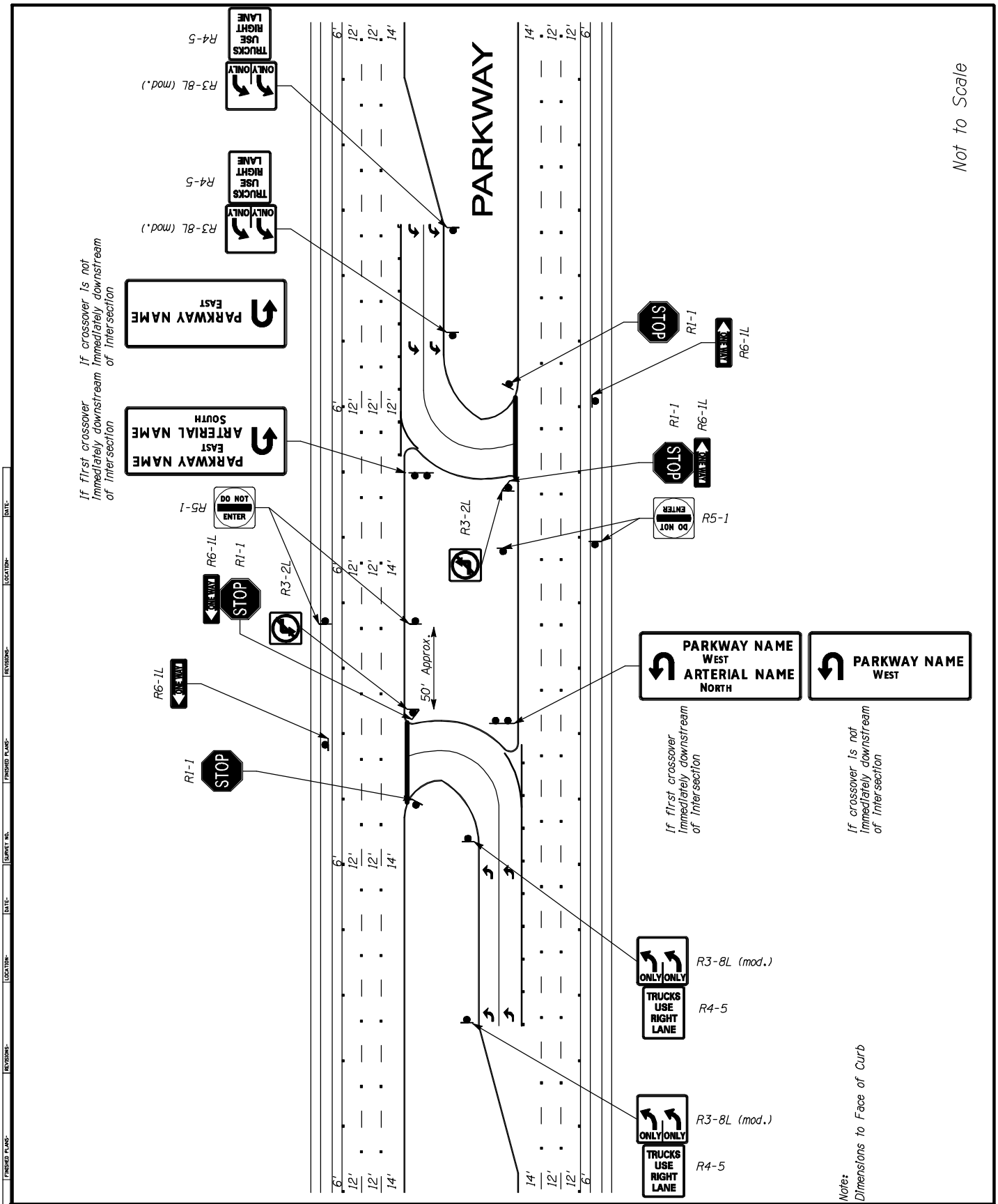

FIGURE 12 - TYPICAL SIGNING FOR DUAL-LANE STOP CONTROLLED CROSSOVER

DESIGN FILE: n:\60040833\Prod\civ\RepSp04.dgn

SURVEY NO.	FINISHED PLANS-	REVISIONS-	LOCATION-	DATE-	SURVEY NO.	FINISHED PLANS-	REVISIONS-	LOCATION-	DATE-

DESIGN FILE: n:\60140833\Proed\ev\RepSg01.dgn

FIGURE 13 - TYPICAL SIGNAL LAYOUTS

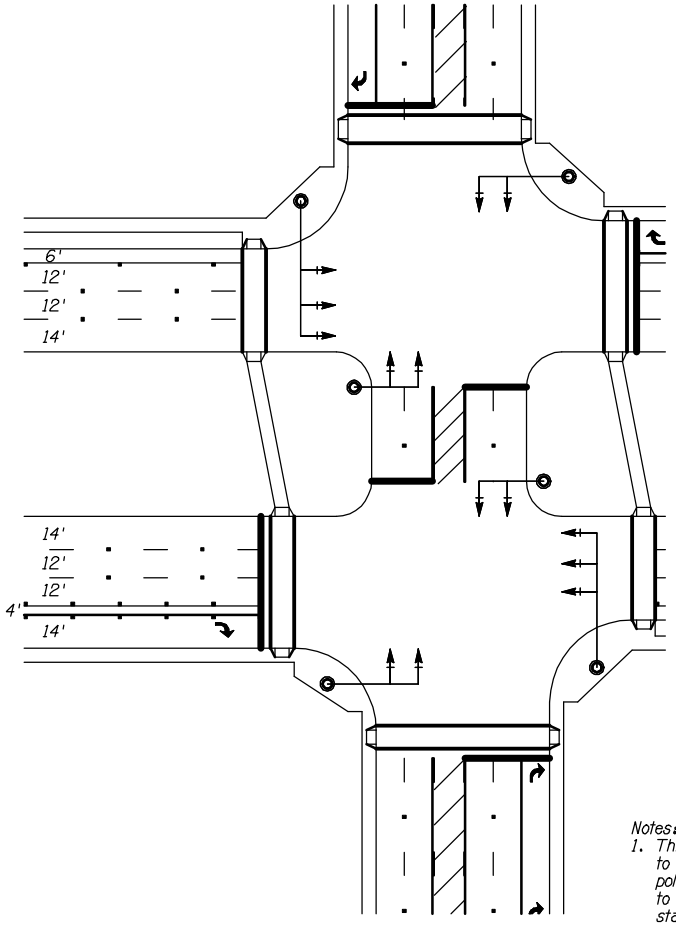

PARKWAY

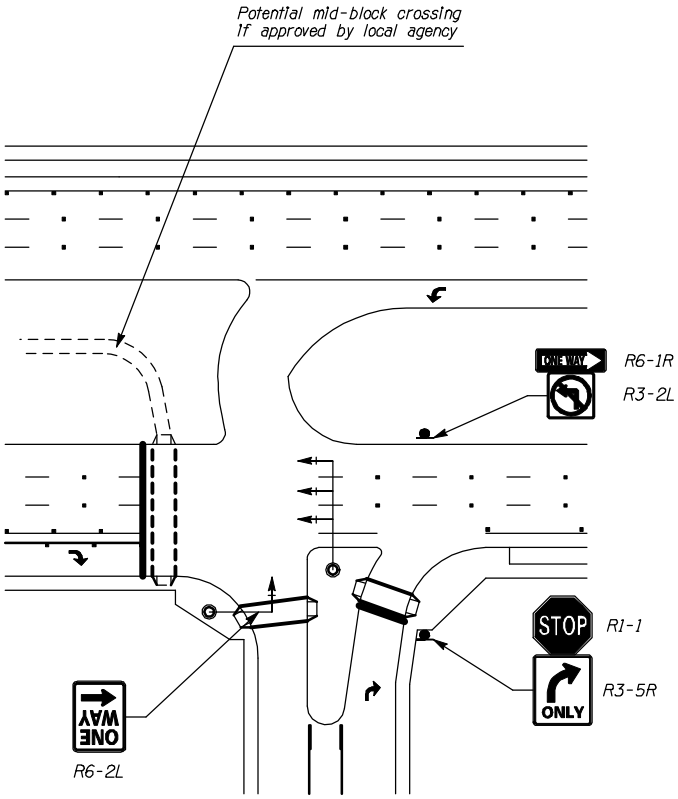

Notes:
1. This schematic is intended to depict the general signal pole layout and is not intended to provide all signal design standards. Consult local agency policies and standards for additional information.

2. See Figure 10 & 11 for additional sign information.

4-LEGGED FULL MEDIAN OPENING

3-LEGGED ALIGNED WITH CROSSOVER

SECTION 8 – OTHER CONSIDERATIONS

Facility Transitions

The Parkway facility is very similar to a principal arterial facility with a different intersection treatment. Therefore, no extraordinary conditions exist at a transition from a Parkway to an arterial. Standard engineering practice should be followed for these transitions.

When the raised median along a Parkway is terminated, it is recommended cross-hatching and raised pavement markers be used to delineate the paved area adjacent to the beginning of the raised median in order to discourage vehicles from entering this area. In addition, it is recommended driveways and side-streets be located at least 100' from this area in order to discourage vehicles from using the area to turn in or out of a driveway or side-street.

The roadway width should be tapered through the use of reverse curves. Using a 9964.48' curve radius (2% normal crown at 55 mph) would result in the following transition lengths (along a tangent centerline):

Offset (ft)	Transition Length (ft)
30	1093.09
40	1262.03
50	1410.81
80	1783.88
118	2165.48

Crossovers should not be located within a transition area that does not provide enough median width to accommodate u-turns. Crossover locations upstream and downstream of a transition should be evaluated to optimize the crossover spacing.

Median Grading

The median grading should account for several factors including drainage, utilities, potential future roadway widening, safety, erosion control, and maintenance. The median grading should provide recoverable side slopes within the clear zone and should not inhibit sight lines; provide accommodations for drainage and utilities (if necessary); provide flexibility for future roadway widening; not promote erosion or maintenance issues; and not promote the transfer of debris, soil or other materials from the median into the roadway. Utilities may be located in the median, but they should not obstruct sight lines, hinder drainage facilities nor require relocation as a result of future roadway widening into the median. Landscaping in the median should not inhibit sight lines and should conform to AASHTO guidance regarding clear-zone requirements.

Drainage

The drainage design criteria for a principal arterial roadway should be used for on-site roadway pavement drainage and for off-site cross-drainage. Curb opening catch basins should be used rather than grated inlets due to the potential for bicycles adjacent to the gutter pan. Stormwater retention/detention in the "ultimate" (50') median can be problematic given the maximum side slopes, minimum catch basin depths, and minimum pipe slopes. With a wider median, retention/detention in the median becomes more feasible. However, the future (potential 8-lane) conditions must be considered in the initial design.

Grade Separated Crossings

The wide median associated with the Parkway facility would result in a very wide structure when an overpass (Parkway going over) is required or a very long structure when an underpass (Parkway going under) is required. Therefore, it is recommended one of the two following options be used at an overpass: (1) two separate overpass structures; or (2) the median width be reduced. Both of these options result in the full median width not being carried across an overpass. The full lane widths and shoulder widths should be carried across the structure along with the sidewalk. There are numerous options for an underpass, including separate bridges over each direction of the Parkway or single multi-span bridge over the Parkway. The recommended option for an underpass is a single two-span bridge with a reduced median width to shorten the structure length.

SECTION 9 – PHASING

The construction of many roadway facilities involves phased implementation. The standard urban typical section shown in Figure 2 (Parkway Typical Sections) includes three travel lanes in each direction. The first phase may include only two lanes in each direction with the third lane, or future fourth lane, being added as warranted by traffic volumes. In addition, the roadway section may be implemented in phases with each half of the roadway being constructed at different times. This type of phasing typically results from half-street right-of-way dedications and roadway construction by an adjacent development.

Full-Width Phased Implementation

The typical sections shown in Figure 14 (Phased Urban Typical Sections) allow for the phased implementation of a full-width typical section. In some specific situations, the four-lane section could be implemented first. If a four-lane urban section is constructed, the crossovers should be designed and constructed in the location required for a six-lane section so the third lane can be added in the median and the crossover will not require reconstruction as shown in Figure 15 (Interim Urban Directional Crossover). With a four-lane section, the stop bar in the median crossover should be located approximately 12' behind the median curb as shown in Figure 15. With a four-lane section, this stop bar location improves sight-lines when compared to placing the stop bar near the median curb.

As warranted by traffic demands, the third lane in each direction would be added into the median. The six-lane typical section also allows for the future addition of a fourth travel lane into the median. The outside curb line can be constructed in its ultimate location with the first phase of implementation and will not require reconstruction due to the future addition of travel lanes. In addition, the lane lines of the rural typical section shown in Figure 2 (Parkway Typical Sections) align with the lane lines of the urban typical section in order to facilitate transitions between facility types.

Half-Street Phased Implementation

Ideally, the full right-of-way width would be obtained and the full typical section built with the initial construction. However, in many cases, the right-of-way is dedicated by an adjacent development, and therefore, only one-half of the eventual full right-of-way width is available for the initial construction. In this situation, the half-street should be constructed and operated as a traditional arterial roadway allowing left-turns at intersections. Following is a general description of phased implementation of a half-street:

- Build outside curb and gutter in its ultimate location and construct three travel lanes and appropriate shoulders;
- Operate with one lane in each direction of travel and with a striped median lane (continuous two-way left-turn lane);
- Allow left-turns at intersections similar to a traditional street;
- Do not build crossovers until the development patterns (and accompanying access locations) on both sides of the roadway have been established in order to optimize the crossover locations.

The minimum half-street width is approximately 44' which corresponds to one-half of the six-lane urban section and will accommodate three travel lanes in the interim condition. This initial half-street configuration could remain in place until travel demands warrant improvement or the

other half-street right-of-way is dedicated. Many options are available for the width of the initial construction and the resulting construction required in the second phase. In many cases, half-street implementation will result in “scalloped” streets – half-streets constructed on opposite sides of the centerline. This will be similar to a typical arterial “scalloped” street, except the offset between the half-streets is much greater and the resulting transitions will be longer (see Section 8 – Other Considerations for additional information on transitions).

It is recommended crossover locations not be determined during the initial phase, but rather with the later phase in order to ensure crossover locations are correctly placed based on the adjacent development on both sides of the roadway and not prematurely determined in the first phase.

Structures

In an underpass situation (Parkway going under), the bridge structure abutments and piers should be located so as not to inhibit the ultimate eight-lane facility. In an urban overpass situation (Parkway going over), an interim bridge should not be constructed which correlates to the urban four-lane section. Instead, the minimum phased bridge construction should be based on the urban six-lane section. In a half-street phased implementation, the minimum initial bridge width should accommodate three travel lanes and shoulders. In all cases, structures should be sized and located to facilitate (at a minimum not preclude) the ultimate eight-lane Parkway.

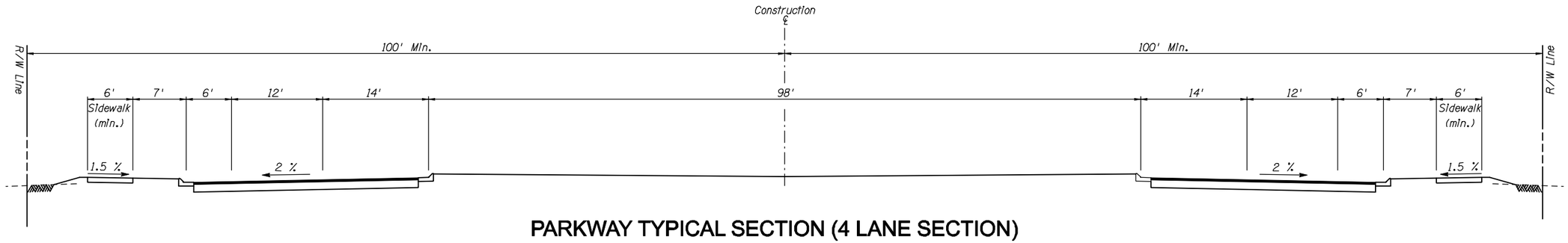

PARKWAY TYPICAL SECTION (4 LANE SECTION)

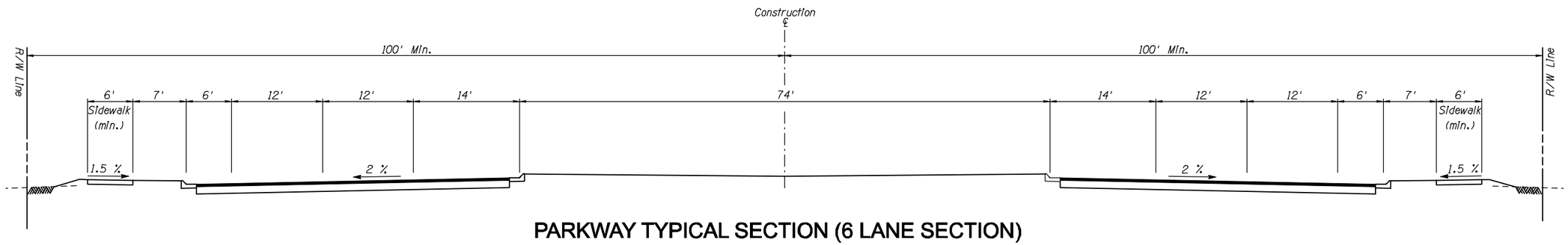

PARKWAY TYPICAL SECTION (6 LANE SECTION)

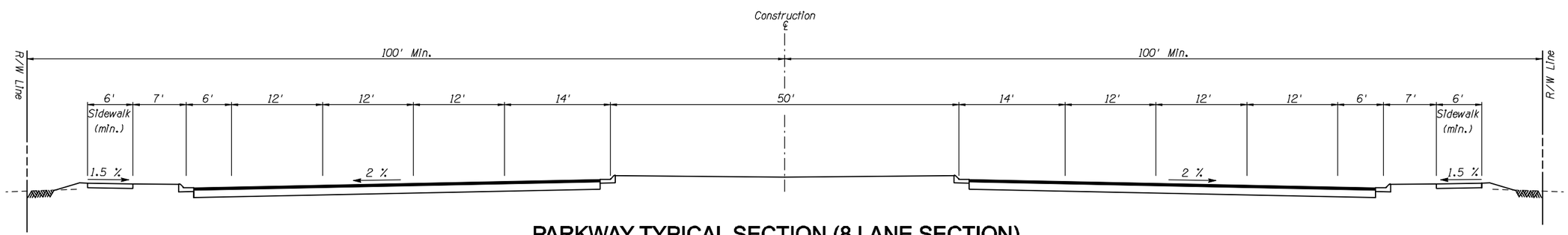

PARKWAY TYPICAL SECTION (8 LANE SECTION)

Note:
When curb is present, dimensions are to face of curb

Not to Scale

FIGURE 14 - PHASED URBAN TYPICAL SECTIONS

DESIGN FILE: n:\60040833\Prod\civ\RepTyp02.dgn

SURVEY NO.	FINISHED PLANS-	REVISIONS-	LOCATION-	DATE-	SURVEY NO.	FINISHED PLANS-	REVISIONS-	LOCATION-	DATE-

FIGURE 15 - INTERIM URBAN DIRECTIONAL CROSSOVER

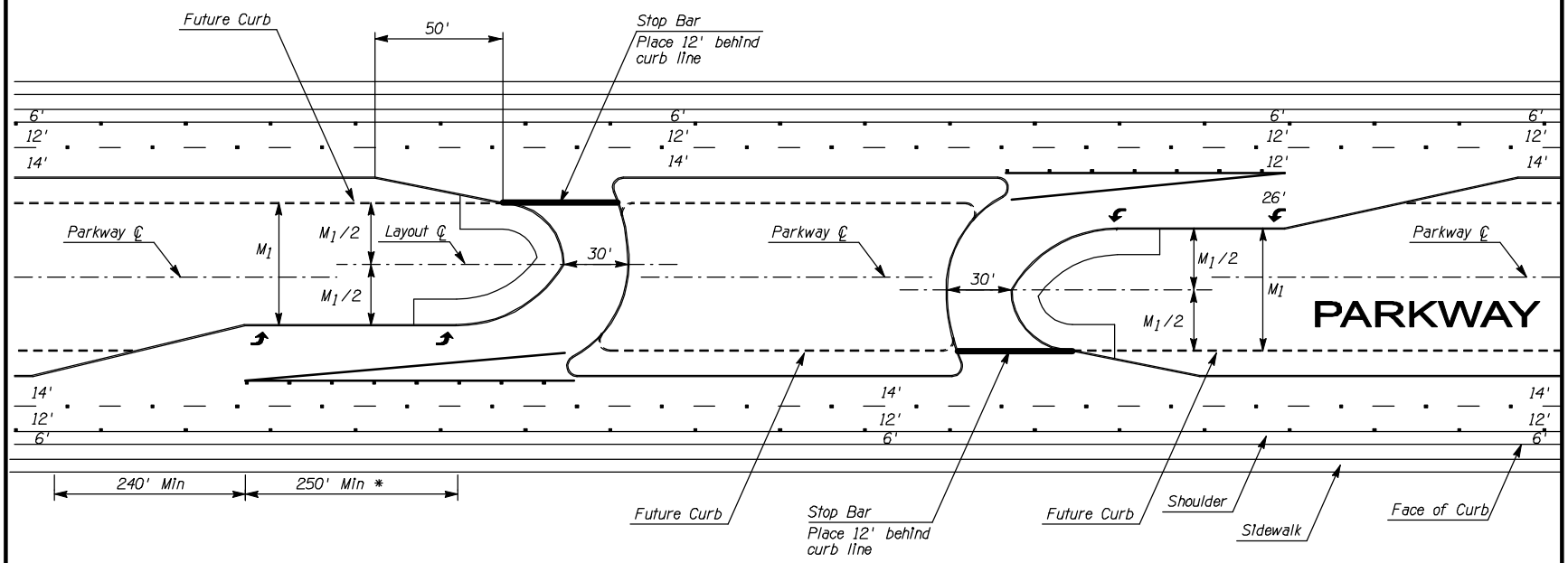

Note:
Dimensions to Face of Curb

* - LENGTH TO BE DETERMINED BY TRAFFIC ANALYSIS

Not to Scale

DESIGN FILE: n:\60848833\Proc\civ\Rep6m06.dgn

SECTION 10 – TYPICAL INTERSECTION CONFIGURATIONS

This section will describe the typical intersection configurations for three different at-grade intersections: collector/parkway; arterial/parkway; and parkway/parkway.

Collector Intersections

A majority of collector/parkway intersections will allow right-in/right-out movements only. A typical three-legged collector intersection will include one approach lane to the Parkway and one departure lane from the Parkway. All traffic approaching the Parkway will be required to execute a right-turn onto the Parkway. Drivers desiring to travel in the opposite direction will continue downstream to the next directional crossover and execute a u-turn. Standard signal warrants should be used to determine when a crossover should be signalized.

In some cases, a directional crossover can be aligned with a side-street in order to facilitate left-turns from the Parkway to the side-street. However, this configuration is undesirable since it creates additional conflicts between the u-turn traffic and the right-turn traffic. If a signal is installed, consideration should be given to only installing signal heads for the u-turn/left-turn movement and the through/right-turn movement on the Parkway. In this case, the side-street approach would be channelized and remain stop-controlled with the signal operating as a two-phase cycle, thus giving priority to the Parkway traffic and forcing all cross-street approach traffic to stop at a stop sign.

With a three-legged intersection, a crosswalk should only be installed when a signal is present. The crosswalk will only allow pedestrians to cross one-half of the Parkway and should only be installed when the remaining one-half of the Parkway can be crossed at an adjacent signalized intersection in close proximity, desirably less than 200'. In general, most three-legged intersections should not include pedestrian crossings. Pedestrian crossings between full median breaks need to be evaluated on a case-by-case basis.

A four-legged collector intersection can also be operated in a similar manner as described above without a full median break. Both approaches from the side-street would be required to turn right. A full median break should only be considered in the cases where a large volume of through traffic is anticipated on the side-street. In this case, a full median break can be provided as long as the one-half mile minimum spacing requirement is satisfied (see Section 4 – Access Management). Figure 16 (Typical Collector Intersections) shows typical collector/parkway intersections.

Arterial Intersections

A majority of the arterial intersections will include a full median break and will be signalized, when warrants are met, providing the signal spacing requirements of Section 4 (Access Management) are met. Left-turns will not be allowed in any direction. The arterial approaches should include advance signing for motorists approaching the Parkway facility. In addition, if a striped median exists, striped cross-hatching should be included near the Parkway intersection to indicate drivers should not utilize the striped median. Within the Parkway median, the arterial median should be striped and include cross-hatching. Figure 17 (Typical Arterial Intersections) shows a typical arterial/parkway intersection with a five-lane arterial approach roadway. Other approach widths, including seven lanes with or without a raised median, would follow a similar pattern.

SURVEY NO.	FINISHED PLANS-	REVISIONS-	LOCATION-	DATE-	SURVEY NO.	FINISHED PLANS-	REVISIONS-	LOCATION-	DATE-

FIGURE 16 - TYPICAL COLLECTOR INTERSECTION

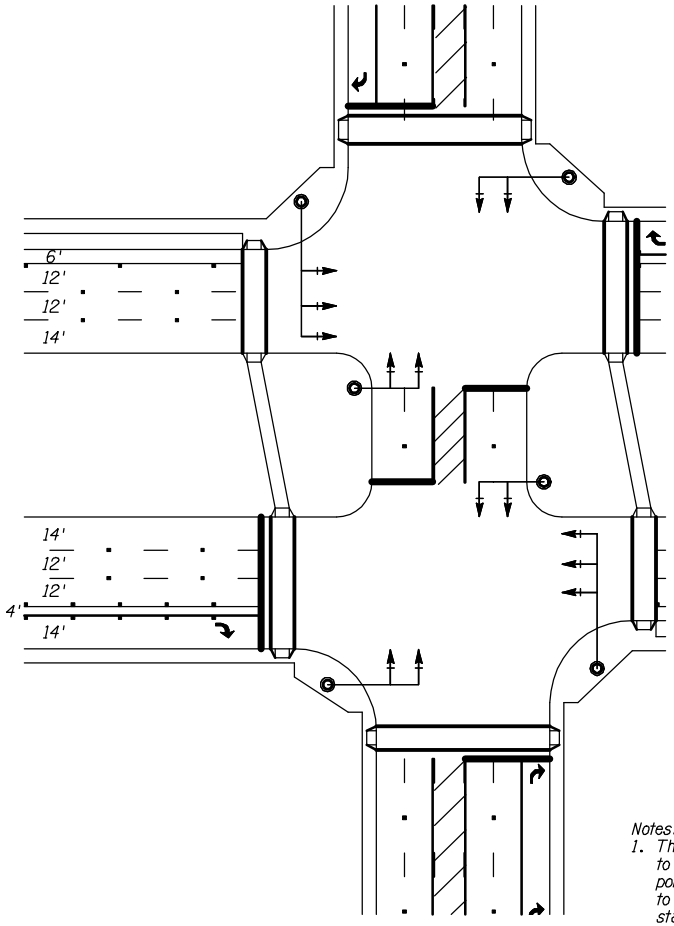

PARKWAY

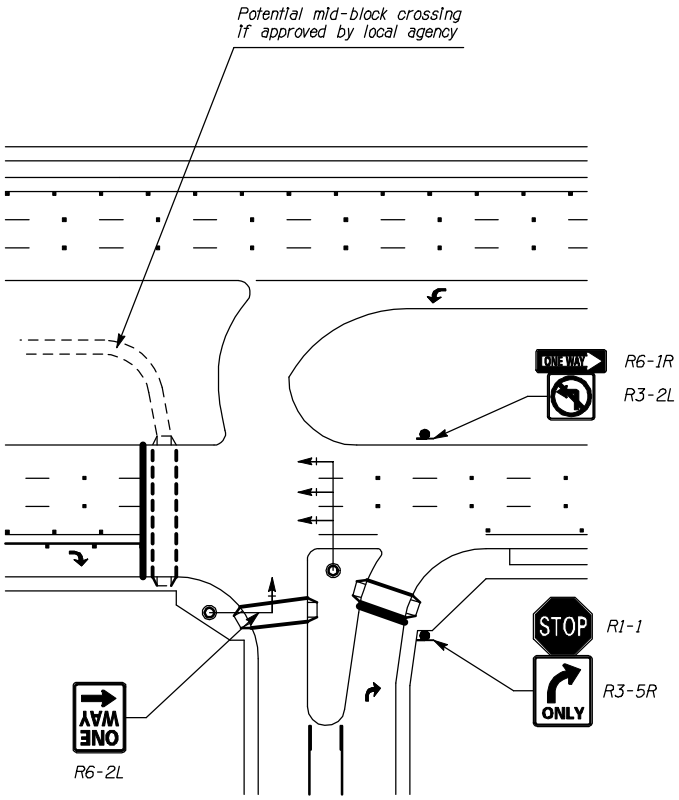

Notes:
1. This schematic is intended to depict the general signal pole layout and is not intended to provide all signal design standards. Consult local agency policies and standards for additional information.
2. See Figure 10 & 11 for additional sign information.

4-LEGGED FULL MEDIAN OPENING

3-LEGGED ALIGNED WITH CROSSOVER

Not to Scale

DESIGN FILE: n:\60840833\Proc\civ\Rep\n101.dgn

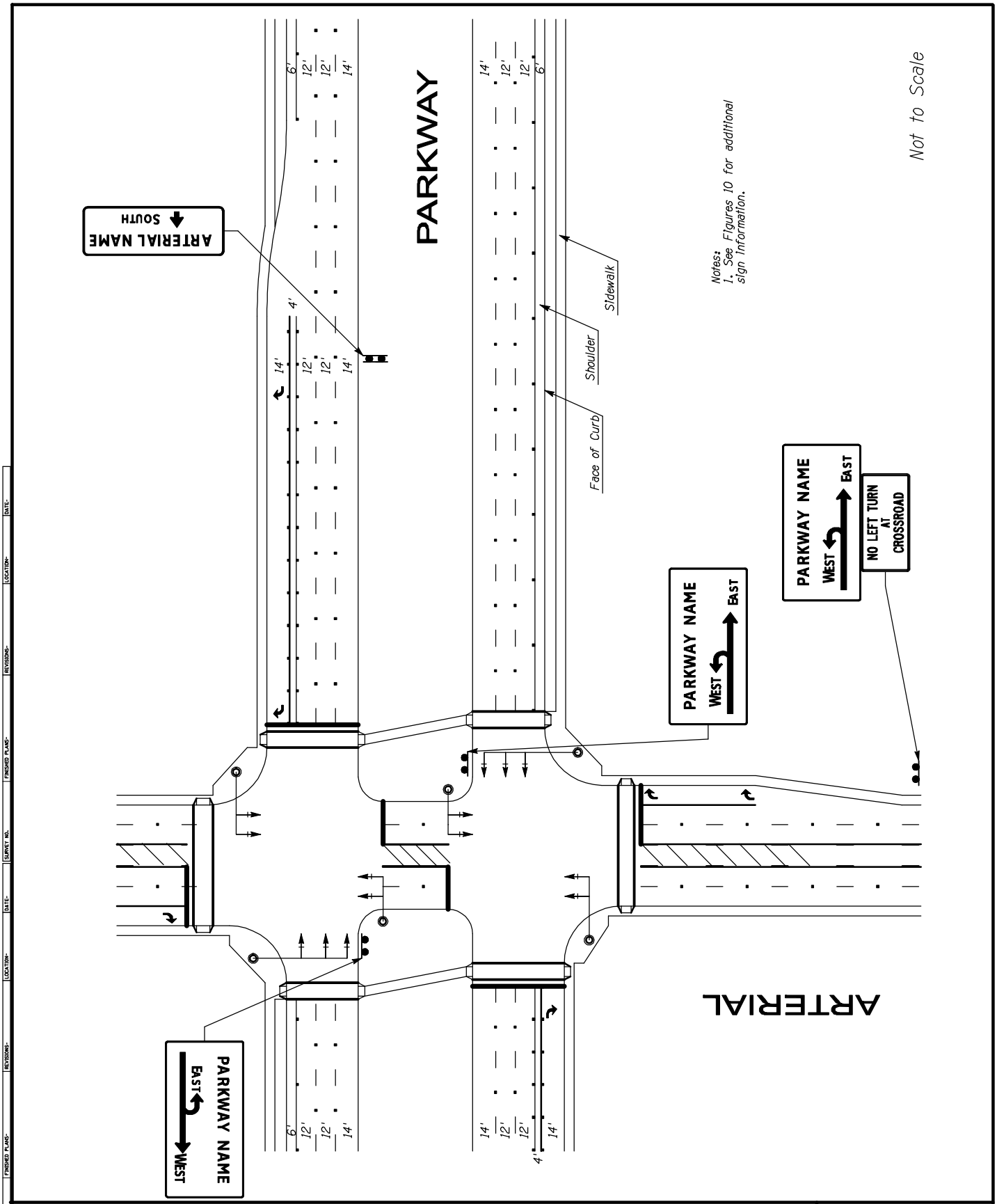

FIGURE 17 - TYPICAL ARTERIAL INTERSECTION

DESIGN FILE: n:\60040833\Prod\civ\RepInt02.dgn

Parkway Intersections

A parkway/parkway at-grade intersection will have a Parkway facility on all four legs of the intersection. Left-turns will not be allowed in any direction. Directional crossovers will be provided on each leg approximately 660' downstream of the intersection. Additional advance signing on the intersection approach is not needed since the driver has been traveling on a Parkway facility and should be aware of the indirect left-turn intersection treatments. At these intersections, the wide medians on the approaches will result in a raised median within the intersection. This median is suggested to provide channelization to the drivers and to provide separation between opposing traffic. Figure 18 (Typical Parkway Intersections) shows a typical parkway/parkway intersection with a six-lane Parkway approach roadway.

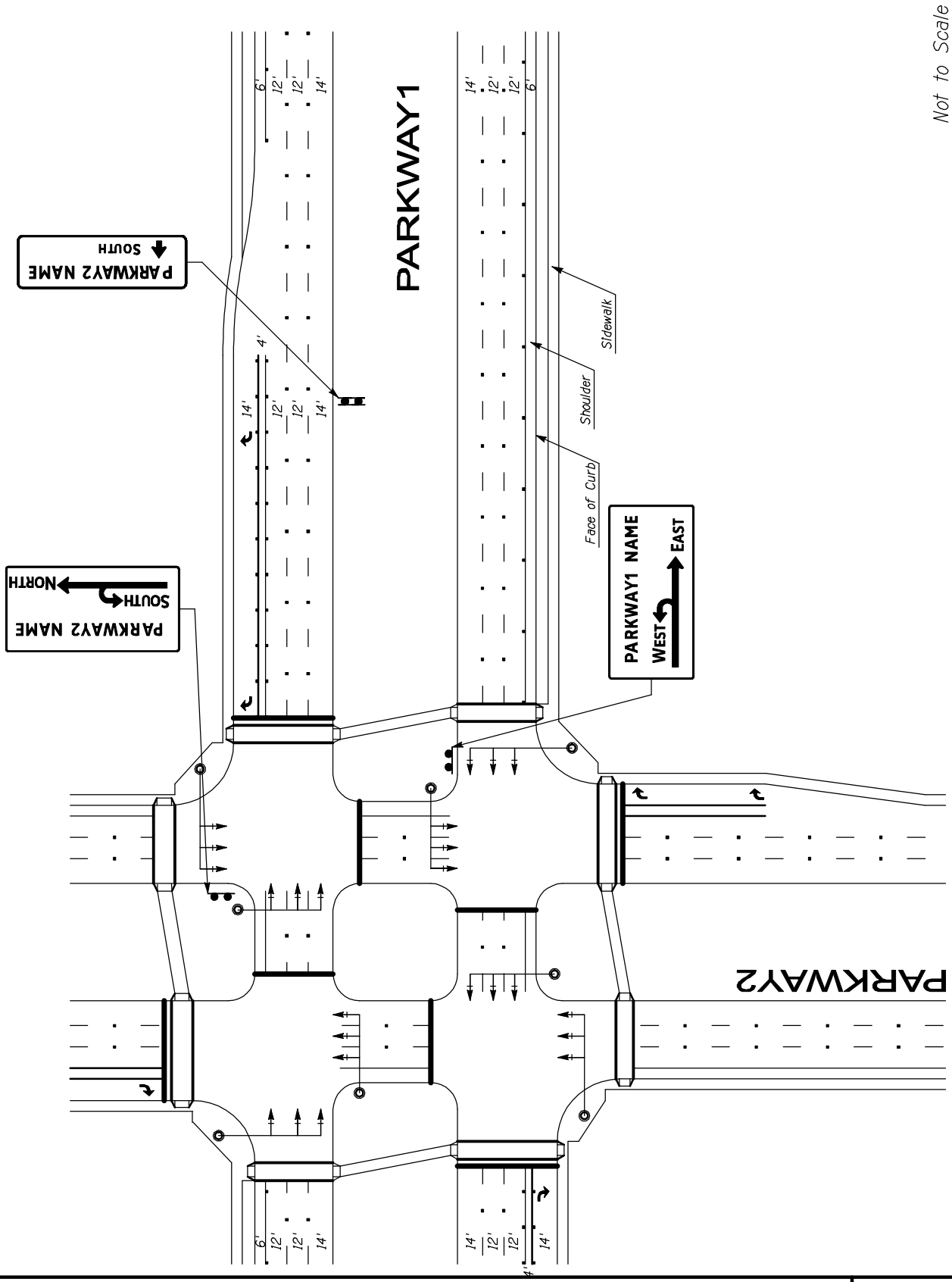

FIGURE 18 - TYPICAL PARKWAY INTERSECTION

DESIGN FILE: n:\60040833\Prod\civ\RepInt03.dgn

APPENDIX

Parkway Typical Sections (1 sheet)

Typical Geometric Layouts (4 sheets)

Typical Signing Plans (3 sheets)

Typical Striping Plans (3 sheets)

Interim Single-Lane Urban Crossover (1 sheet)

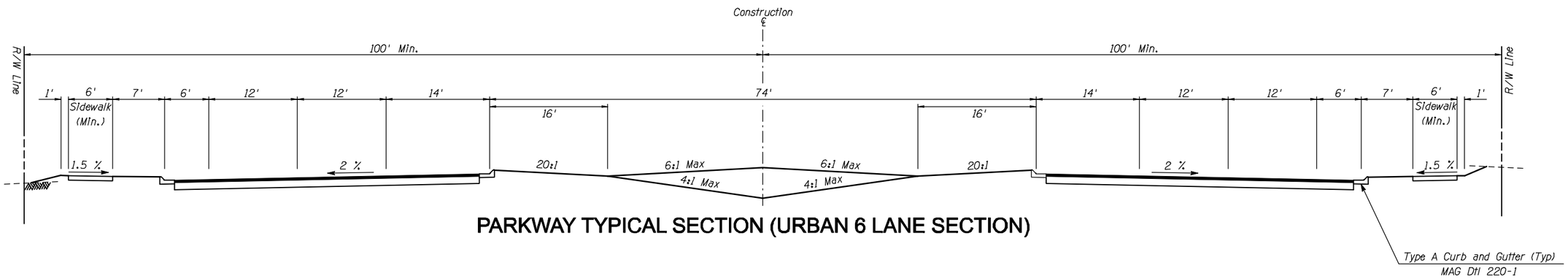

PARKWAY TYPICAL SECTION (URBAN 6 LANE SECTION)

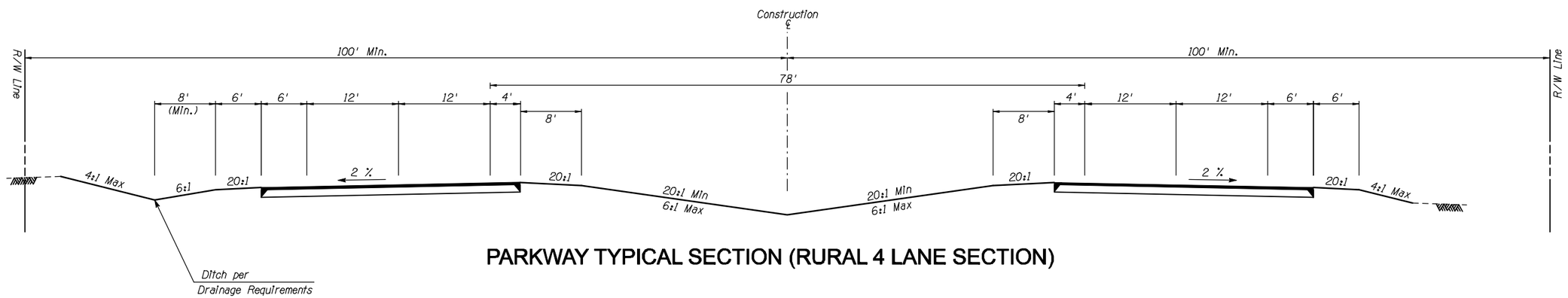

PARKWAY TYPICAL SECTION (RURAL 4 LANE SECTION)

Note:
When curb is present, dimensions are to face of curb

Not to Scale

PARKWAY TYPICAL SECTIONS

DATE: 08/08

SHEET NO: S-1

DESIGN FILE: n:\60040833\Prod\civ\AppenTyp01.dgn

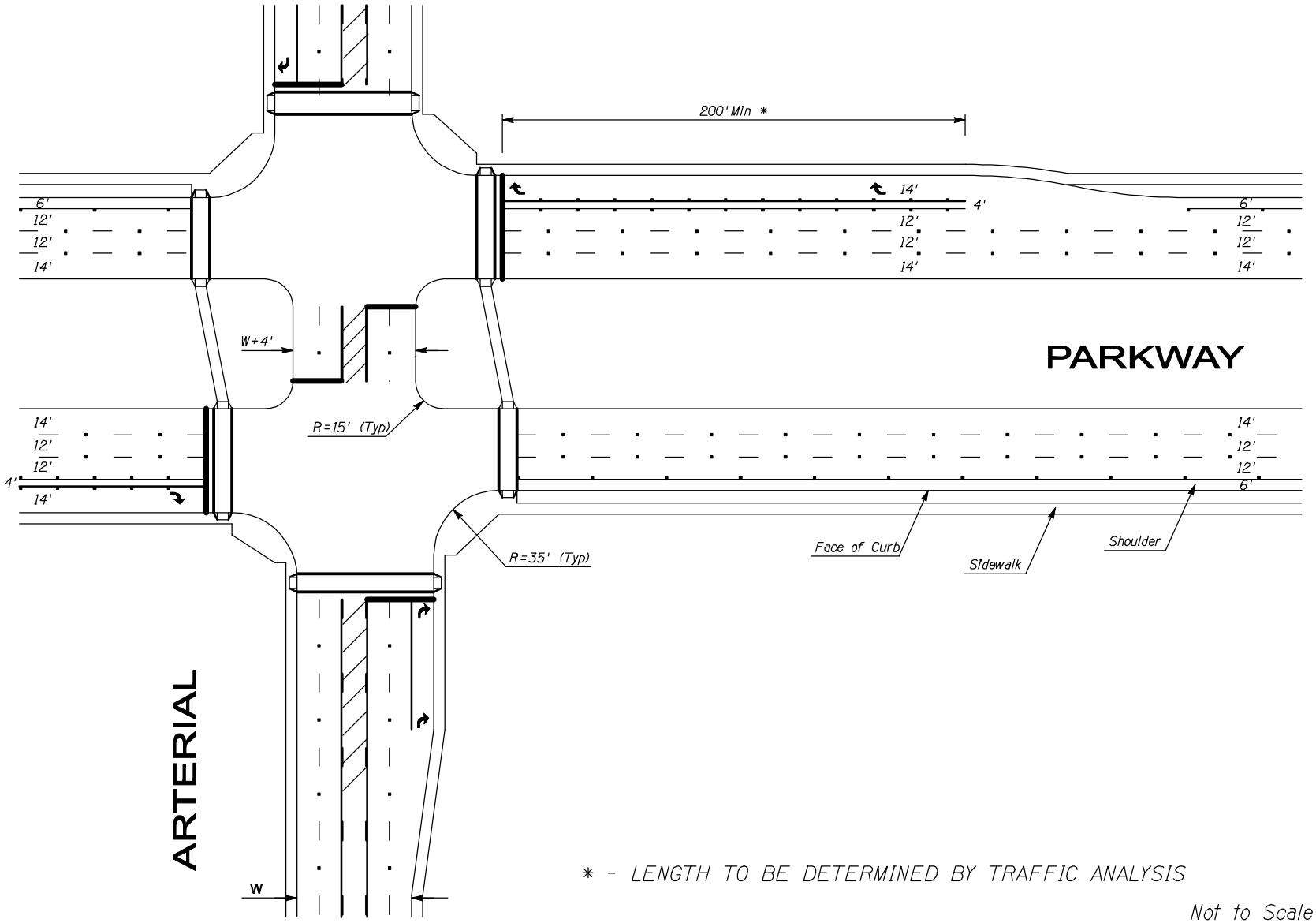

* - LENGTH TO BE DETERMINED BY TRAFFIC ANALYSIS

Not to Scale

GEOMETRICS FOR TYPICAL PARKWAY / ARTERIAL INTERSECTION

DATE: 08/08

SHEET NO: S-2

DESIGN FILE: n:\60040833\Prod\civ\AppenGm04.dgn

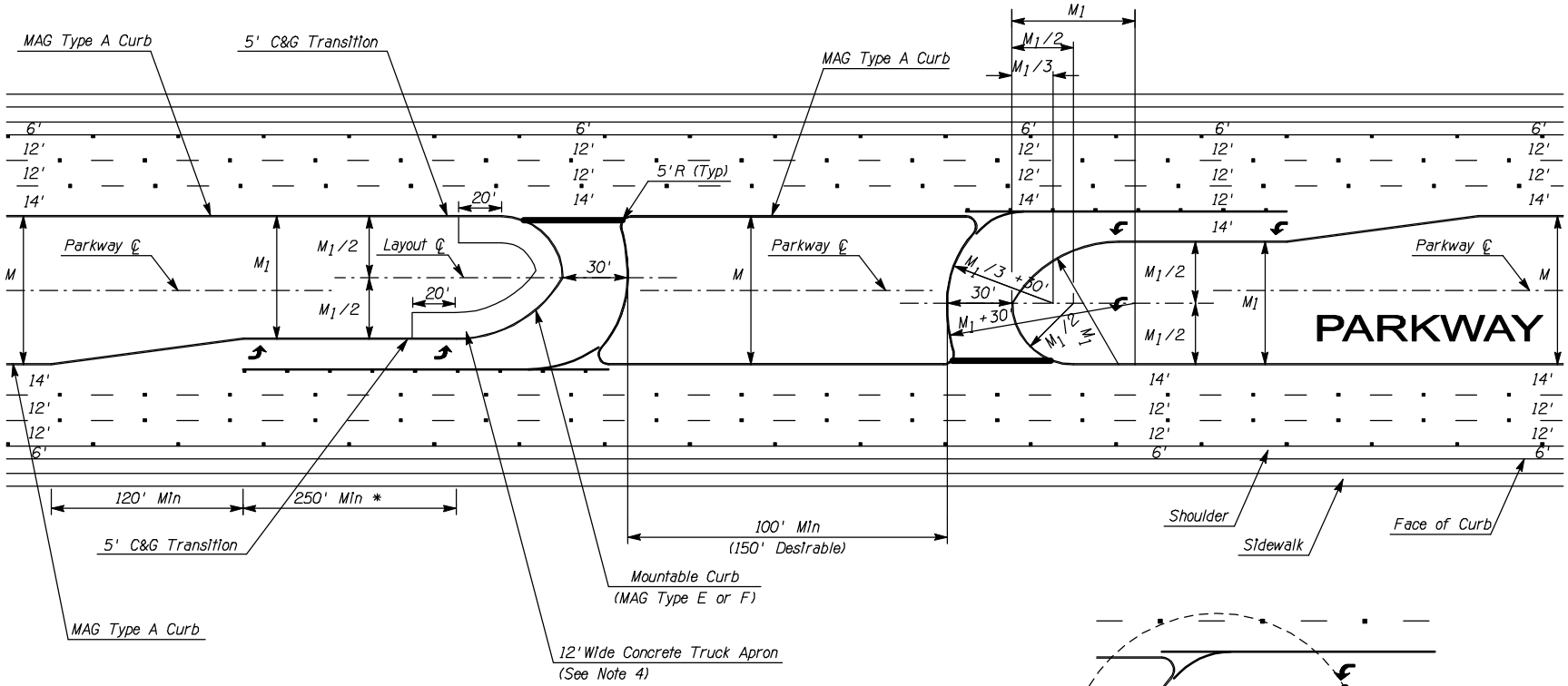

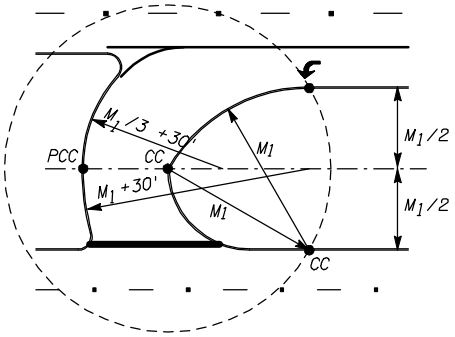

Note:

1. Dimensions to Face of Curb
2. See Figure 2 and Table 1-1 regarding "M"
3. $M_1 = M - 12$
4. Pavement section to be determined by Geotechnical/Pavement Engineer. 10" PCCP over 4" AB typical.

* - LENGTH TO BE DETERMINED BY TRAFFIC ANALYSIS

Not to Scale

GEOMETRICS FOR TYPICAL SINGLE-LANE DIRECTIONAL CROSSOVERS

DATE: 08/08

SHEET NO: S-3

DESIGN FILE: n:\60040833\Prod\civ\AppenGm05.dgn

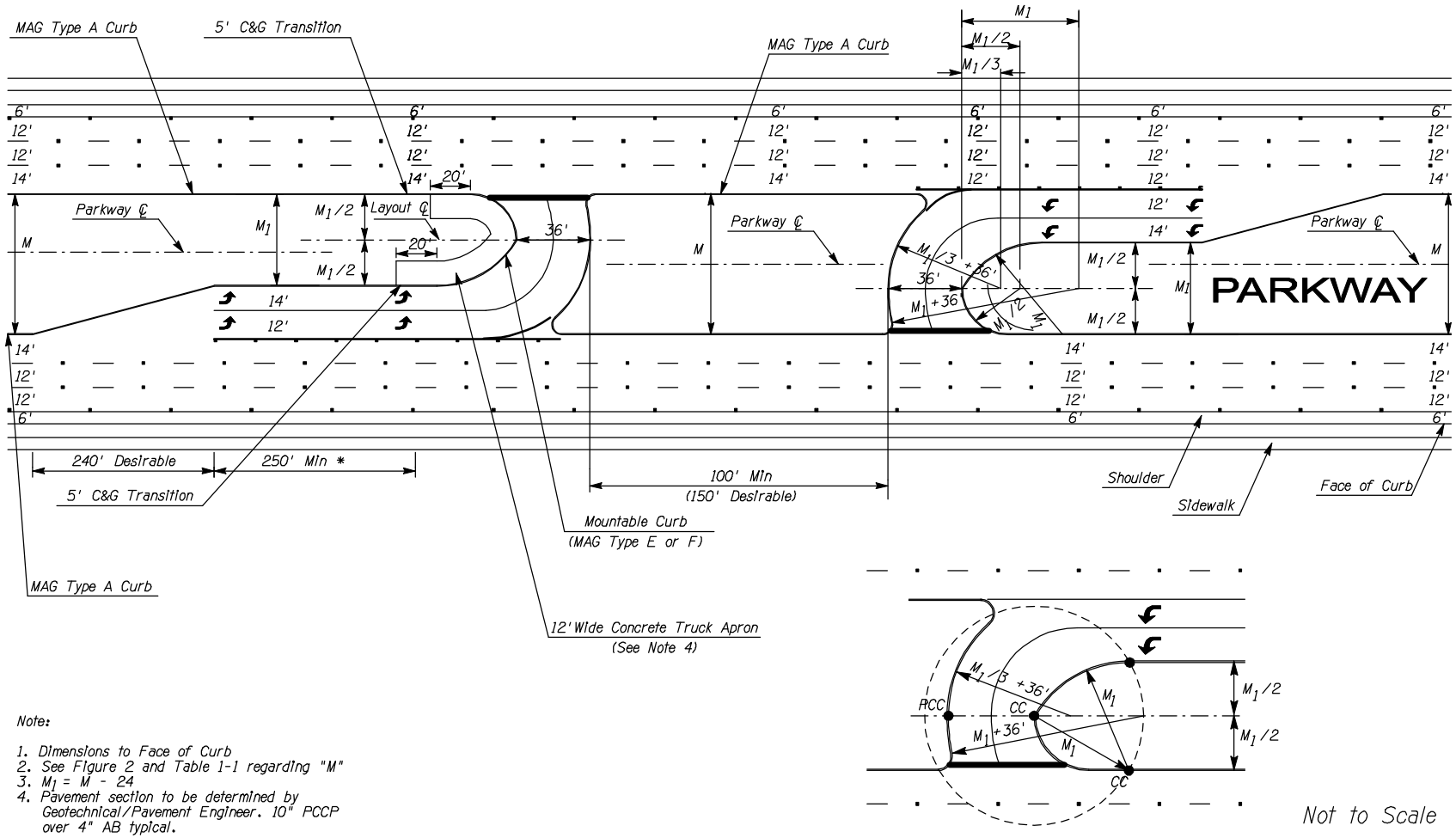

Not to Scale

Note:

1. Dimensions to Face of Curb
2. See Figure 2 and Table 1-1 regarding "M"
3. $M_1 = M - 24$
4. Pavement section to be determined by Geotechnical/Pavement Engineer. 10" PCCP over 4" AB typical.

GEOMETRICS FOR TYPICAL DUAL-LANE DIRECTIONAL CROSSOVERS

DATE: 08/08

SHEET NO: S-4

DESIGN FILE: n:\60040833\Prod\civ\AppenGm07.dgn

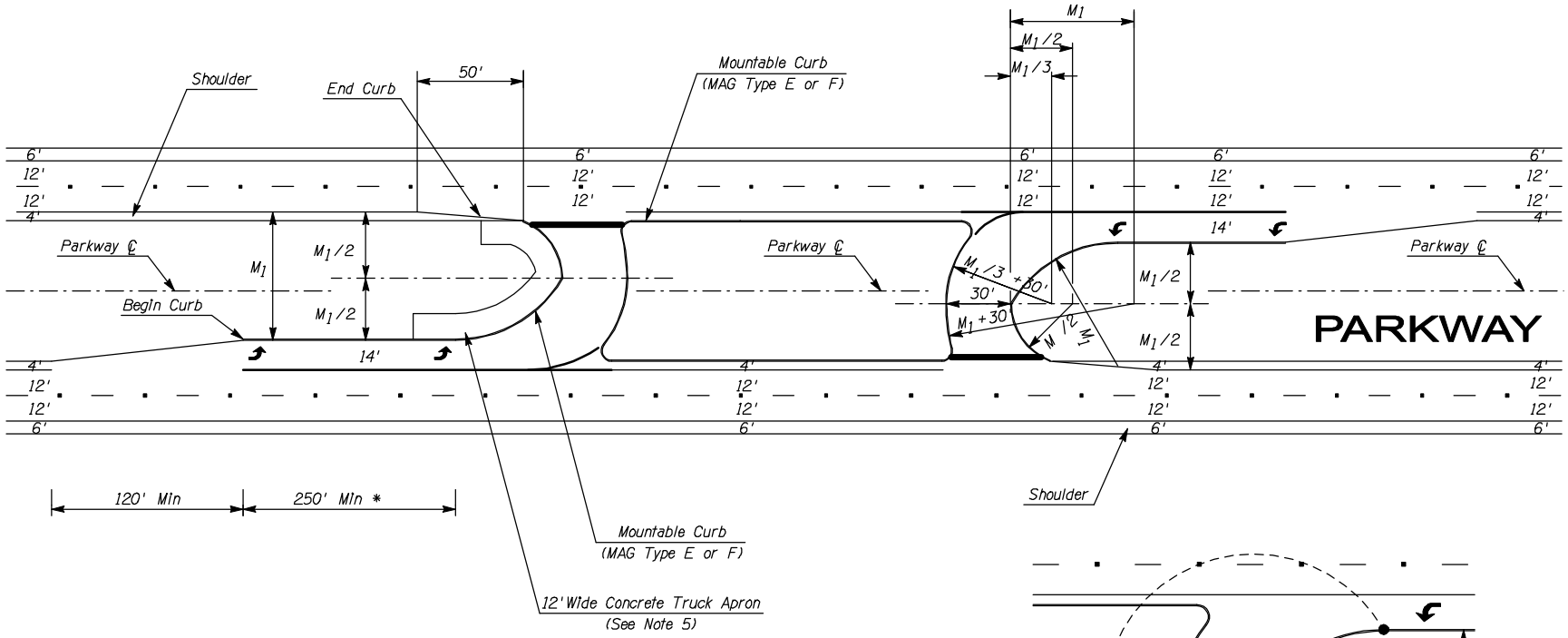

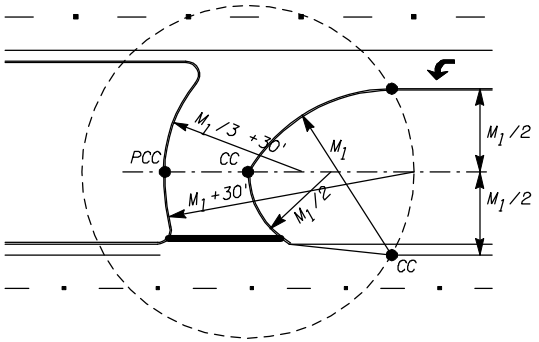

Note:
1. Dimensions to Face of Curb
2. Curb extends length of turn Bay and Around nose of Median
3. See Figure 2 and Table 1-1 regarding "M"
4. $M_1 = M - 10$
5. Pavement section to be determined by Geotechnical/Pavement Engineer. 10" PCCP over 4" AB typical.

* - LENGTH TO BE DETERMINED BY TRAFFIC ANALYSIS

Not to Scale

GEOMETRICS FOR TYPICAL RURAL SINGLE-LANE DIRECTIONAL CROSSOVERS

DATE: 08/08

SHEET NO: S-5

DESIGN FILE: n:\60040833\Prod\civ\AppenGm08.dgn

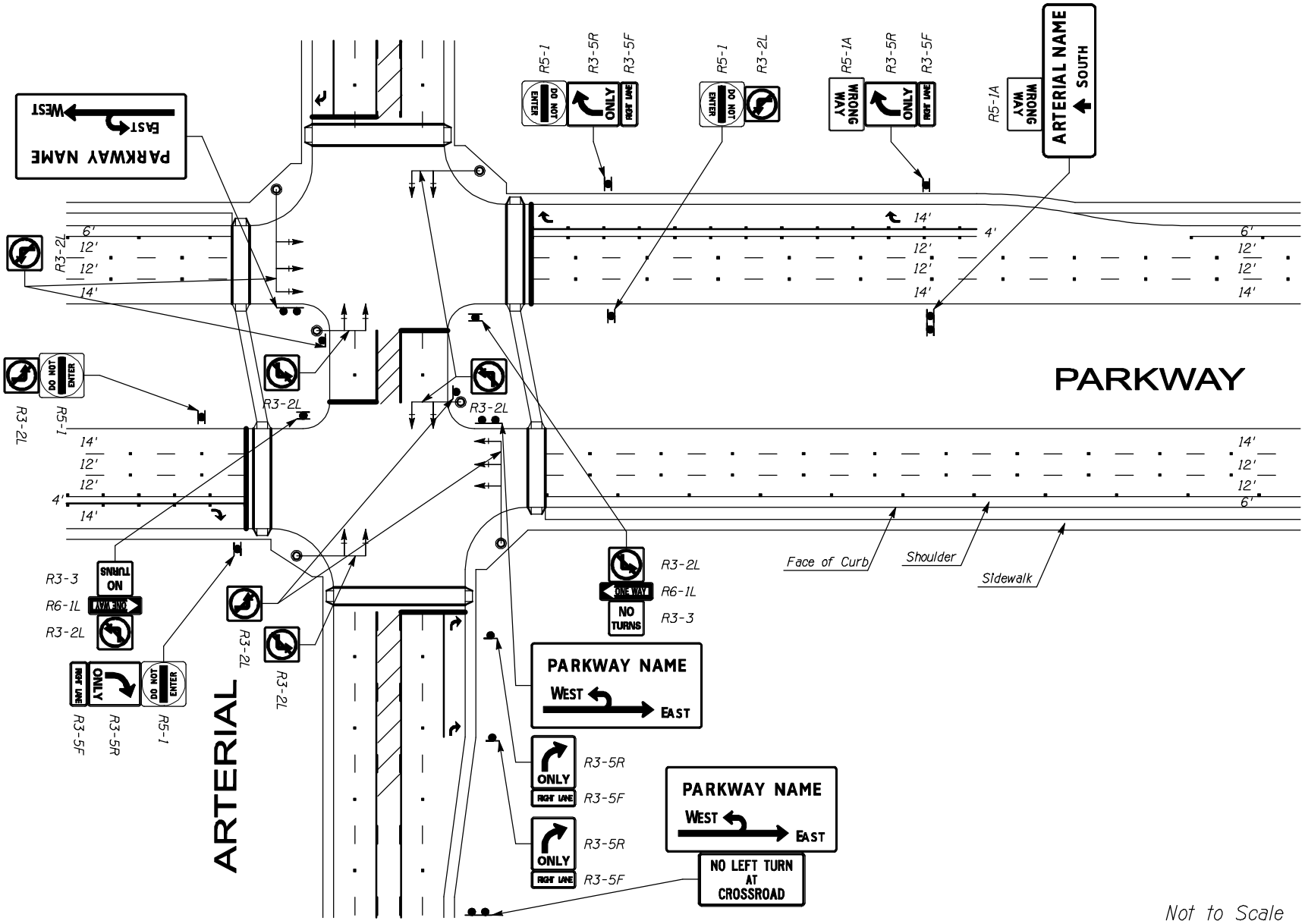

TYPICAL SIGNING FOR PARKWAY / ARTERIAL INTERSECTION

DATE: 08/08

SHEET NO: S-6

DESIGN FILE: n:\60040833\Prod\civ\AppenSp02.dgn

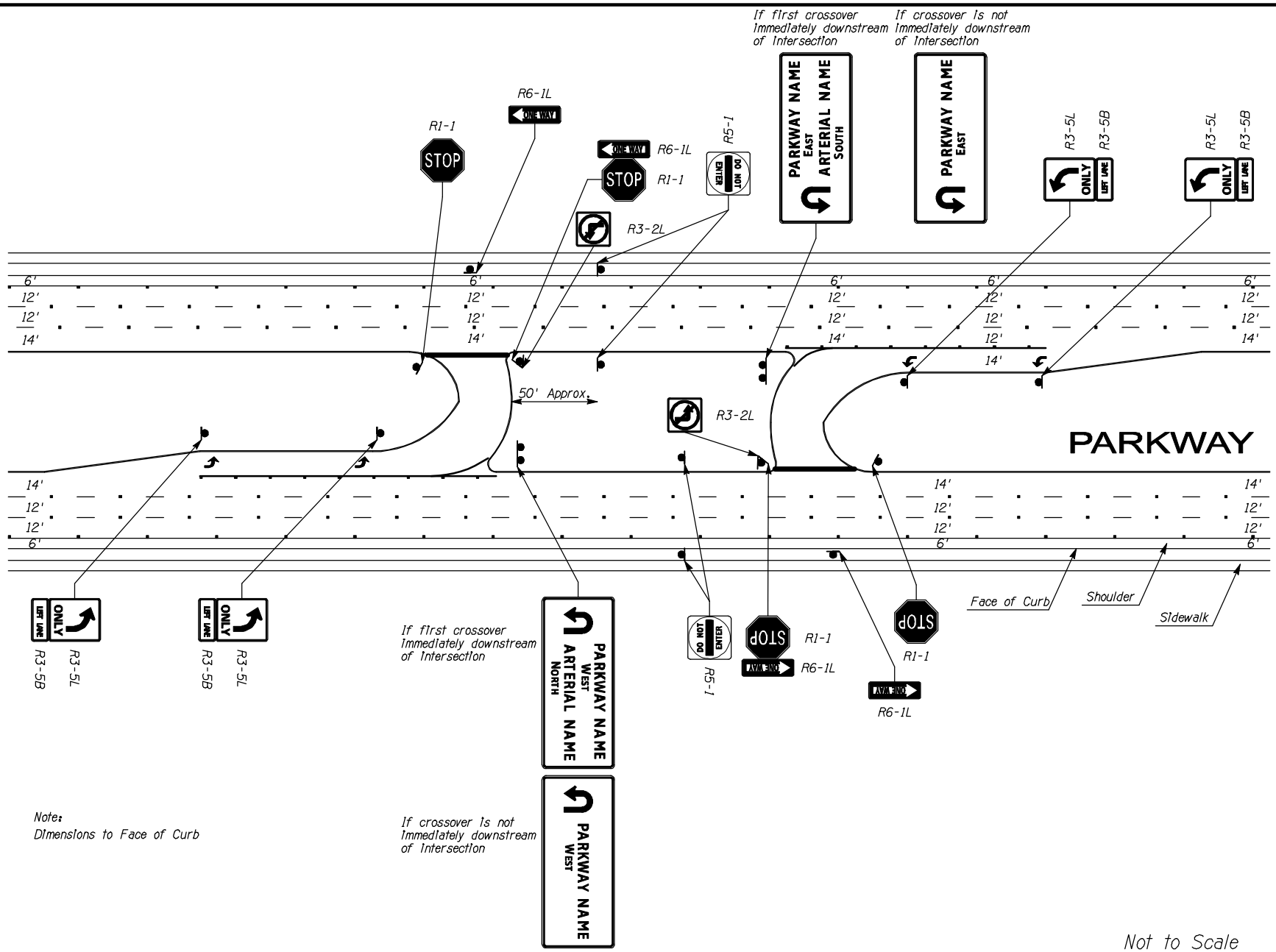

TYPICAL SIGNING FOR SINGLE-LANE STOP CONTROLLED CROSSOVER

DATE: 08/08

SHEET NO: S-7

DESIGN FILE: n:\60040833\Prod\civ\AppenSp03.dgn

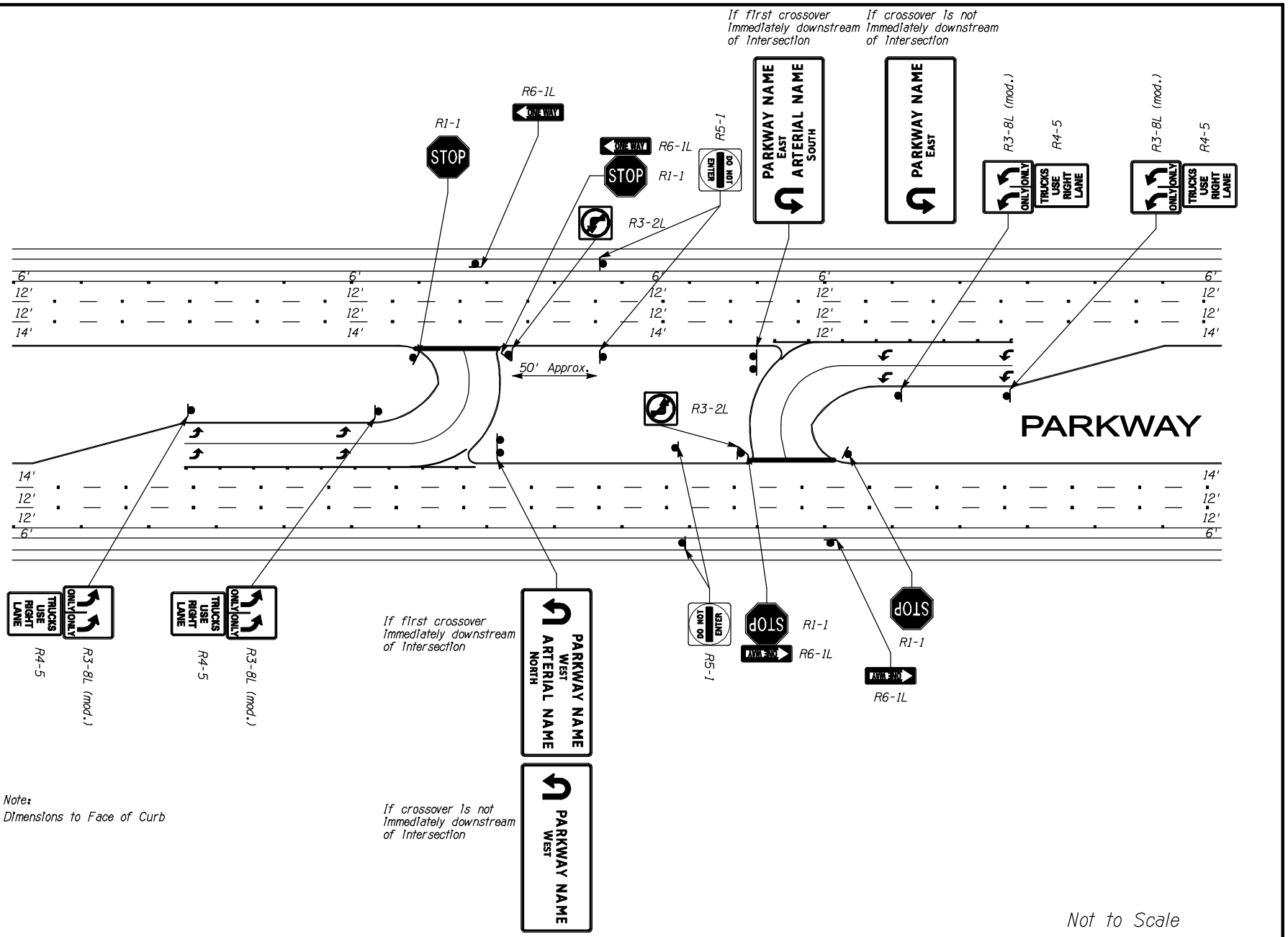

TYPICAL SIGNING FOR DUAL-LANE STOP CONTROLLED CROSSOVER

DATE: 08/08

SHEET NO: S-8

DESIGN FILE: n:\60040833\Prod\civ\AppenSp04.dgn

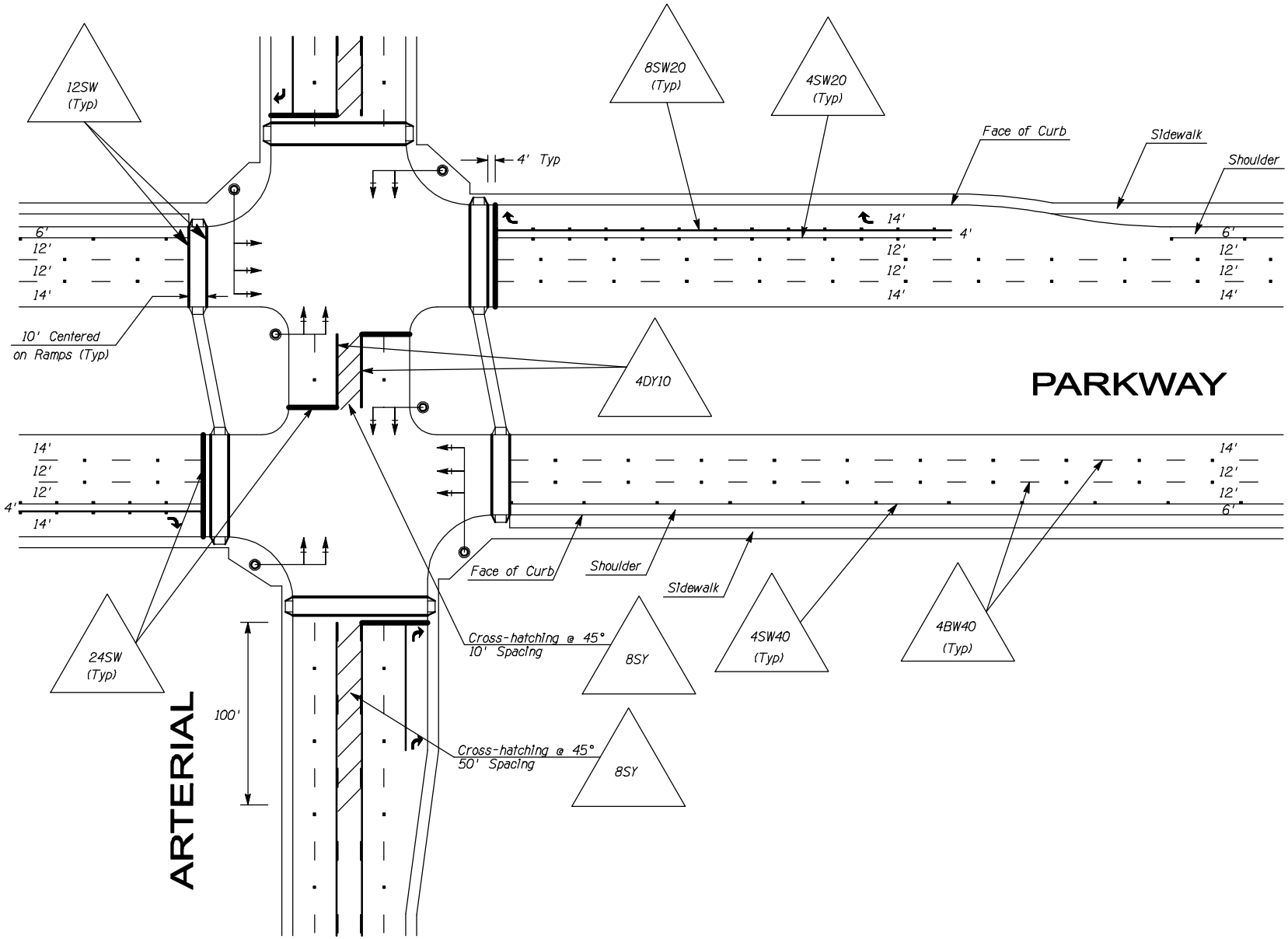

TYPICAL MARKINGS FOR PARKWAY / ARTERIAL INTERSECTION

DATE: 08/08

SHEET NO: S-9

DESIGN FILE: n:\60040833\Prod\civ\AppenPm02.dgn

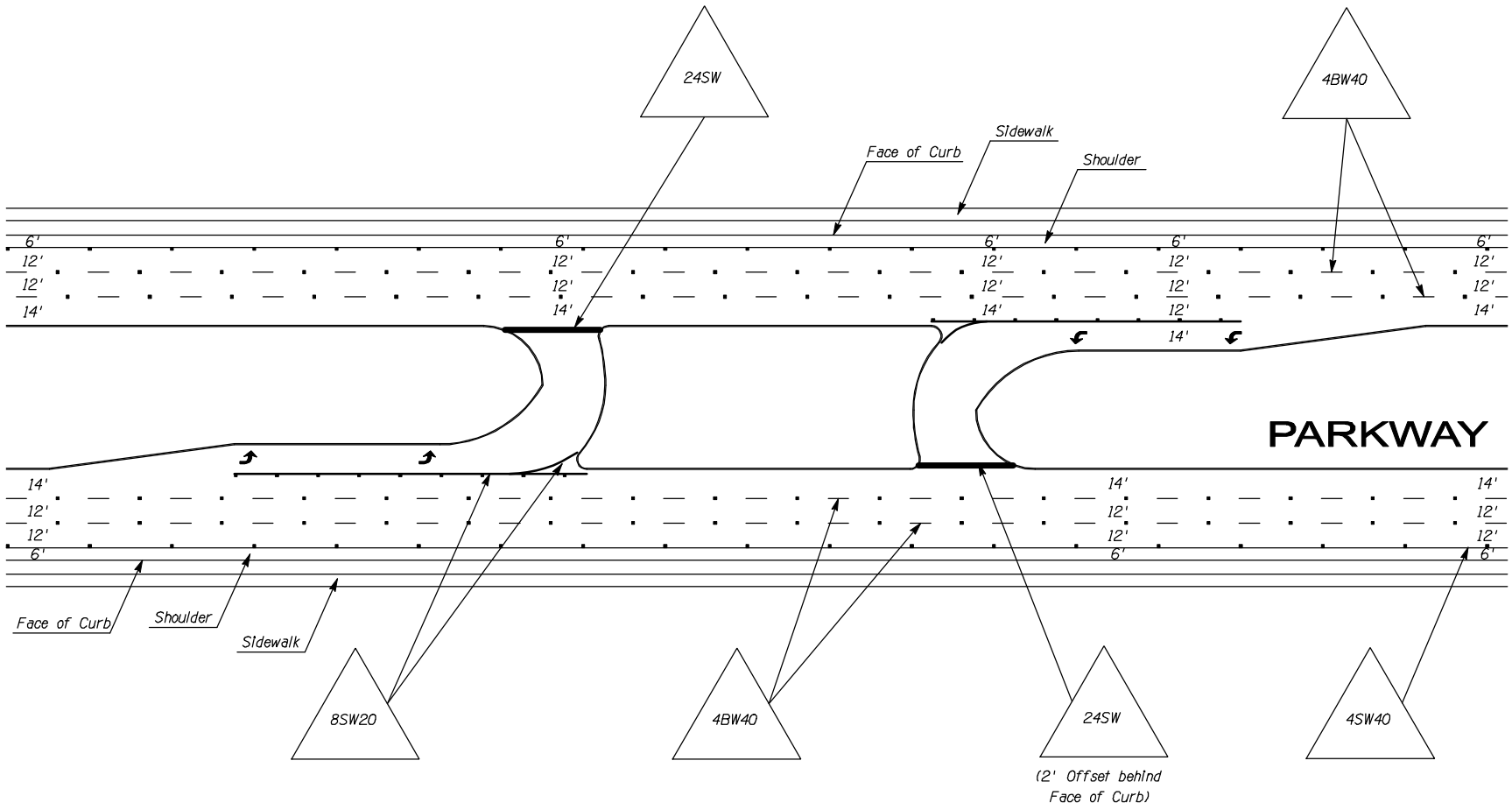

TYPICAL MARKINGS FOR SINGLE-LANE STOP CONTROLLED CROSSOVER

DATE: 08/08

SHEET NO: S-10

DESIGN FILE: n:\60040833\Prod\civ\AppenPm03.dgn

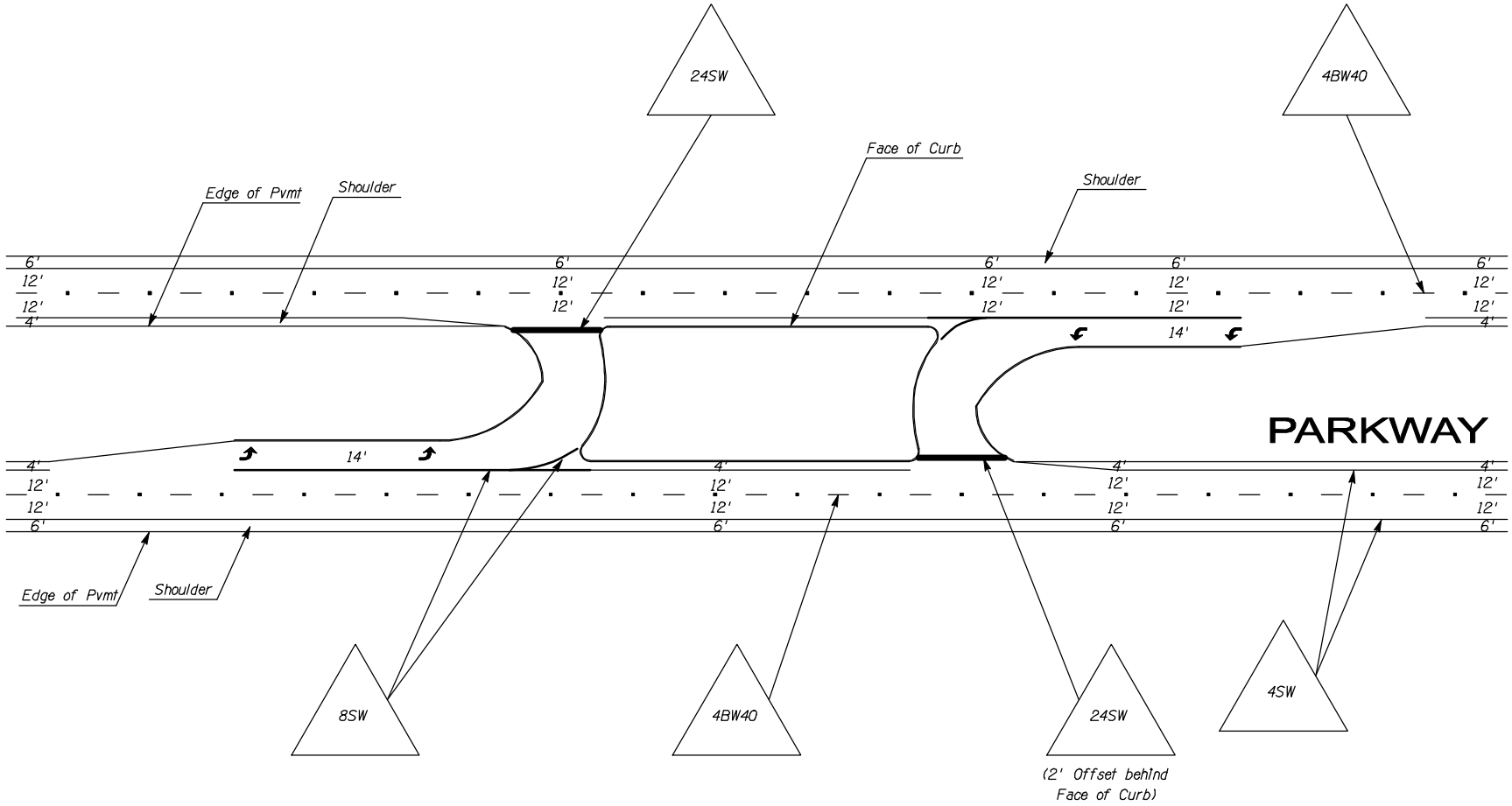

TYPICAL MARKINGS FOR RURAL SINGLE-LANE STOP CONTROLLED CROSSOVER

DATE: 08/08

SHEET NO: S-11

DESIGN FILE: n:\60040833\Prod\civ\AppenPm05.dgn

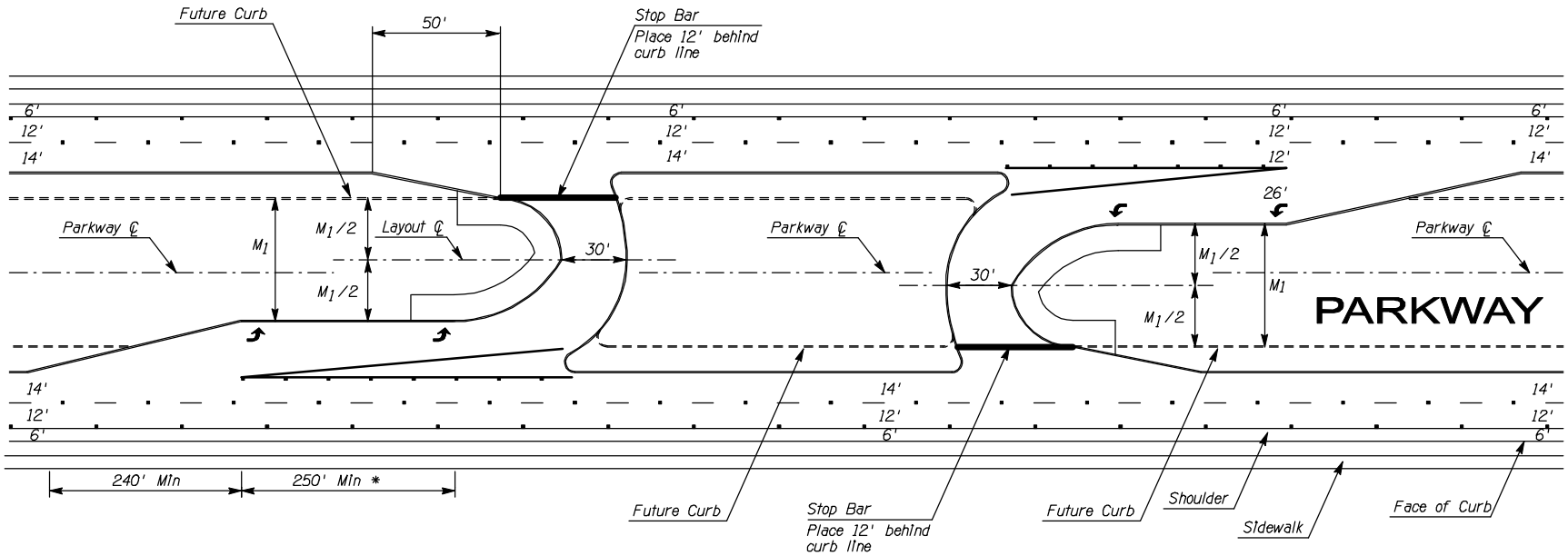

Note:
Dimensions to Face of Curb

* - LENGTH TO BE DETERMINED BY TRAFFIC ANALYSIS

Not to Scale

INTERIM URBAN DIRECTIONAL CROSSOVER

DATE: 08/08

SHEET NO: S-12

DESIGN FILE: n:\60040833\Prod\civ\AppenGm06.dgn